Chapter 4 Maintenance

4.1 Unit profile and list of parts

4.1.1 Unit profile

4.1.1.1 **LSQW(R) F40M/B** Unit profile

LSQW(R) F40M/B Unit profile

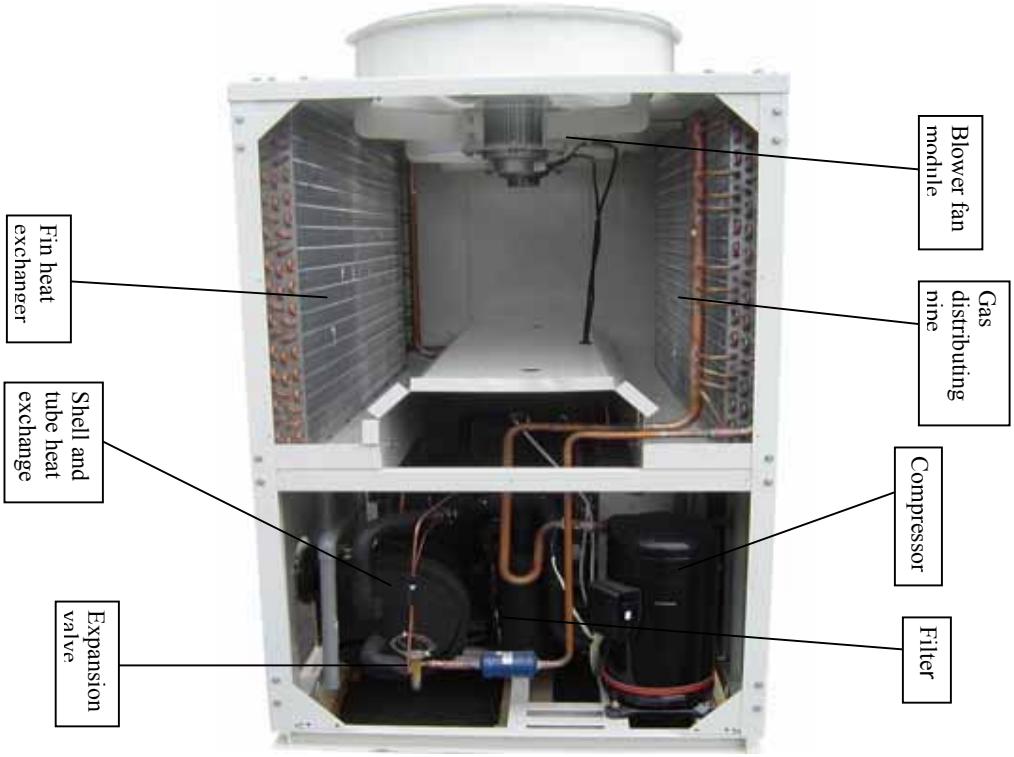

LSQWF40M/B Unit profile drawing

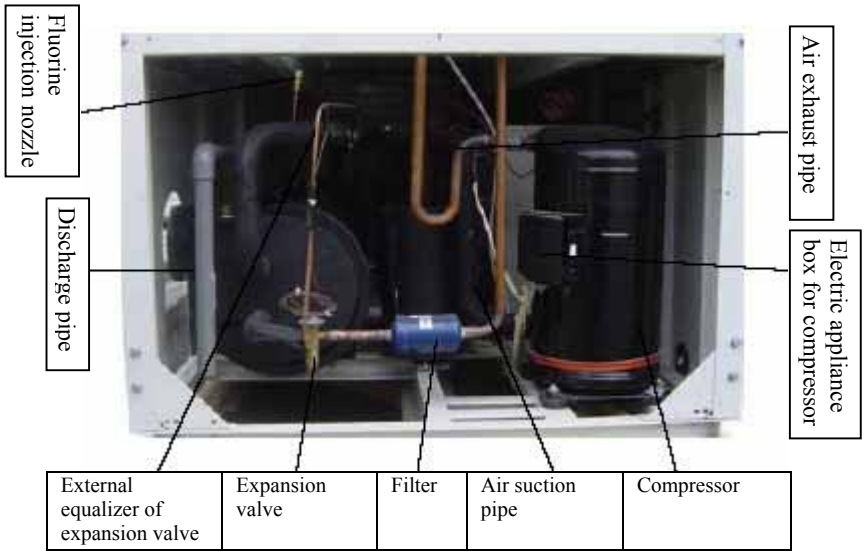

LSQWF40M/B Unit pipe line drawing

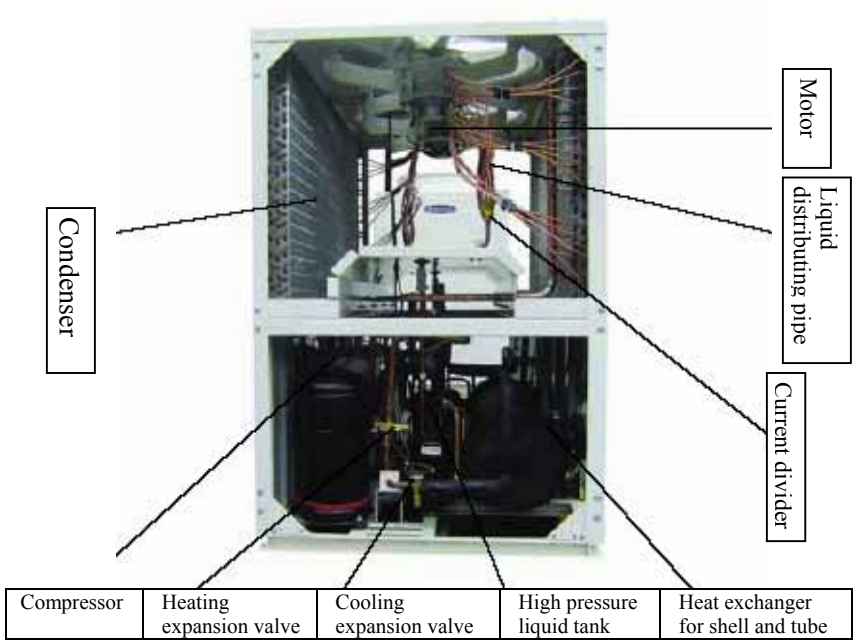

Detailed drawing 2 of unit pipe line **LSQWRF40M/B**

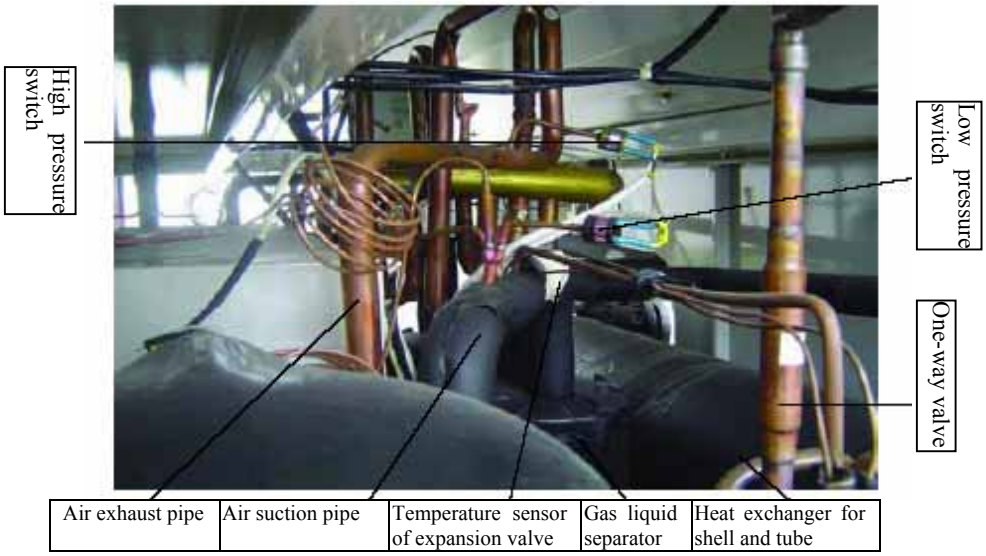

Detailed drawing 3 of unit pipe line **LSQWF40M/B**

High-pressure liquid accumulate tank	Drying Filter	Anchor bolt of compressor

Detailed drawing 4 of unit pipe line **LSQWF40M/B**

Connecting tube of low-pressure gage	Connecting tube of high-pressure gage

4.1.1.2 **LSQW(R)F60M/B** Unit profile

LSQWF60M/B Unit pipe line drawing

SQWRF60M/B Unit pipe line drawing **1**

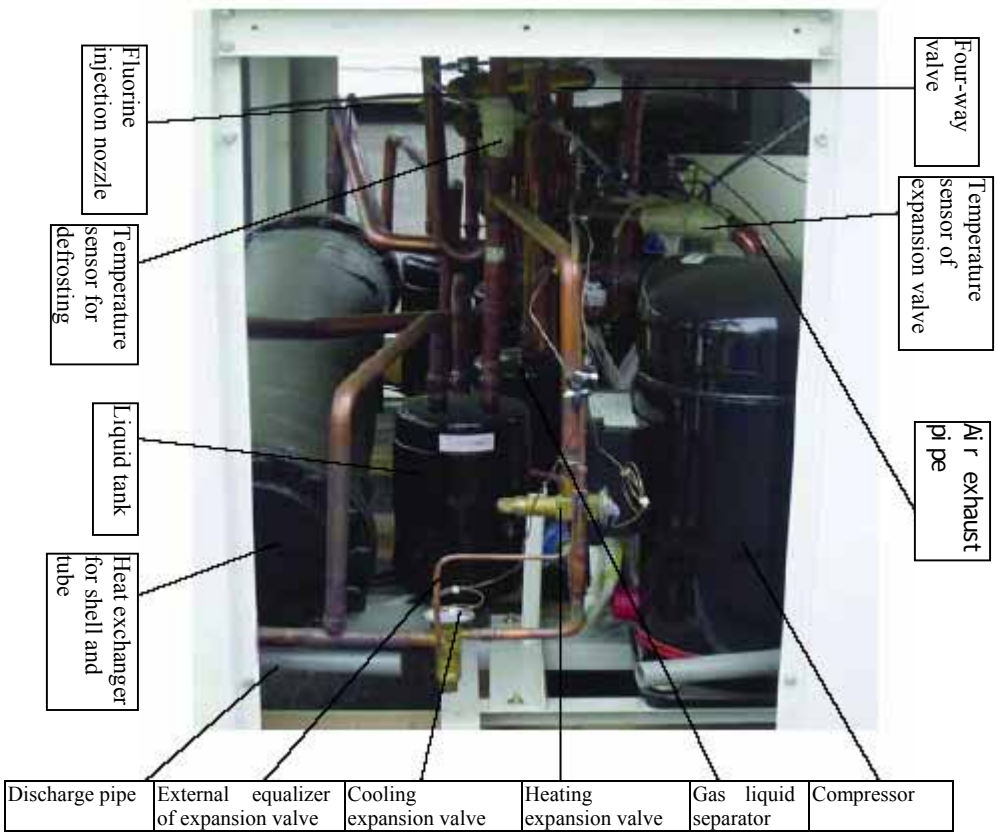

LSQWRF60M/B Unit pipe line drawing**2**

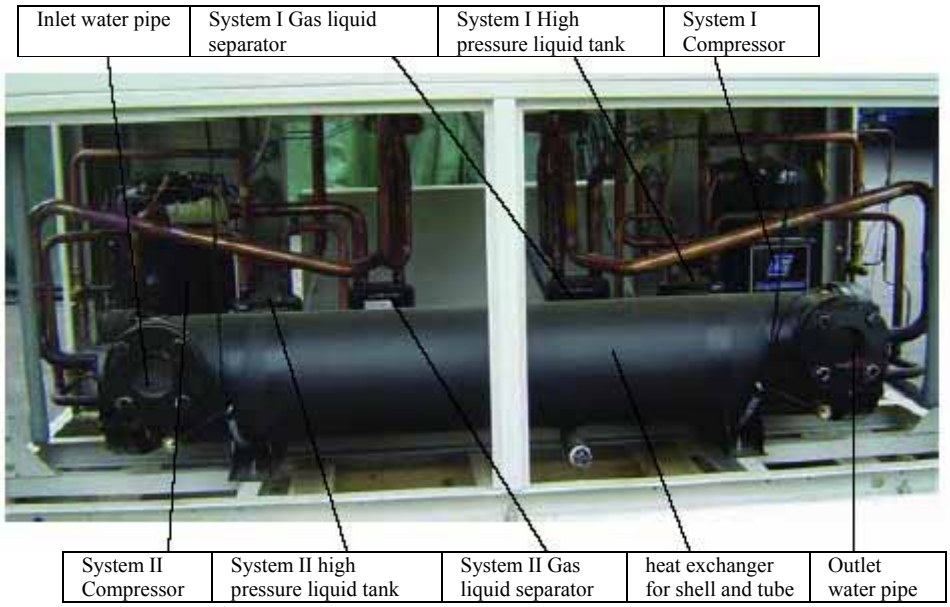

4.1.1.3 **LSQW(R)F130M/B** Unit profile

LSQWF130M/B Unit pipe line drawing

Compressor	air suction pipe	Gas liquid separator	Filter	Balance pipe of expansion valve	expansion valve

Detailed drawing **of unit** pipe line **LSQWF130M/B**

Compressor	air exhaust pipe	air suction pipe	Gas liquid separator	Fluorine injection nozzle	heat exchanger for shell and tube

LSQWRF130M/B Unit pipe line drawing

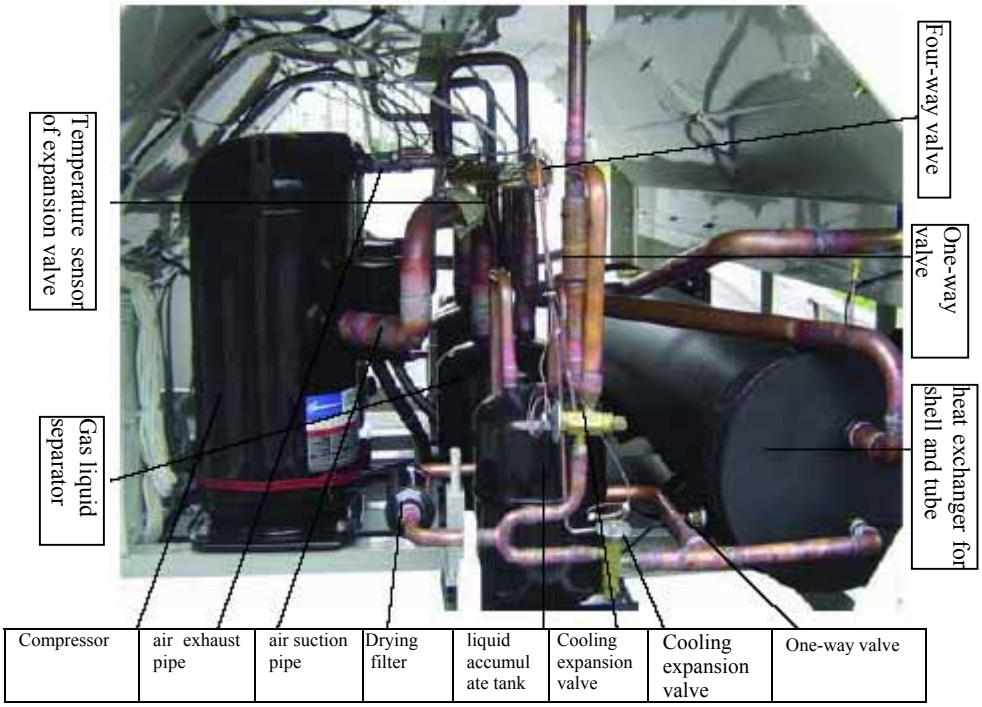

Detailed drawing of compressor **LSQWRF130M/B**

Detailed drawing of blower fan module **LSQWRF130M/B**

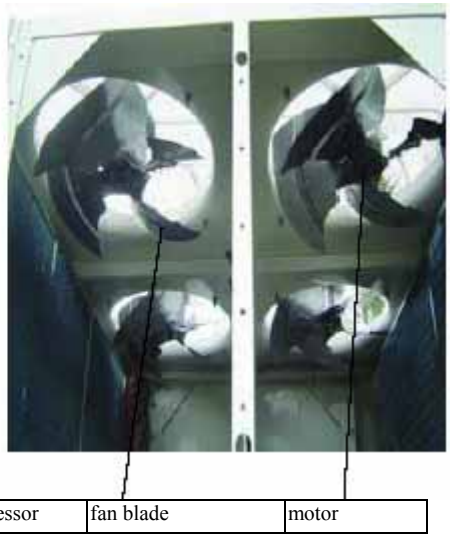

Detailed drawing of liquid distributor of **LSQWRF130M/B**

system IDetailed drawing of liquid distributor of **LSQWRF130M/B System II**

4.1.1.4 Structure of electrical part

LSQW(R)F40M/B Structure of electrical part

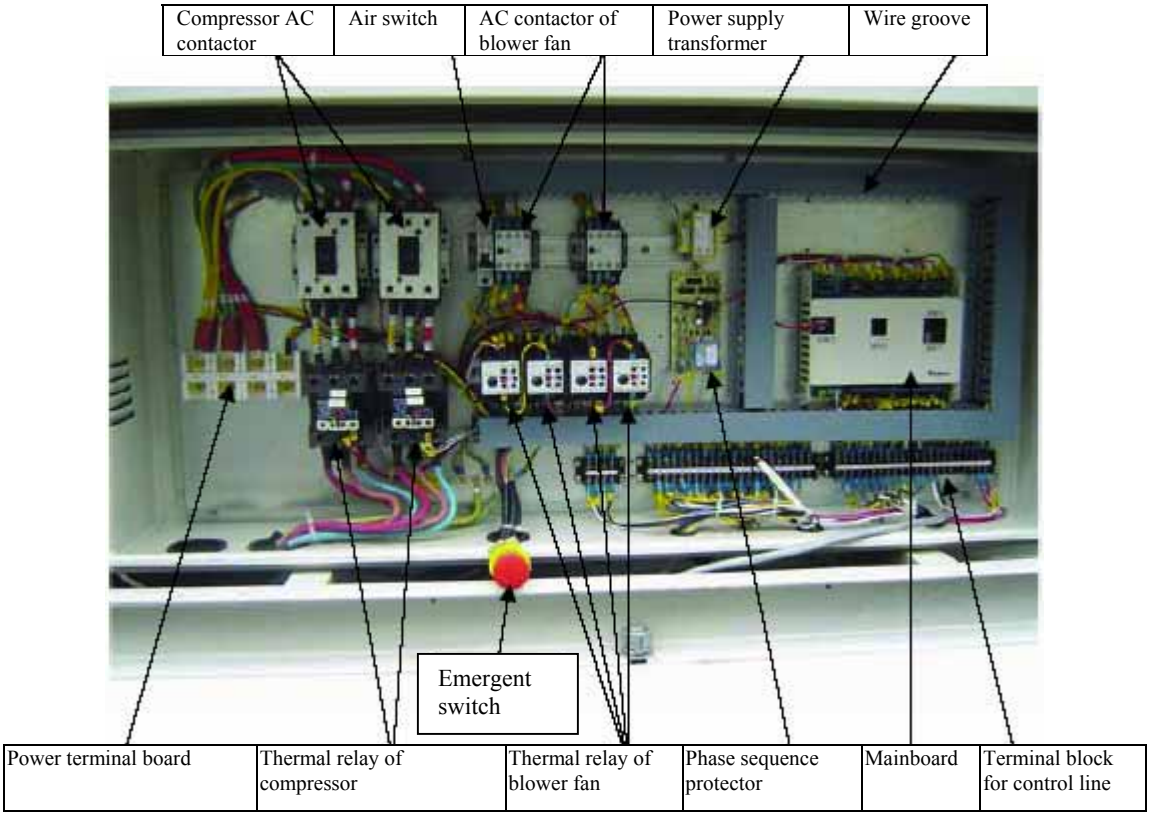

LSQW(R) F60M/B, **LSQW(R) F80M/B** Structure of electrical part

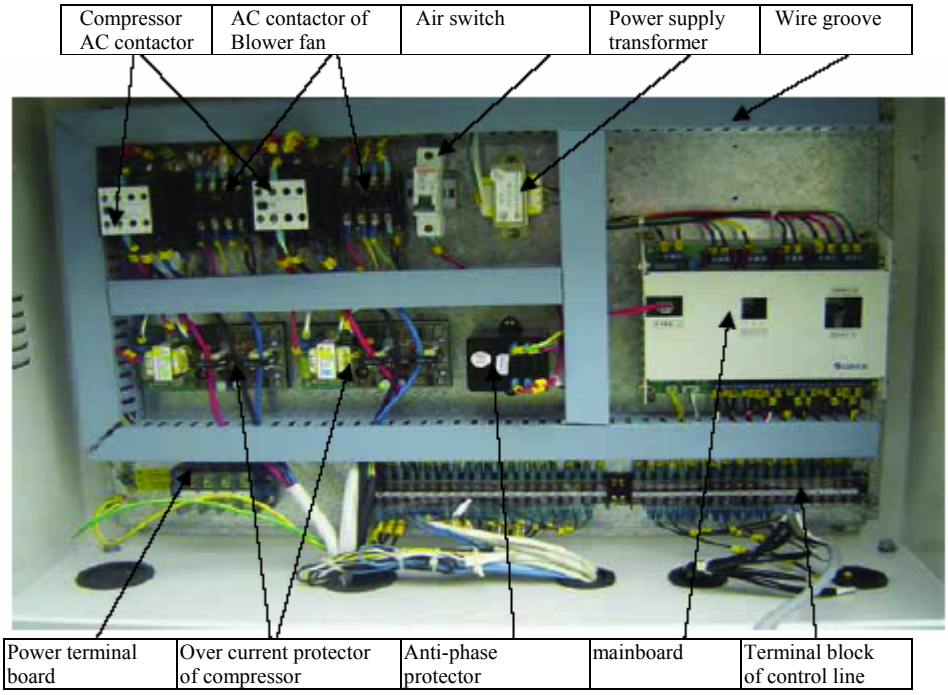

LSQW(R) F130M/B Structure of electrical part

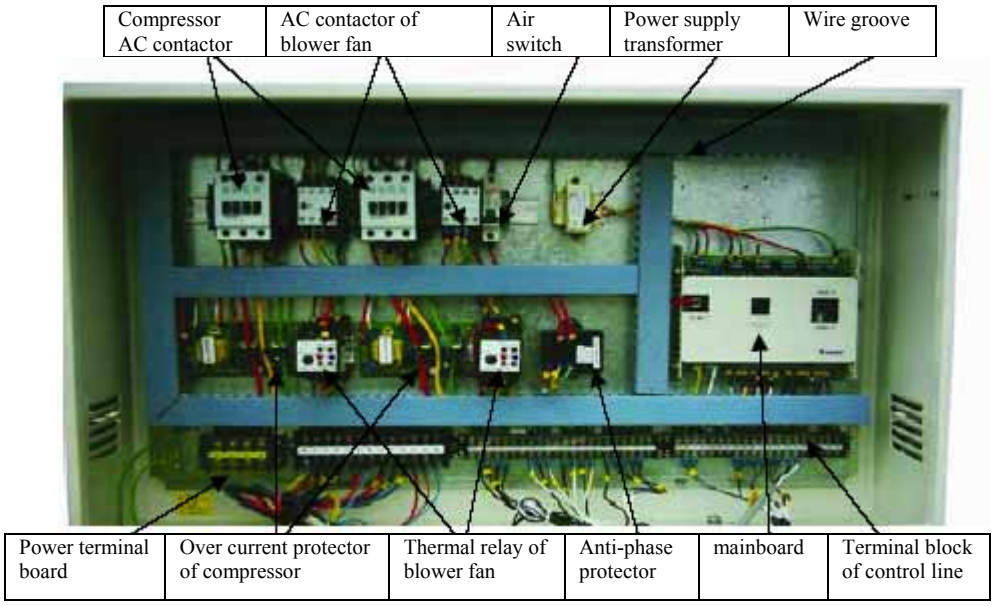

4.1.2 Spare parts list

4.1.2.1 **LSQWF40M/B** List of main parts and components

Serial No	Material code	Name	Drawing No.	Quantity
1	00120040	Compressor and fittings ZR94KC-TFD-522		2
2	01038008	shell and coil evaporator	LSQWRF40MB.03010000	1
3	01108013	Condenser part	LSQWF40MB.04000000	2
4	10518601	fan blade(outdoor unit)	FG25 (O) 03000002	2
5	15018606	motor SW300A	FG25 (O) 03000001	2
6	01378002	Wind bar	LSQWRF40MB.01000026	2
7	07130309	Heating expansion valve TDEX6ODF 5/8X7/8 /TX6-H14	7130309	2
8	07228003	Gas liquid separator	RF60M.00000015b	2
9	07210021	Filter	RF60M.10170002b	2
10	49020003	High pressure gauge DN63-1/35bar/SR-3.8 (with oil)	RF60M.00000009b	2
11	49020002	Low pressure gauge DN63-1/15bar/SR-1.8 (with oil)	RF60M.00000008b	2
12	46020005	High and low pressure switch YK-0.05/0.15MPa	TY.12.04.02 (01)	2
13	460200044	High and low pressure switch YK-0.25/0.3MPa	TY.12.04.02 (04)	2
14	70818006	Closed-type loosening and tightening lock KQ97-2		2
15	30222001	Mainboard1 Z223		1
16	46020114	Over current protector 22A		2
17	44010236	AC contactor GC3-22/11-KK		2
18	44010199	AC contactor LC1K0910M7		2
19	45020203	Single-phase air switch C45N.6A QF1		1
20	43110209	Power supply transformer SC39		1
21	45010010	emergent switch		1
22	46020056	Phase sequence protector ZP101		1
23	61210002	bar code	91227	4

4.1.2.2 **LSQWRF40M/B** List of main parts and components

Serial No	Material code	Name	Drawing No.	Quantity
1	00120040	Compressor and fittings ZR94KC-TFD-522		2
2	01038008	shell and coil evaporator	LSQWRF40MB.03010000	1
3	01108013	Condenser part	LSQWRF40MB.04000000	2

4	10518601	fan blade(outdoor unit)	FG25 (O) 03000002	2
5	15018606	motor SW300A	FG25 (O) 03000001	2
6	01378002	Wind bar	LSQWRF40MB.01000026	2
7	07130309	Heating expansion valve TDEX6ODF 5/8X7/8 /TX6-H14	7130309	2
8	07138216	Thermostatic expansion valveTDEX4ODF		2
9	07228007	High pressure liquid tank	LSQWRF40MB.05000002	2
10	07228003	Gas liquid separator	RF60M.00000015b	2
11	43000407	four-way valve(8 P)(STF-0714)	TY.00.376	1
12	430004009	Four-way valve and fittings		1
13	07210021	Filter	RF60M.10170002b	2
14	49020003	High pressure gauge DN63-1/35bar/SR-3.8 (with oil)	RF60M.00000009b	2
15	49020002	Low pressure gauge DN63-1/15bar/SR-1.8 (with oil)	RF60M.00000008b	2
16	46020005	High and low pressure switch YK-0.05/0.15MPa	TY.12.04.02 (01)	2
17	460200044	High and low pressure switch YK-0.25/0.3MPa	TY.12.04.02 (04)	2
18	70818006	Closed-type loosening and tightening lock KQ97-2		2
19	30222001	Mainboard1 Z223		1
20	46020114	Over current protector 22A		2
21	44010236	AC contactor GC3-22/11-KK		2
22	44010199	AC contactor LC1K0910M7		2
23	45020203	Single phase air switch C45N.6A QF1		1
24	43110209	Power supply transformer SC39		1
25	45010010	Emergent switch		1
26	46020056	Phase sequence protector ZP101		1
27	61210002	bar code	92121	4

4.1.2.3 **LSQWF60M/B** List of main parts and components

Serial No	Material code	Name	Drawing No.	Quantity
1	00100049	Compressor and fittings ZR144KC-TFD-522		2
2	01038007	shell and coil evaporator 16RT	LSQWRF60MB.03010000	1
3	01108017	Condenser part	LSQWF60MB.04000000	2
4	10358001	fan blade	LSQWRF80MB.02020001	1
5	15018003	Motor SW1150A	LSQWRF80MB.02020003	2

6	01378001	Wind bar	LSQWRF80MB.01020016	2
7	07130307	Cooling expansion valve TDEX7.5ODF5/8×7/8		1
8	07228003	Gas liquid separator	RF60M.00000015b	2
9	07210021	Filter	RF60M.10170002b	2
10	49020003	High pressure gauge DN63-1/35bar/SR-3.8 (with oil)	RF60M.00000009b	2
11	49020002	Low pressure gauge DN63-1/15bar/SR-1.8 (with oil)	RF60M.00000008b	2
12	46020003	Pressure protection switch 3.0/2.4Mpa	TY.12.01/02	2
13	460200044	High pressure switch YK-0.25/0.3MPa	TY.12.04.02 (04)	2
14	70818006	Closed-type loosening and tightening lock KQ97-2		2
15	44020356	ThermorelayGR3-63-1F 3.2~5A 4A		2
16	30222001	Mainboard1 Z223		1
17	46020114	Over current protector 26.4A/UO-10-26		2
18	44010235	AC contactor GC3-38/22		2
19	44010229	AC contactor GC3-12/01KK/LC1D1201M7C/3TF41#		2
20	45020203	Single-phase air switch C45N.6A QF1		1
21	43110209	Power supply transformer SC39		1
22	45010010	Emergent switch		1
23	46020052	Anti-phase protector		1
24	61210002	bar code	91113	5

4.1.2.4 **LSQWRF60M/B** List of main parts and components

Serial No	Material code	Name	Drawing No.	Quantity
1	00100049	Compressor and fittings ZR144KC-TFD-522		2
2	01038007	shell and coil evaporator 16RT	LSQWRF60MB.03010000	1
3	01108011	Condenser part	LSQWRF60MB.04000000	2
4	10358001	fan blade	LSQWRF80MB.02020001	1
5	15018003	Motor SW1150A	LSQWRF80MB.02020003	2
6	01378001	Wind bar	LSQWRF80MB.01020016	2
7	07130307	Cooling expansion valve TDEX7.5ODF5/8×7/8		1
8	07130309	Heating expansion valve TDEX6ODF5/8×7/8		1
9	07228053	High-pressure liquid tank	LSQWRF60MB.05070000	2
10	07228003	Gas liquid separator	RF60M.00000015b	2
11	07210021	filter	RF60M.10170002b	2

12	430004061	four-way valve(10 P)(STF-0722)	TY.00.375 (01)	1
13	46020003	Pressure protection switch 3.0/2.4Mpa	TY.12.01/02	2
14	49020002	Low pressure gauge DN63-1/15bar/SR-1.8(with oil)	RF60M.00000008b	2
15	46020005	High and low pressure switch YK-0.05/0.15MPa	TY.12.04.02 (01)	2
16	460200044	High and low pressure switch YK-0.25/0.3MPa	TY.12.04.02 (04)	2
17	70818006	Closed-type loosening and tightening lock KQ97-2		2
18	30222001	Mainboard1 Z223		1
19	44020356	ThermorelayGR3-63-1F 3.2~5A 4A		2
20	46020114	Over current protector 26.4A/UO-10-26		2
21	44010235	A/C contactor GC3-38/22		2
22	44010229	A/C contactor GC3-12/01KK/LC1D1201M7C/3TF41#		2
23	45020203	Single phase air switch C45N.6A QF1		1
24	43110209	Power supply transformer SC39		1
25	45010010	Emergent switch		1
26	46020052	Anti-phase protector		1
27	61210002	bar code	92113	5

4.1.2.5 **LSQWF80M/B** List of main parts and components

Serial No	Material code	Name	Drawing No.	Quantity
1	00108008	Compressor and fittings ZR19M3-TWD-522		2
2	01038006	shell and coil evaporator	LSQWRF80MB.03010000	1
3	01108015	Condenser part	LSQWRF80MB.04000000	2
4	10358001	fan blade	LSQWRF80MB.02020001	1
5	15018003	Motor SW1150A	LSQWRF80MB.02020003	2
6	01378001	Wind bar	LSQWRF80MB.01020016	2
7	07138304	Thermostatic expansion valveTDEX12.5ODF		1
8	07228008	Gas liquid separator	LSQWRF80MB.05000001	2
9	07210021	filter	RF60M.10170002b	2
10	49020003	High pressure gauge DN63-1/35bar/SR-3.8 (with oil)	RF60M.00000009b	2
11	49020002	Low pressure gauge DN63-1/15bar/SR-1.8 (with oil)	RF60M.00000008b	2
12	46020003	Pressure protection switch 3.0/2.4Mpa	TY.12.01/02	2
13	460200044	High and low pressure switch YK-0.25/0.3MPa	TY.12.04.02 (04)	2
14	70818006	Closed-type loosening and tightening lock KQ97-2		2

15	30222001	Mainboard1 Z223		1
16	44020356	ThermorelayGR3-63-1F 3.2~5A 4A		4
17	46020120	Over current protector HD-32-22		2
18	44010235	AC contactor GC3-38/22		2
19	44010229	AC contactor GC3-12/01KK/LC1D1201M7C/3TF41#		2
20	45020203	Single phase air switch C45N.6A QF1		1
21	43110209	Power supply transformer SC39		1
22	45010010	Emergent switch		1
23	46020052	Anti-phase protector		1
24	61210002	bar code	92156	4

4.1.2.6 LSQWRF80M/B List of main parts and components

Serial No	Material code	Name	Drawing No.	Quantity
1	00108008	Compressor and fittings ZR19M3-TWD-522		2
2	01038006	shell and coil evaporator	LSQWRF80MB.03010000	1
3	01108014	Condenser part	LSQWRF80MB.04000000	2
4	10358001	fan blade	LSQWRF80MB.02020001	1
5	15018003	Motor SW1150A	LSQWRF80MB.02020003	2
6	01378001	Wind bar	LSQWRF80MB.01020016	2
7	07138304	Thermostatic expansion valveTDEX12.5ODF		1
8	07138308	Thermostatic expansion valveTDEX11ODFΦ16×22		1
9	07228009	High-pressure liquid tank	LSQWRF80MB.05000002	2
10	07228008	Gas liquid separator	LSQWRF80MB.05000001	2
11	07210021	filter	RF60M.10170002b	2
12	43000408	Four-way valve CHV-1511	TY.00.369	2
13	49020003	High pressure gauge DN63-1/35bar/SR-3.8 (with oil)	RF60M.00000009b	2
14	49020002	Low pressure gauge DN63-1/15bar/SR-1.8 (with oil)	RF60M.00000008b	2
15	46020003	Pressure protection switch 3.0/2.4Mpa	TY.12.01/02	2
16	460200044	High and low pressure switch YK-0.25/0.3MPa	TY.12.04.02 (04)	2
17	70818006	Closed-type loosening and tightening lock KQ97-2		2
18	30222001	Mainboard1 Z223		1
19	44020356	ThermorelayGR3-63-1F 3.2~5A 4A		2
20	46020120	Over current protector HD-32-22		2

21	44010235	AC contactor GC3-38/22		2
22	44010229	AC contactor GC3-12/01KK/LC1D1201M7C/3TF41#		2
23	45020203	Single phase air switch C45N.6A QF1		1
24	43110209	Power supply transformer SC39		1
25	45010010	Emergent switch		1
26	46020052	Anti-phase protector		1
27	61210002	bar code	92157	4

4.1.2.7 LSQWF130M/B List of main parts and components

Serial No	Material code	Name	Drawing No.	Quantity
1	00100058	Compressor and fittings ZR300KC-TWD-522		2
2	01008153	shell and coil evaporator 35RT	LSQWRF120MB.03010000	1
3	01108056	Condenser part	LSQWF120MB.04000000	2
4	10358002	fan blade	LSQWRF60MB.02020001	4
5	15018002	Motor SW750B	LSQWRF60MB.02020003	4
6	01368007	Wind bar	LSQWRF120MB.01000026	4
7	07130349	Thermostatic expansion valve TX6-H17φ22X28		1
8	07228056	Gas liquid separator	LSQWRF120MB.05000010	2
9	07218155	Filter DCL307S (7/8)		2
10	46020003	Pressure protection switch 3.0/2.4Mpa	TY.12.01/02	2
11	49020002	Low pressure gauge DN63-1/15bar/SR-1.8 (with oil)	RF60M.00000008b	2
12	46020003	Pressure protection switch 3.0/2.4MPa	TY.02.01/02	1
13	460200044	High and low pressure switch YK-0.25/0.3MPa	TY.12.04.02 (04)	2
14	70818006	Closed-type loosening and tightening lock KQ97-2		2
15	30222006	Mainboard1 Z263	30222.006mx	1
16	44020356	Thermorelay GR3-63-1F 3.2~5A 4A		4
17	46020120	Over current protector HD-32-22		2
18	44010244	AC contactor GC3-63/22		2
19	44010229	AC contactor GC3-12/01KK/LC1D1201M7C/3TF41#		2
20	45020203	Single phase air switch C45N.6A QF1		1
21	43110209	Power supply transformer SC39		1
22	45010010	Emergent switch		1
23	46020056	Phase sequence protector ZP101		1
24	61210002	bar code	92156	4

4.1.2.8 LSQWRF130M/B List of main parts and components

Serial No	Material code	Name	Drawing No.	Quantity
1	00100058	Compressor and fittings ZR300KC-TWD-522		2
2	01008153	shell and coil evaporator 35RT	LSQWRF120MB.03010000	1
3	01108056	Condenser part	LSQWRF120MB.04000000	2
4	10358002	fan blade	LSQWRF60MB.02020001	4
5	15018002	Motor SW750B	LSQWRF60MB.02020003	4
6	01368007	Wind bar	LSQWRF120MB.01000026	4
7	07130349	Thermostatic expansion valve TX6-H17φ22X28		2
8	07130328	Thermostatic expansion valve TX6-H16 7/8X9/8 ODF		2
9	07228054	High-pressure liquid tank	LSQWRF120MB.05000002	2
10	07228056	Gas liquid separator	LSQWRF120MB.05000010	2
11	43000409	Four-way valve CHV-2501/VH1310A		2
12	07218155	Filter DCL307S (7/8)		2
13	46020003	Pressure protection switch 3.0/2.4Mpa	TY.12.01/02	2
14	49020002	Low pressure gauge DN63-1/15bar/SR-1.8 (with oil)	RF60M.00000008b	2
15	46020003	Pressure protection switch 3.0/2.4MPa	TY.02.01/02	1
16	460200044	High and low pressure switch YK-0.25/0.3MPa	TY.12.04.02 (04)	2
17	70818006	Closed-type loosening and tightening lock KQ97-2		2
18	30222006	Mainboard1 Z263	30222.006mx	1
19	44020383	ThermorelayLR2-D3359		2
20	44020356	ThermorelayGR3-63-1F 3.2~5A 4A		4
21	44010244	AC contactor GC3-63/22		2
22	44010229	AC contactor GC3-12/01KK/LC1D1201M7C/3TF41#		2
23	45020203	Single phase air switch C45N.6A QF1		1
24	43110209	Power supply transformer SC39		1
25	45010010	Emergent switch		1
26	46020056	Phase sequence protector ZP101		1
27	61210002	bar code	92165	4

4.2 Part disassembly process

4.2.1 Structural disassembly when LSQW（R）F60M/B, LSQW（R）F80M/B are repaired

The external structure of the unit is shown in the following two drawings：

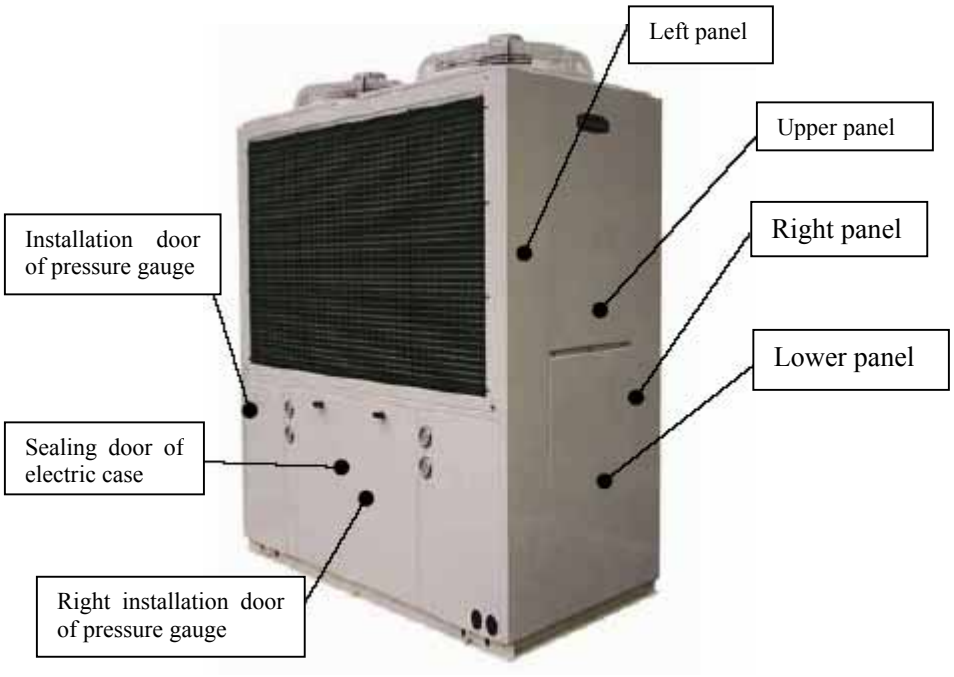

Inspection and repair of electrical appliance

When the electrical appliance is inspected, the sealing door of the electrical case must be disassembled first. The sealing door of the electrical case is fixed by two turning locks. Turn the lock to the “open” position to open the door. After it is open, the electric cabinet can be seen. The fixing method of the door of the electric cabinet is the same as that of the electrical case. The door of the electric cabinet can be opened via the same method and the circuit can be inspected. See the following two drawings.

Inspection and repair of the system

When the system is inspected, usually all you have to do is just to dismantle the two lower panels of the unit. The fixing bolt of the lower panel of the system is located in the gap between the upper panel and the lower panel. Remove the bolt and pull the lower panel outwards and up wards to open it. The fixing bolt of the upper panel is on the top of the unit and the dismantling method is similar.

The left panel and the right panel can be dissembled if necessary when the pipeline system is inspected. The upper panel and the lower panel must be dismantled first in order to dismantle the left panel and the right panel. The bolts fixed in the post and the top cover and the tapping screws connected to the wind bar are dismantled first. Then the left and right panels are pulled upwards and dismantled. If necessary, the installation door and the right door of the pressure gauge on the front side of the unit and the left and right evaporators on the back of the unit can be dismantled. All of the connecting bolts of these four parts are located at the corresponding base plates of the unit.

4.2.2 Structural disassembly when LSQW(R) F40M/B is inspected and repaired

The external structure of the unit is shown in the following two drawings：

Inspection and repair of electrical appliance

When the electrical appliance is inspected, the sealing door of the electrical case must be disassembled first. The sealing door of the electrical case is fixed by two turning locks. Turn the lock to the “open” position to open the door. After it is open, the electric cabinet can be seen. The door of the electric cabinet is fastened to the cabinet body by two buckles on the left and the right. Pull the buckles forward to take down the door of the electric cabinet.

Inspection and repair of the system

Usually, when the system is inspected and repaired, all you have to do is to dismantle the left and right panels of the unit. The two sides, i.e. the upper part of the panel are connected by the tapping screws. Remove the screws and then pull the left and right panels upwards to dismantle them. If necessary, the protection door 1 and the protection door of the shell and tube can be dismantled. Their fixing bolts are all connected to the base plates under the parts.

4.2.3 Structural disassembly when LSQW(R) F130M/B is inspected and repaired

The external structure of the unit is shown in the following two drawings：

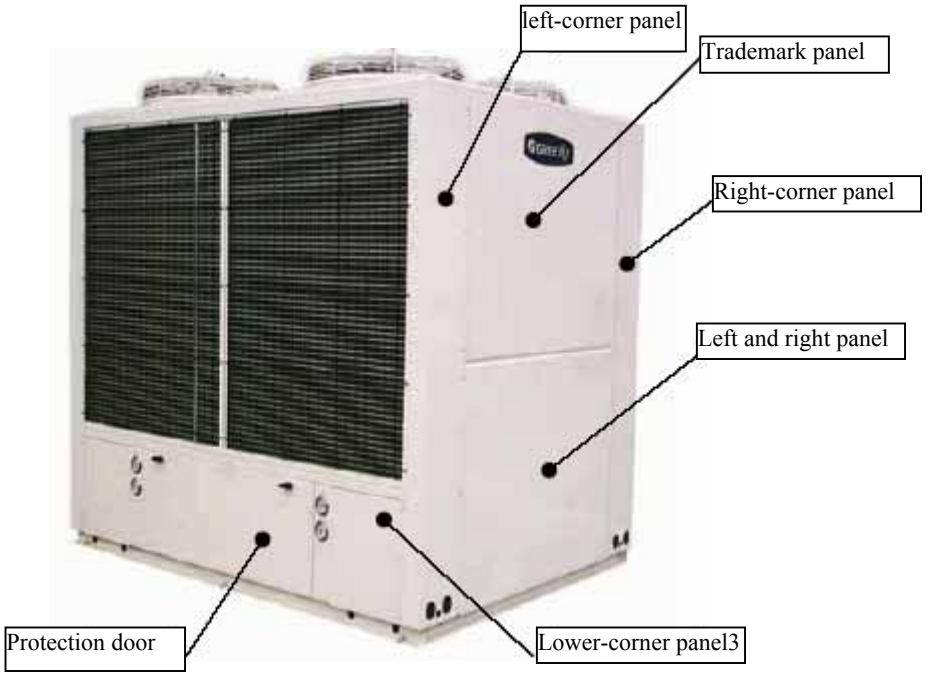

Inspection and repair of electrical appliance

When the electrical appliance is inspected, the protection door must be dismantled first. The protection door is fixed by two turning bolts. The dismantling method of the protection door and the door of the electric cabinet is the same as that of **LSQW(R) F60M/B**. Please refer to the description above.

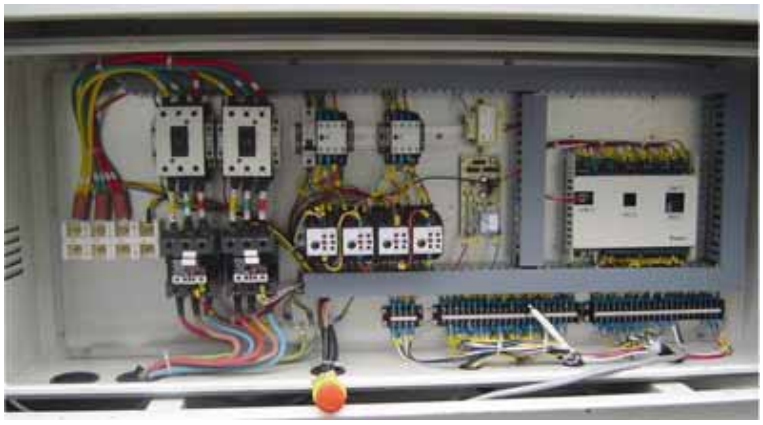

Inspection and repair of the system

Usually, when the system is inspected and repaired, all you have to do is to dismantle the left and right panels of the unit. All sides of the left and right panels are connected to the frame of the unit by the tapping screws. Remove the screws and then pull the left and right panels upwards to dismantle them. If the gas distributing pipe and the liquid distributing pipe need to be inspected, the left-corner and right-corner panels must be dismantled. Before this the trademark panel must be dismantled first. The connecting method of the trademark panel is similar to that of the left and right panels and the dismantling methods are the same. The tapping screws between the upper part of the left-corner and right-corner panels and the top cover and the tapping screws at the sides that are connected to the wind bar are dismantled and then pulled upwards to dismantle them.

4.3 Maintenance

4.3.1 Cleaning of refrigerated water system

The cleaning of the refrigerated water system is to clean the biological slime, corrosion products and other sediments on the heat exchange surface of the evaporator, on the inner wall of the refrigerated water pipe, on the inner wall of the blower fan pipe coil and inside the air conditioning system and equipments.

Both physical cleaning and chemical cleaning can be adopted to clean the equipments and the pipes of the refrigerated water system. The chemical cleaning operation is convenient and has good cleaning effect, and the equipment can be cleaned without shutdown, so in most cases the chemical cleaning method is used. Now the two methods are described as follows:

（1） Physical cleaning

For the physical cleaning, the circulating water system can only be divided into the equipment and the pipe and other parts in order to be cleaned. The main cleaning methods are to brush with the nylon brush and to clean with high-pressure water jet. These methods are mainly applied to the water cooling type condenser.

a、 Cleaning with the nylon brush. The covers on the two ends of the condenser are dismantled first, then the pressurized water or the compressed air are let into the heat exchange pipe and the brush moves repeatedly along the horizontal direction. The length of the brush handle must exceed 1/2 of the pipe length.

b、 Cleaning with the high-pressure water jet This method can also be applied to the cleaning of the pipes and other equipments. When the heat exchanger is cleaned, the two end heads of the heat exchanger must be taken down and the high-pressure water gun is used to clean the heat exchange tube one by one. For the cleaning of the pipe, the high-pressure water jet with the interfering gun head can be used.

（2） Chemical cleaning

The chemical cleaning is a kind of method that dissolves, loosens, brushes off or peels off the sediments in the equipments to be cleaned by means of the chemical agent. The chemical cleaning is often used together with the physical cleaning. The chemical cleaning agent, the cleaning operation time and the safety instructions related to the chemical cleaning must be provided by the professional and experienced company who supplies the chemical cleaning agent and the cleaning service. Now the operation procedure for the non-shutdown chemical cleaning is described as follows：

The operation steps are：alga sterilization cleaning→acid wash→neutralization→prefilming

a、 Alga sterilization cleaning The disinfectant that has good disinfection effect and capability to peel off the biological sludge must be used for the alga sterilization cleaning. For example, sodium hypochlorite and benzalkonium bromide are used together. Usually, it takes a long time for the alga sterilization cleaning. The water turbidity can be tested every 3 to 4 hours. When the turbidity curve tends to be smooth, the cleaning can be ended.

b、 Acid wash After the alga sterilization cleaning, the acid wash cleaning can be carried out. The appropriate inhibitor and pickling agent must be used. Normally, the non-shutdown cleaning is carried out when the PH value is low.

First, the inhibitor is put into the water system. After the inhibitor is evenly distributed in the water system, the pickling agent is added. The distribution droplet method must be used for the pickling agent to lower the PH value in the water and to keep it between 2.5~3.5.

During the acid wash process, the ion concentration in the water must be checked often. In the beginning phase of the cleaning, checking is carried out every 4h. In the middle and later phase of the cleaning, checking is carried out every 2h. When the overall curve tends to be smooth, the acid wash can come to an end. The turbidity curve can be used as an auxiliary judging method for the end.

During the acid wash, some surfactant and remover can be added to facilitate the effect of the acid wash.

Fresh water must be added to the water system after the acid wash. Meanwhile, the waste liquid must be discharged from the discharge exit in order to lower the turbidity and the concentration of the iron ion in the water system. A little NaCO3 is added to neutralize the remained acid to lay a foundation for the prefilming in the next step.

c、 Prefilming After the acid wash is completed, the prefilming agent of a certain amount is put into the system to prefilm. After the prefilming is completed, the high-concentration prefilming water is diluted and discharged by means of the makeup water. The total phosphorus value is controlled to be approx. 10mg/L and then it proceeds to the normal water treatment.

4.3.2 Cleaning of condenser fin

The condenser of the modulized air cooling, cooling-water（hot water）unit adopts the air-cooling fin heat exchanger. Because it is put outside, after operating for some time, the fin will inevitably be blocked by dust and other things and the heat exchange effect is thus affected.

In the cold production, the high pressure rises and the cold production effect is reduced and the energy consumption increases. In the heat production, the low pressure decreases and the heat production effect is reduced and the air discharge temperature rises. All these will quite probably lead to the damage of the compressor.

Therefore, under normal circumstances, after the unit has operated for10~12 months, the condenser must be cleaned. If the environmental pollution is severe, the cleaning cycle must be reduced.

Cleaning method：

1) Cut off the power of the unit；
2) Dismantle the items that can not be moistened such as the electrical appliance box, the compressor and the heat preservation cotton;
3) Use the waterproof plastic bag to pack and seal all the connection terminals（including the junction box of the compressor）to ensure that there is no ingress of water；
4) Use the pressure gas or pressure water（if the fin is stuck with the oleaginous substances, the water containing neutral detergent must be used）to repeatedly brush the fin against the wind ingress direction of the condenser. To wash, it must be vertical to the direction of the fin in order to prevent rewinding of the fin；
5) The “clean” standard is that the original color of the fin must be seen or all the water flowing down along the fin is the clean water.

4.4 Important maintenance operation

4.4.1 On-site leak detection

1) Audio leak detection

When the temperature and the pressure of the refrigerant in the refrigeration system are rather high, sometimes there is a slight fizzle in the leak point of the system. The leak point can be detected based on such audio point.

2) Leak detection by test

If oil leak or oil drop or smear are found in certain position of the refrigeration equipment of the freon system, it can be judged that there is a leak of the freon refrigerant in such positions.

3) Leak detection by suds

The is the widely used, convenient and effective method at present. First, the suds is cut into slices and dipped in the hot water. Keep stirring it to make it melt. When it is cooled and becomes the stiff yellow solution, it can be used. When the leak detection is carried out, the position to be detected is first cleaned. The clean white gauze or the brush is dipped with the suds, then daubed to the leak detection position. After the observation for several minutes, if there are white bubbles or bubbles keep spilling out at the leak detection position, then it shows that such position is the leak point.

4) Leak detection by halogen lamp

See instrument operation instructions for details

5) Leak detection by electronic halogen lamp instrument

See instrument operation instructions for details

4.4.2 Evacuation and filling of refrigerant

The refrigerant filling status is confirmed by inspecting the air admission pressure and the air exhaustion pressure. If there is any leakage, then the secondary refrigerant must be supplemented. Air tightness inspection must be carried out for both the supplementation of the secondary refrigerant and the replacement of the parts in the refrigeration cycle system. The refrigerant filling must be treated differently under the following two conditions：

1) Complete leakage of the refrigerant

In this case, the high pressure nitrogen gas（air pressure of 15~20 kg）orthe refrigerant must be used to detect the leak of the system. If repair welding is necessary, then the air in the system must be discharged before welding is carried out. Before the refrigerant is filled, the whole refrigeration system must be dry and vacuumized. The steps are as follows：

suds and hair brush

Electronic leak detection instrument

High pressure bottle

vacuum pump

(1) Ensure that all stop valves of the unit are turned on. The evacuation tube is connected at the fluorine injection nozzle on the compressor air suction pipe and on the stop valve of the air outlet pipe of the condenser.

(2) Use the vacuum pump to vacuumize the pipe of the system.

(3) After the required vacuum degree(133Pa) is reached, use the refrigerant bottle to inject the refrigerant to the refrigeration system via the fluorine injection nozzle on the stop valve of the liquid outlet pipe of the condenser. The injection and filling amount of the refrigerant needed has been indicated in the nameplate and in the technical specification table.

(4) The filling amount of the refrigerant will be affected by the ambient temperature. If the required filling amount is not reached, filling may also be carried out via the fluorine injection nozzle on the compressor air suction pipe when the unit is in the operation mode.

2) Supplementation of refrigerant

The refrigerant filling bottle is connected on the fluorine injection nozzle of the compressor air suction pipe.

(1) Make the refrigerated water/cooling water cycle, then start up the unit.

(2) Screw off the valve of the refrigerant bottle, slowly inject the refrigerant into the system and check the suction pressure and the discharge pressure.

Fluorine injection nozzle on the air suction pipe

Notes：

When the leak detection and the air tightness test are carried out, never inject any combustible and toxic gases such as oxygen and acetylene into the refrigeration system. Only high pressure nitrogen gas or refrigerant can be used.

4.4.3 Air discharge method in the system

(1) Close the liquid-outlet stop valve of the condenser, then start up the compressor to immit the refrigerant in the low-pressure section into the condenser；

(2) Loosen the plug screw of the bypass opening of the discharge stop valve, clockwise turn the handle of the discharge stop valve（turn it to about half a circle） to make the valve have three ways and the high pressure gas escapes from the bypass opening.

(3) Use the palm to block the discharged airflow. If you feel it is like wind blowing and there is no coolness, then most of the discharged airflow is the air. Continue to discharge until there is a little smear and some coldness on the hand. At this time the air is almost completely discharged. Or the pressure gauge is connected at the plug screw of the bypass opening of the discharge stop valve. If the corresponding saturation temperature of the pressure gauge is much higher than the water discharge temperature of the cooling water of the condenser, it shows that the discharge still has to continue. If it is only 2~3 degrees higher, then it shows that the air is almost completely discharged.

4.4.4 Replacement of compressor

The burnout of the compressor is a serious accident. However, if after the compressor is burned and destroyed and the compressor is directly replaced without carefully treating the system, this will lead to severe consequences and the loss of credit and reputation. Therefore, after the compressor is burned out, the strict procedure must be followed to the treat the system. In the past, people used to use R11 to clean the system. If the application goes well, this is a good proposal. It can make the system resume to a perfect status. But R11 can destroy the ozone layer and this method is very complicated, and the maintenance personnel must have abundant technical knowledge and experience, at the same time even if the perfected R11 recycling method is used, the cost of this method is very high, therefore the

following methods are recommended for the treatment:

Step 1：Check the refrigerant system and various circuits, try to find out the reasons of the burnout of the compressor. In most cases, the burnout of the compressor is not due to the defect of the compressor itself, but due to the electrical reasons or the lack of oil, etc. Therefore, finding out the real reasons of the burnout of the compressor is the important guarantee to prevent the similar accidents from happening again.

Step 2：Reclaim the refrigerant. Because the R22 refrigerant adopted at present is harmful to the environment, it must be reclaimed. Relevant equipments and tools must be prepared before the reclaiming. In particular, good ventilation must be maintained for the working environment.

Step 3：Take the compressor out from the system and at the same the dry filter, the filter and the gas liquid separator must also be replaced.

Step 4：Check and clean the refrigeration and control valves such as the expansion valve, the solenoid valve and the capillary tube.

Step 5：Use the high pressure nitrogen gas to repeatedly clean the whole system.

Step 6：Replace the compressor, add a liquid-vision mirror with humidity indication, provide a burnout-type dry filter of bigger size to replace the old one and use a pressure gauge and a multiple-way valve to prepare to test the pressure drop on the two ends of the filter.

Step 7：Vacuumize the system. It is recommended that the 3-times vacuumizing method is used to reduce the pressure of the system to the appropriate value.

Step 8： Inject the refrigerant to the system. Note that the unit must not be started up before the filling amount of the refrigerant is lower than 60% of the rated filling amount of the unit. This can be realized by raising the steel refrigerant bottle high, i.e. reverse filling, from the very beginning.

Step 9：After the unit starts up, continue to inject the refrigerant until the rated filling amount is reached. If necessary, the liquid filling may be used. But note that the liquid filling point must be in front of the gas liquid separator and the best position is the inlet of the evaporator.

Step 10：After the system normally starts up, at least 4 consecutive hour must be spent in observing the pressure drop value on the two ends of the filter. If the pressure drop value exceeds the recommended value in the attached table, then shut the unit and replace the filter. Then return to Step 3 and continue.

Step 11：After Step 10 is completed, let the system continue to operate for 48 hours, then take a little compressor oil and carefully check its smell. Use PH test paper to measure its acidity. If necessary, please replace the compressor oil.

Step 12：After Step 11 is completed, let the system continue to operate for 48 hours. If everything is normal, replace the dry filter back with the original model of the unit.

Step 13：After the above procedures are completed and after two weeks, inspect the system again to ensure that the operating condition of the unit reaches the design requirement.

4.4.5 Replacement of four-way valve

The modulized air cooling, cooling-water and hot-water unit is equipped with the device that adjust the flow direction of the refrigerant——the four-way valve. The conversion between the cold production and the heat production mainly relies on this valve which is an integral part in the heat pump system.

Replacement requirement：

(1) The replaced four-way valve must adopt the model which is the same as the original one.

(2) The pipe connection must comply with the original four-way valve.

(3) When welding is carried out, the four-way valve body must be enwrapped by wet cloth to avoid the burnout of the slide block inside the valve body and to prevent water from flowing into the pipe.

(4) Full nitrogen gas welding must be guaranteed when welding is carried out. The pressure of the nitrogen gas is 1.0~3.0kgf/cm2.

4.4.6 Replacement of thermostatic expansion valve

The thermostatic expansion valve is the restricting element commonly used in the commercial refrigeration system. Compared with the capillary tube, it has a good and large adjustment scope, the reliable superheat degree control and less work tests. Compared with the electronic expansion valve, it does not need the complicated control circuit and has good mechanical stability. Due to the above advantages, the thermostatic expansion valve is widely used in the commercial application.

However, in the system which adopts thermostatic expansion valve, some new problems often occur that disturb us all the time. In order to solve these problems, first we need to understand the operating principle of the thermostatic expansion valve：the thermostatic expansion valve is the temperature-type automatic expansion valve and is most commonly used in the liquid supply for the dry-type evaporator. It aims to adjust the liquid supply amount to match the load of the evaporator to enable the liquid amount supplied to completely evaporate at the exit of the evaporator. This not only avoids the oversupply of liquid, but also ensure that the heat transfer area of the evaporator can be fully utilized. The valve port supports the force from the Temperature sensor, the spring force and the pressure of the evaporator exit from the balance pipe. The valve port has always been in the dynamic equilibrium of these three resultant forces.

In the system that adopts the thermostatic expansion valve, the most frequently occurring problem is that the pressure of the system is too low and even the low voltage protection occurs. This is possibly caused by the following factors：

（1）The items which are filled in the Temperature sensor are moved.

（2）The moisture in the system ices up in the neck of the expansion valve.

（3）The superheat degree is too low.

（4）Too much or too little refrigerant is filled.

（5）The neck of the expansion valve is blocked.

（6）The thermostatic expansion valve itself is damaged.

We can see that this is a rather complicated problem and it is difficult to determine the reasons of the defect. So in order to handle such problems easily, we may adopt the following method to make confirmation step by step：

1.Confirmation test for the movement of filled items in the Temperature sensor

Just pour the hot water onto the power unit of the thermostatic expansion valve, which will make the filled items inside return to the inside of the Temperature sensor. This treatment may be carried out during the starting up or the shutting down process. Through this treatment, if the suction pressure does not rise, the please take the next step:

2.Confirmation test for the icing up of system moisture at the neck of the expansion valve

Use the method similar to the previous step. When the machine starts up, pour the hot water onto the body of the valve, which enables the ice to melt. At the same time, if the moisture ices up at the neck of the expansion valve, the high discharge pressure may be observed. Through the treatment, if the pressure does not rise, then take the next step. If this solves the problem, replace a try filter for the system and then vacuumize it again.

3.Confirmation test for the too low superheat degree

If the superheat degree is too low due to certain reasons, then take the Temperature sensor down from the air suction pipe when start up the machine. Through the treatment, if the suction pressure does not rise, then take the next step. If this solves the problem, please find out the reason that lead to the too low superheat degree and consider whether the position of the Temperature sensor is appropriate.

4.Too much or too little filling of refrigerant

The best way to judge whether the filling for a system is appropriate or not is via the degree of supercooling and the degree of superheating. Since there is no interface on the liquid pipe of the product for the online test purpose (note: it refers to the pressure test), so we can only use the lab test results to calculate the pressure drop of the refrigerant after it passes the condenser, or refer to the previous change curve of the supercooling degree in different environments which is concluded from the test results to judge whether the supercooling degree of the unit which has problems during the online test is appropriate or not.

5.The neck of the expansion valve is blocked

If there are foreign materials at the neck of the thermostatic expansion valve, they can be moved away via the following methods. Put the Temperature sensor into the hot water, make the system cycle reversely (note: not applicable to module machines). In this way, there is approx. 80% of the reverse flow. Then gently knock the valve body 3-6 times, then shut down the machine, well pack the Temperature sensor and restart the machine.

6.Damage of the thermostatic expansion valve itself

If the above methods have been tried and still the problem can not be solved, please press down the valve body to check whether it opens in the air. If it does not open, it is possible that there is a leakage in the filled materials of the Temperature sensor.

4.4.7 Treatment of the leak of the system pipe

For the module machine, the most important thing for the project installation and maintenance is to ensure the high tightness of the pipe of the system. This is also the most difficult thing in the project installation and maintenance. The leak of the refrigerant not only affects the normal operation of the unit, but also pollutes the environment. The refrigerant will decompose and produce toxic gases once it encounters the naked fire and is very harmful to living beings.

Once the system pipe is found to have leakage, the unit must stop operation immediately and the leak detection and the leak repair must be carried out.

Operation step：

(1) The nitrogen gas 20.0kgf/cm2 is filled in the system pipe.

(2) The suds is used to check the connection point of the main pipe. Marks will be made once leaks are

detected.

(3) After the leak detection for the whole pipe is completed, the nitrogen gas 1.0~3.0kgf/cm2 is filled and welding and leak repair are carried out.

(4) After the leak repair is completed, the nitrogen gas（25.0kgf/cm2） is filled. After 48 hours, the readings of the pressure gauge is checked again. The pressure drop（5） which is calculated based on the following formula must not exceed 1% of the test pressure. Otherwise, causes must be found out, leak must be eliminated and re-inspection must be carried out until it is qualified.

△P=P1-P2（273+T1）/（273+T2）

In the formula：△P——pressure drop（MPa）；

P1, P2——nitrogen gas pressure when the test begins and completes（MPa）；

T1, T2——nitrogen gas temperature when the test begins and completes（℃）.

If possible, it is better that once the refrigerant is found to have leak in the beginning, the halogen leak detection instrument is used to carry out the leak detection.

4.4.8 Vacuumizing the system pipe after the maintenance

The vacuum degree of the system pipe directly affects the normal operation of the unit. Insufficient vacuum degree will make the high pressure of the system rise abnormally and increases the power consumption of the unit or even damages the compressor. Therefore, after the pressure maintaining leak detection by means of nitrogen gas, the system must be strictly vacuumized.

Operation steps：

(1) Discharge the high-pressure nitrogen gas which is used as the pressure maintaining leak detection.

(2) As shown in the following drawing, the pressure gauge is connected to the fluorine injection nozzle of both the high pressure valve and the low pressure valve of the system（for this intelligent module unit, the high pressure side and the low pressure side must be vacuumized at the same time）. At least one of the two dial plates must be a low pressure dial plate. The vacuum degree must be based on the readings of the low pressure dial plate.

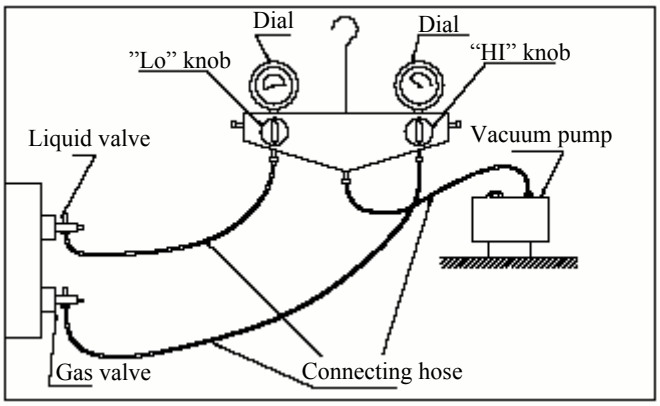

(1) Start up the vacuum pump, open the turnbuttons “LO” and “HI”；

(2) When the vacuum degree reaches-1.0kgf/cm2, continue the vacuumizing for 0.5~1.0 hour, then close the turnbottons “LO” and “HI” and stop the vacuum pump.

(3) Connect the tube which is connected to the vacuum pump to the freon（the refrigerant indicated on the nameplate of the unit must be used ）filling bottle, discharge the air in the tube, turn on the button “LO” and fill the tube in the system with freon. When the pressure reaches 0.0kgf/cm2, close the button “LO”.

(4) Connect the tube which is connected to the freon filling bottle to the vacuum pump, start up the vacuum pump, open the button “HI” and vacuumize it for 30 minutes, turn on again the button “LO” until the vacuum degree reaches-1.0kgf/cm2；

Now the vacuumizing process is completed.