Chapter 2 Electric and Control Section

2.1 Strong power section

2.1.1 Circuit diagram

LSQW（R）F40M/B

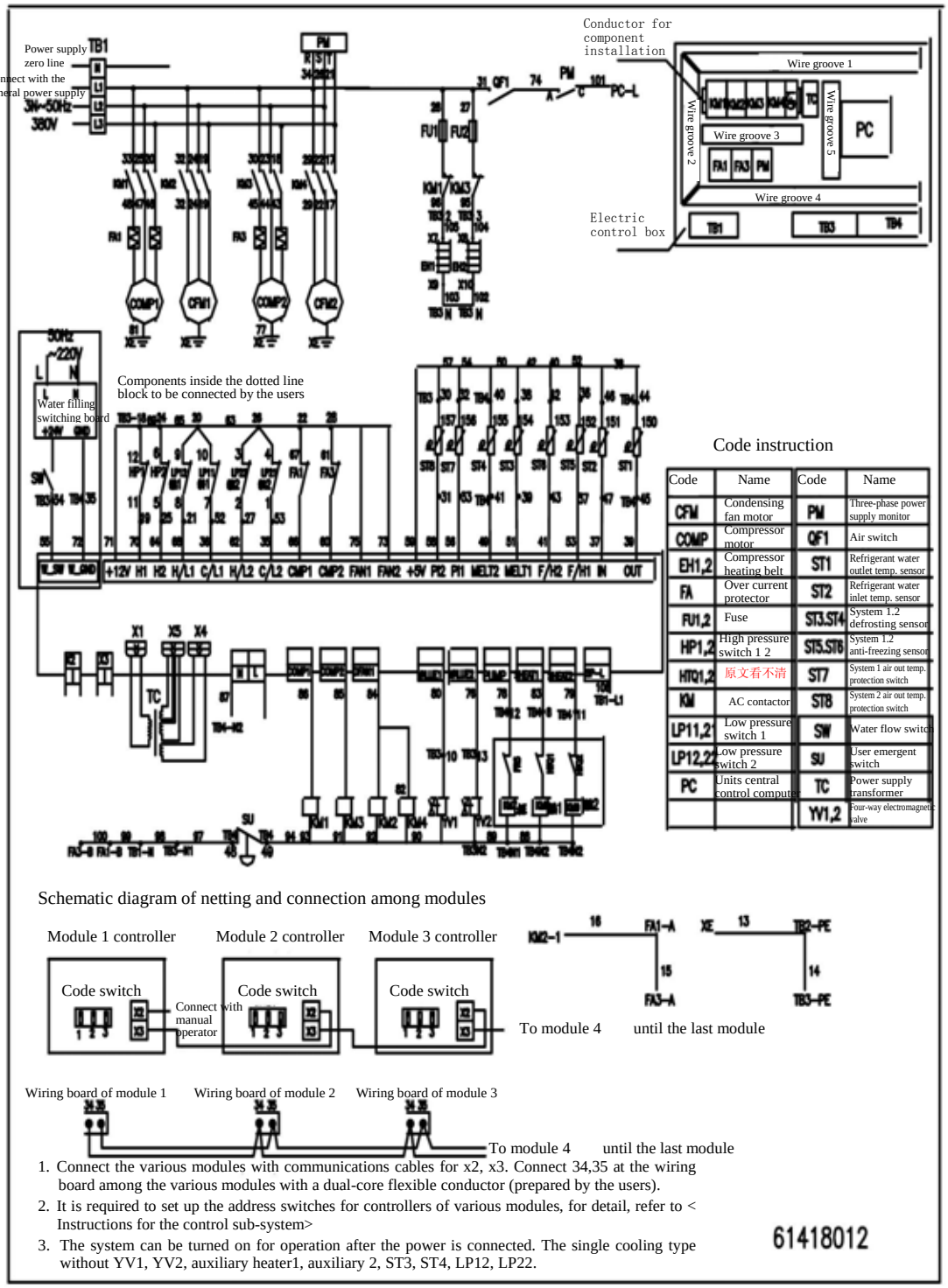

Code	Name	Code	Name
CFM	Condensing fan motor	PM	Three-phase power supply monitor
COMP	Compressor motor	QF1	Air switch
EH1,2	Compressor heating belt	ST1	Refrigerant water outlet temp. sensor
FA	Over current protector	ST2	Refrigerant water inlet temp. sensor
FU1,2	Fuse	ST3.ST4	System 1.2 defrosting sensor
HP1,2	High pressure switch 1 2	ST5.ST6	System 1.2 anti-freezing sensor
HTQ1,2	原文看不清	ST7	System 1 air out temp. protection switch
KM	AC contactor	ST8	System 2 air out temp. protection switch
LP11,2	Low pressure switch 1	SW	Water flow switch
LP12,22	Low pressure switch 2	SU	User emergent switch
PC	Units central control computer	TC	Power supply transformer
		YV1,2	Four-way electromagnetic valve

LSQW(R) F60M/B

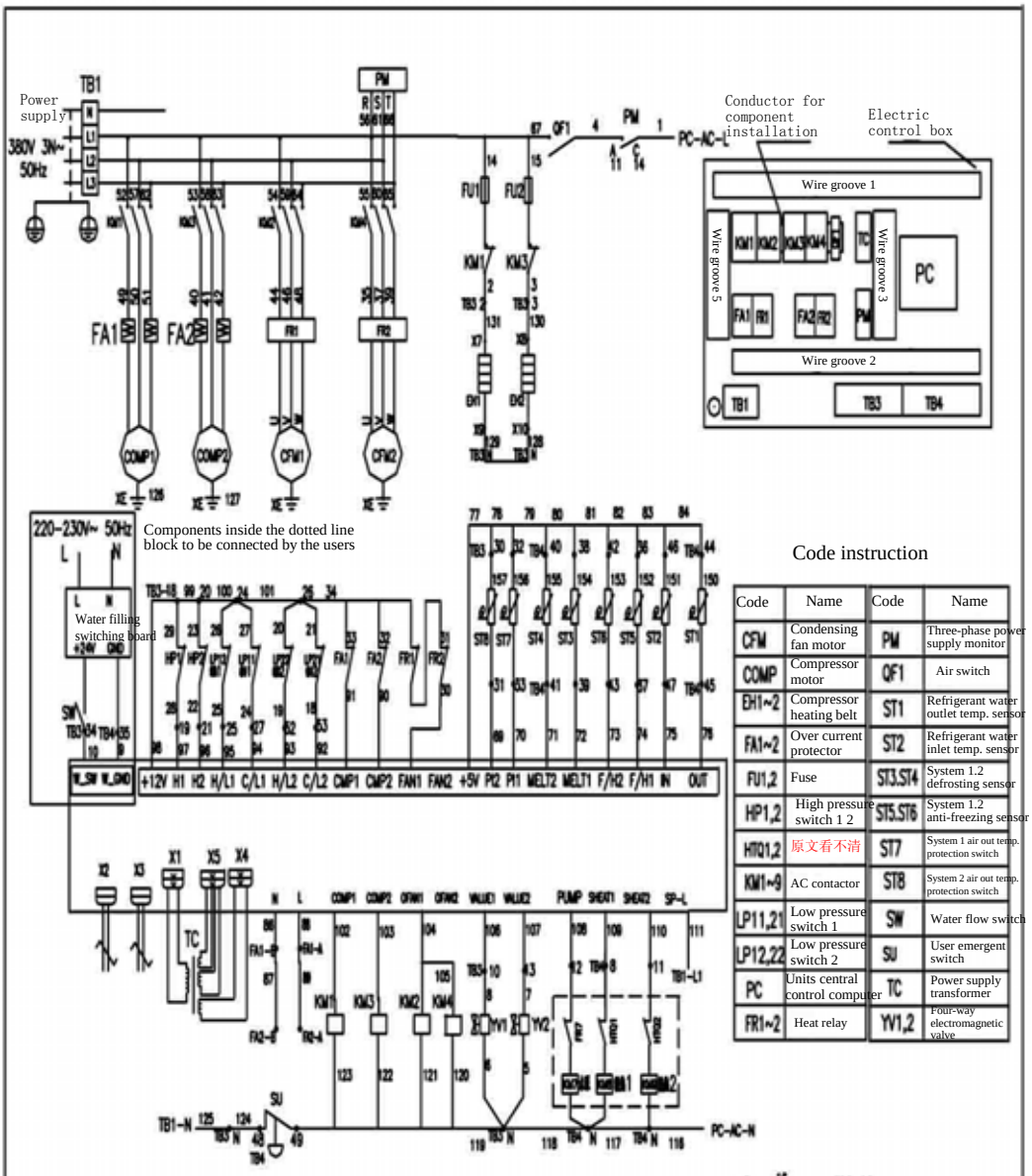

Code instruction

Code	Name	Code	Name
CFM	Condensing fan motor	PM	Three-phase power supply monitor
COMP	Compressor motor	QF1	Air switch
EH1~2	Compressor heating belt	ST1	Refrigerant water outlet temp. sensor
FA1~2	Over current protector	ST2	Refrigerant water inlet temp. sensor
FU1,2	Fuse	ST3,ST4	System 1.2 defrosting sensor
HP1,2	High pressure switch 1 2	ST5,ST6	System 1.2 anti-freezing sensor
HT01,2	原文看不清	ST7	System 1 air out temp. protection switch
KM1~9	AC contactor	ST8	System 2 air out temp. protection switch
LP11,21	Low pressure switch 1	SW	Water flow switch
LP12,22	Low pressure switch 2	SU	User emergent switch
PC	Units central control computer	TC	Power supply transformer
FR1~2	Heat relay	YV1,2	Four-way electromagnetic valve

Schematic diagram of netting and connection among modules

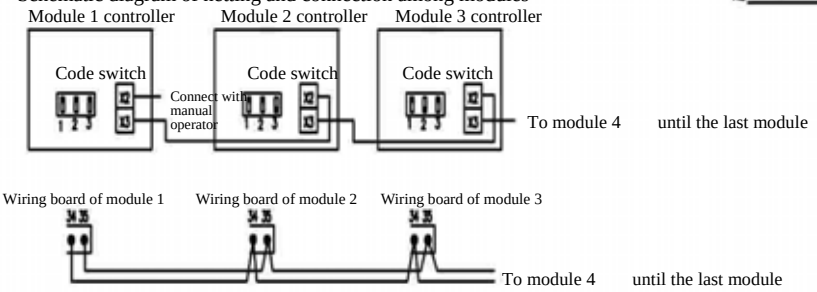

1. Connect the various modules with communications cables for x2, x3. Connect 34, 35 at the wiring board among the various modules with a dual-core flexible conductor (prepared by the users).
2. It is required to set up the address switches for controllers of various modules, for detail, refer to < Instructions for the control sub-system>
3. The system can be turned on for operation after the power is connected. The single cooling type without YV1, YV2, auxiliary heater1, auxiliary 2, ST3, ST4, LP12, LP22.

61418011

LSQW(R) F80M/B

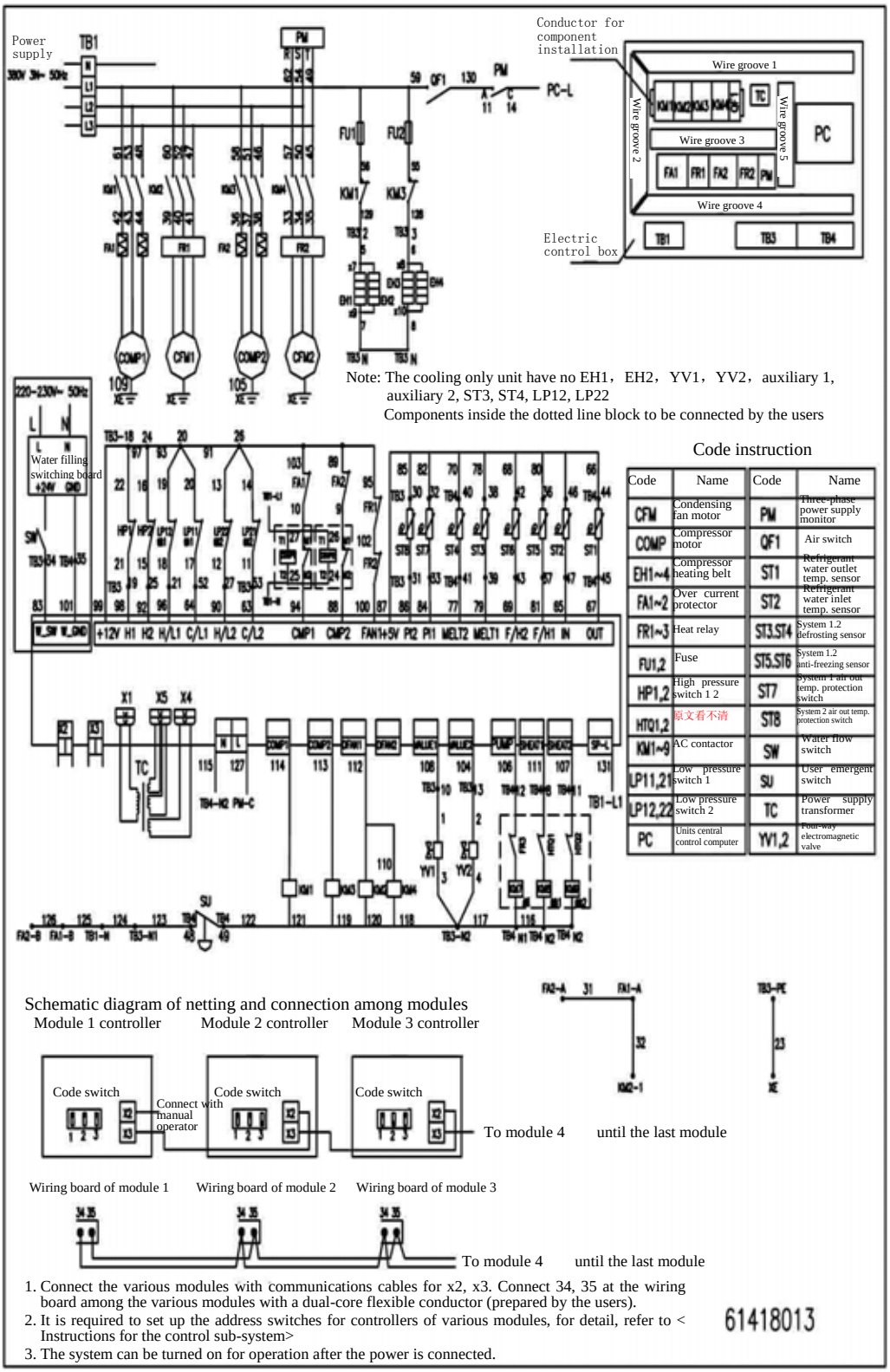

Note: The cooling only unit have no EH1，EH2，YV1，YV2，auxiliary 1, auxiliary 2, ST3, ST4, LP12, LP22
Components inside the dotted line block to be connected by the users

Code instruction

Code	Name	Code	Name
CFM	Condensing fan motor	PM	Three-phase power supply monitor
COMP	Compressor motor	QF1	Air switch
EH1~4	Compressor heating belt	ST1	Refrigerant water outlet temp. sensor
FA1~2	Over current protector	ST2	Refrigerant water inlet temp. sensor
FR1~3	Heat relay	ST3,ST4	System 1.2 defrosting sensor
FU1,2	Fuse	ST5,ST6	System 1.2 anti-freezing sensor
HP1,2	High pressure switch 1 2	ST7	System 1 air out temp. protection switch
HT01,2	原文看不清	ST8	System 2 air out temp. protection switch
KM1~9	AC contactor	SW	Water flow switch
LP11,21	Low pressure switch 1	SU	User emergent switch
LP12,22	Low pressure switch 2	TC	Power supply transformer
PC	Units central control computer	YV1,2	Four-way electromagnetic valve

1. Connect the various modules with communications cables for x2, x3. Connect 34, 35 at the wiring board among the various modules with a dual-core flexible conductor (prepared by the users).
2. It is required to set up the address switches for controllers of various modules, for detail, refer to < Instructions for the control sub-system>
3. The system can be turned on for operation after the power is connected.

61418013

LSQW（R）F130M/B

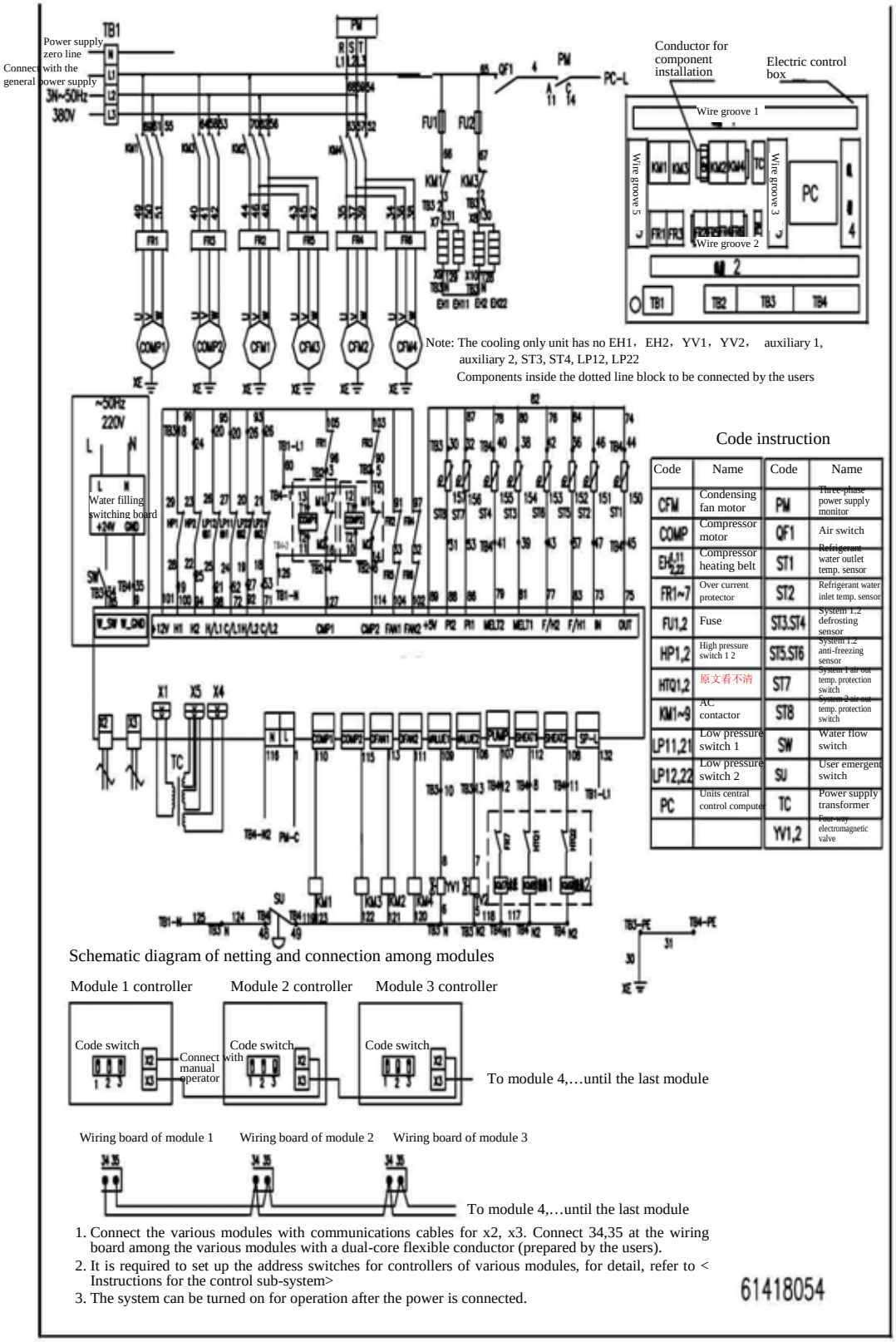

Note: The cooling only unit has no EH1，EH2，YV1，YV2， auxiliary 1, auxiliary 2, ST3, ST4, LP12, LP22

Components inside the dotted line block to be connected by the users

Code instruction

Code	Name	Code	Name
CFM	Condensing fan motor	PM	Three-phase power supply monitor
COMP	Compressor motor	QF1	Air switch
EH1,2,11,22	Compressor heating belt	ST1	Refrigerant water outlet temp. sensor
FR1~7	Over current protector	ST2	Refrigerant water inlet temp. sensor
FU1,2	Fuse	ST3,ST4	System 1,2 defrosting sensor
HP1,2	High pressure switch 1 2	ST5,ST6	System 1,2 anti-freezing sensor
HTQ1,2	原文看不清	ST7	System 1 air out temp. protection switch
KM1~9	AC contactor	ST8	System 2 air out temp. protection switch
LP11,21	Low pressure switch 1	SW	Water flow switch
LP12,22	Low pressure switch 2	SU	User emergent switch
PC	Units central control computer	TC	Power supply transformer
		YV1,2	Four-way electromagnetic valve

Schematic diagram of netting and connection among modules

1. Connect the various modules with communications cables for x2, x3. Connect 34,35 at the wiring board among the various modules with a dual-core flexible conductor (prepared by the users).
2. It is required to set up the address switches for controllers of various modules, for detail, refer to < Instructions for the control sub-system>
3. The system can be turned on for operation after the power is connected.

2.1.2 List of connection lines

Type / Specifications	LSQWRF40M/B LSQWF40M/B	LSQWRF60M/B LSQWF60M/B	LSQWRF80M/B LSQWF80M/B	LSQWRF130M/B LSQWF130M/B
Power line mm^2	10	25	35	50
Air breaker A	63	100	125	180

Remarks: The recommended diameter of the power line is on condition that the power set is 15m from the system and the diameter should be increased properly if the distance is more than 15m.

2.2 Weak power section

2.2.1 Running mode

The system is provided with two kinds of running modes, i.e. cooling, heating and defrosting.

Press the mode button, the system will change over periodically according to cooling ——> heating——>cooling.

For the heating mode, the defrosting mode is selected when the defrosting condition is ready.

2.2.2 Description of hand controller and the operation instruction

2.2.2.1 Brief description

The control sub-system of the unit module air cooling, cooling (heating) water chiller is connected together into a net for a master module controller and as many as 7 sub-module controllers, with the system controlled centrally under the master module controller, realizing intelligent control and management. It features as follows:

1. The hardware resource is of a high reliability, ensuring the normal operation of control system for a long time reliably.
2. It adopts a module configuration mode, adaptable to various forms for different users.
3. The intelligent control software is available to realize the optimal energy saving operation of the system.
4. The complete and rapid failure self-diagnose function is the pledge for the safe operation of the system.
5. The simple and practical full Chinese operation interface facilitates user’s regular operation and maintenance.
6. It is equipped with a powerful function, available to control the water pump and the auxiliary electric heating. It has an automatic function to counter water freezing in winter.
7. The display board is available for far end control.

2.2.2.2 Description of panel and push buttons

1. Power indicator (green), the indicator is lit when the display board is powered on, otherwise, it is distinguished.
2. Running indicator（green）, the indicator is lit when the system is powered on, otherwise, it is distinguished.
3. Failure indicator（red）, the indicator is lit when there is failure in the system, otherwise, it is distinguished.

4. ON/OFF button, it is to control the ON/OFF change over of the system. The system will be turned on when it is pressed down (for 3s) at the OFF status, and the system will be turned off when it is pressed down (for 3s) at the ON status.
5. Reset button, the display screen will be of a full screen display when it is pressed down (for 3s), with the failure eliminated, the system will be ready to detect the failure again.
6. Up button, in the menu selection, press the button to move the cursor upward or leftward one item. In the data revision, press the button to increase the value.
7. Down button, in the data revision, press the button to decrease the value.
8. Exit button, press the button to return back to the previous level menu.
9. Confirm button, in the menu selection, press the button to confirm the selected item and enter the next or the previous level menu. In the data revision, press the button to confirm the parameter value and to shift the cursor.
10. LCD display，information indication area.

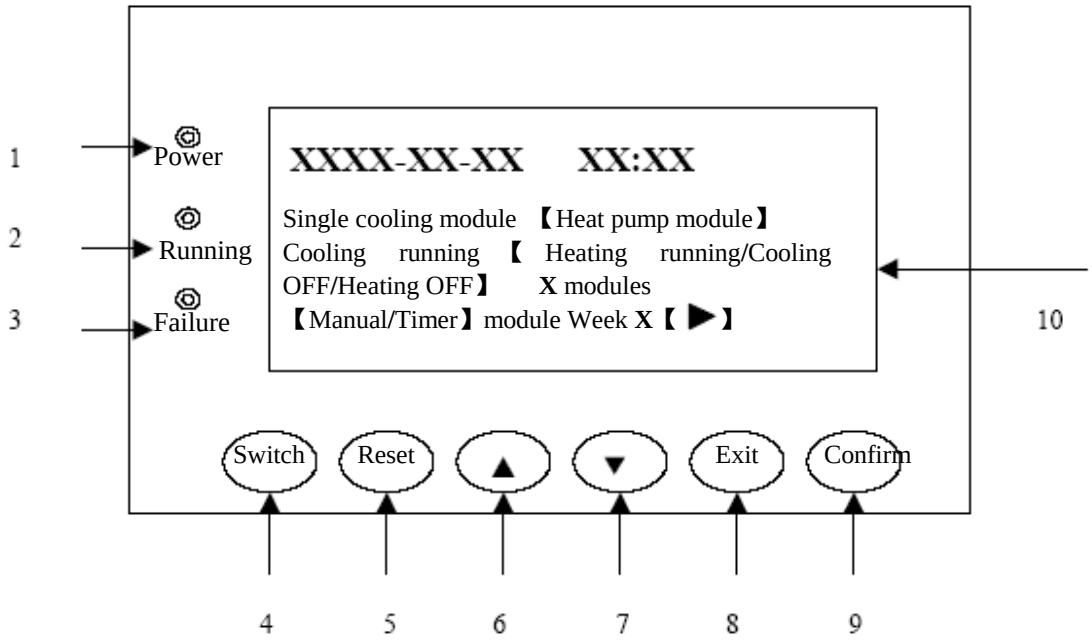

2.2.2.3 System On / Off

The on/off of the system at non-adjustment status may be with a manual mode, or with a timer mode, with the manual mode having a priority to the timer mode. At the adjustment mode, both manual and timer modes are invalid.

A. Manual mode

1） The manual ON: when the system is at OFF mode, press ON/OFF button for 3s to start the system. In this case, the system running indicator will be lit after a delay time for the compressor to start, and the procedure of manual ON is completed.

2） The manual OFF: when the unit is at ON mode，press ON/OFF button for 3s to turn off the system. In this case, the running indicator is distinguished. After the system is turned off, the compressor stop running at once, but the water pump will be turned off after 5min delay. The procedure of manual turn off is then completed.

B. Timer mode

After the system is power on or reset, carry out the system turning ON/OFF with manual mode. The detail for change over of manual and timer mode is given in Section 2.3.3.1.3, the setting of ON/OFF mode. For the timer mode, both the manual and the timer modes are valid. The system will be ON/OFF automatically when the setting time is up.

2.2.2.4 Default master menu

After the controller is powered on, the microcomputer will carry out the default for 3s. The display board LCD will indicate as follows:

```
XXXX-XX-XX     XX:XX
Single cooling module 【Heat pump module】
Cooling running 【 Heating running/Cooling
OFF/Heating OFF】     X modules
【Manual/Timer】module   Week X【▶ 】
```

The contents of default master menu vary as the system status. XX represents year, month, day, hour and minute. The contents in "【】"only indicates one of them or does not indicate at all, representing respectively the ON/OFF mode of the system, start on mode, and the number of modules connected in the net. The last ▶ means there is failure in the system, if displayed.

It will return back automatically to the above default master menu (i.e. home page) if there is no any operation on the display board within 10 minutes after entering the master menu item.

At any time when pressing the exit button on the display board for enough times, it will return back to the default master menu as given in the picture above.

2.2.2.5 Master module controller menu

When the home page is displayed on the screen (as above diagram), press confirm button to enter into the master control menu, and the screen will display as follows:

```
User setting
Module check
Parameter setting
Version information
```

Select the required function through Up/Down button, press confirm button to enter. For the menu below, the contents in "【】"only indicates one of them or does not indicate them at all. The white words with black background represent the line therein or the number therein is selected.

A User setting

These are some of the basic settings for the user. When the screen displays the master control menu, select user setting, and press confirm button to enter. The screen displays the picture as follows:

```
Timer setting
Timer setting
ON/OFF mode        【Manual/timer】
Running mode       【Cooling/Heating】
```

Page 1

Sound ON	【 √ 】
Backlight normally ON	【 √ 】
Auxiliary heating ON	【 √ 】
Automatic anti-freezing	【 √ 】

Page 1

Select the required function through Up/Down button, and press confirm button to enter or to confirm the selection. The one with a "√" behind means that the selection is valid. The one without a "√" behind means that the selection is invalid.

（**1**）**Timer setting**

Select timer setting， and press confirm to enter. The screen displays the picture as follows:

Timer setting
XXXX year **XX** month **XX** date
XX hr **XX** min
Week **X**

Press confirm button to change the selective object. Change the value of the selected object through Up/Down button, press exit button to exit from the picture, to return back to the previous level menu and to store the setting value.

（**2**）**Timer setting**

Select timer setting， and press confirm to enter. The screen displays the picture as follows:

Timer setting	
Week **X**	
Timer ON: **XX** hr **XX** min	【No/ √ 】
Timer Off: **XX** hr **XX** min	【No/ √ 】

Press confirm button to change the selective object. Change the value or status of the selected object through Up/Down button. "No" means that the preset time of the item is invalid and the item with "√" means that the preset time is valid. Press exit button to exit from the picture, to return back to the previous level menu and to store the setting value.

（**3**）**ON/OFF mode setting:** to select ON/OFF mode， press confirm button, changing over between the manual and the timer modes.

（**4**）**Running mode setting**：to select running button，press confirm button，changing over between the cooling and heating modes. Only the heating pump module has such a function and it can only be preset at the OFF status.

（**5**）**Sound ON setting**：too select sound ON button， press confirm button ， with the following "√" appeared or disappeared, indicating the function selection.

（6）**Backlight normally ON setting**： to select Backlight normally ON，press confirm button ，with the following “√” appeared or disappeared, indicating the function selection.

（7）**Auxiliary heating ON**：to select auxiliary heating ON, press confirm button ，with the following “√” appeared or disappeared, indicating the function selection. Only the heating mode has such a function.

（8）Automatic **anti-freezing**： to select automatic anti-freezing, press confirm button ， with the following “√” appeared or disappeared, indicating the function selection. Only the heating mode has such a function.

.

B Module check

At the screen display master control menu, select module check， and press confirm to enter. The screen displays the picture as follows:

Master module ▶	**Yes【No】**
Slave module 1 ▶	**Yes【No】**
Slave module 2 ▶	**Yes【No】**
Slave module 3 ▶	**Yes【No】**

Page 1（without far end interface）

Module 1 ▶	**Yes【No】**
Module 2 ▶	**Yes【No】**
Module 3 ▶	**Yes【No】**
Module 4 ▶	**Yes【No】**

Page 1（with far end interface）

Slave module 4 ▶	**Yes【No】**
Slave module 5 ▶	**Yes【No】**
Slave module 6 ▶	**Yes【No】**
Slave module 7 ▶	**Yes【No】**

Page 2（without far end interface）

Module 5 ▶	**Yes【No】**
Module 6 ▶	**Yes【No】**
Module 7 ▶	**Yes【No】**
Module 8 ▶	**Yes【No】**

Page 2（with far end interface）

Press exit button to exit from the picture, and to return back to the previous level menu. Select the required function through Up/Down button, and press confirm button to enter. With “X” being the master， and “1～7” without far end interface or one of the number in “1～8”（with far end interface）meaning that module entered. “ ” module after the status check means the module is at defrosting or automatic anti-freezing running “ ” after failure check means that the module is with failure. “ ”after test function means that the module is at forced running.

2.3.3.2.1 Temperature check

It is used to check the temperature of various checking points. Select temperature check， and press confirm to enter. The screen displays the picture in Page 1 as follows:

Water outlet temp	**XX.X**℃	▲
Water inlet temp	**XX.X**℃	
Anti-freezing temp 1	**XX.X**℃	
Anti-freezing temp 2	**XX.X**℃	▼

Page 1

Defrosting temp 1 **XX.X**℃	▲
Defrosting temp 2 **XX.X**℃	
	▼

Page 2

Change over the above two pages through Up/Down button. Press exit button to exit from the menu picture, and to return back to the previous level menu. The mono-cooling module does not indicate page 2.

2.3.3.2.2 Status check

It is used to check the status of the switch. Select status check， and press confirm to enter. The screen displays the picture of page 1 as follows:

Compressor 1	【On/Off】	▲
Compressor 2	【On/Off】	
Fan motor 1	【On/Off】	
Fan motor 2	【On/Off /No】	▼

Page 1

Four-way valve 1	【On/Off】	▲
Four-way valve 2	【On/Off】	
System status	【cooling/heating/defrosting/anti-freezing/OFF】	
		▼

Page 2

Change over the above two pages through Up/Down button. Press exit button to exit from the menu picture, and to return back to the previous level menu.

2.3.3.2.3 Failure inquiry

It is used to check the failure status of the system. Select status check， and press confirm to enter. The screen displays the picture of page 1 as follows:

The previous failure	**X**
XXXXXX	
The present failure	**XX**
XXXXXX	

With “X” being the master, one of the number in “1～7” （without far end interface or “1～8”（with far end interface） meaning that module entered. “**XX**” being two numbers, it is used to indicate the communications status of the master board and the display board. “**XXXXXX**” being the possible failure type. In case there are multiple failures existing at the same time, it will appear alternatively between the previous and the present failures. The possible failures may exist as follows:

Compressor high pressure 1	/*compressor 1 high pressure protection */
Compressor high pressure 2	/*compressor 2 high pressure protection */
Compressor high pressure 1	/*compressor 1 high pressure protection */
Compressor high pressure 2	/*compressor 2 high pressure protection */
Compressor 1 over load	/*compressor 1 over load protection */
Compressor 2 over load	/*compressor 2 over load protection */
Water switch	/*water switch protection */
Fan1 over current	/*fan 1 over current protection */
Water inlet temperature sensor	/*water inlet temperature sensor protection */
Water outlet temperature sensor	/*water outlet temperature sensor protection */
Defrost temperature sensor 1	/*defrost temperature sensor 1 protection */
Defrost temperature sensor 2	/*defrost temperature sensor 2 protection */
Anti-freezing temperature sensor 1	/*System evaporator anti-freezing protection 1*/
Anti-freezing temperature sensor 2	/* System evaporator anti-freezing protection 2*/
Air discharge high temperature 1	/*compressor 1 air discharge high temperature protection */
Air discharge high temperature 2	/*compressor 2 air discharge high Temperature protection */
Communications line failure	
Timer chip failure	
Memory chip failure	

Press exit button to exit from the menu picture, and to return back to the previous level menu.

2.3.3.2.4 Adjustment function

It is available to force ON/OFF for the compressor, fan and 4-way valve separately for any set of unit module. It is forbidden for the user to use this function. If it is required to carry out the function, it is necessary to implement under the instruction of the testing personnel to avoid accident. The function is required to enter with password and the operation method will not be given herein.

2.3.3.3 Parameter setting

It is forbidden for the user to use this function. If it is required to carry out the function, it is necessary to implement under the instruction of the testing personnel to avoid accident. The function is required to enter with password. The main points for operation: In case the menu is selected and confirmed, the screen will ask for entering password. After entering the correct password through Up/Down button and confirmed, entering formally the menu of parameter setting. With the help of Up/Down button select the parameter to be modified, and then press confirm button to enter the modify interface. Press Up/Down button to enter the parameter and then, press confirm button or exit button to return back to the parameter setting menu. With the same method, modify the other parameters. After the completion of modification, press Up/Down button to select parameter setting menu to store and exit item. The screen asks again for store the modified value or not. If it is required to store it, select “Confirm” and then, press confirm button. Store and return back to the master control menu. It should be noted that only the above exit method can be used to store the modified value. The other methods of exit can not store the modified value.

2.3.3.4 Version information

It is used to check the version number and the updating time of the software and hardware for the display board. To display the master control menu on the screen, select version information, and press confirm to enter. The screen displays the picture as follows:

Gree Electric Appliances, Inc. Of Zhuhai
[Far end master system already connected**]**
Version: **X.XX**
Date: **XXXX.XX**

Press exit button to exit from the menu picture, and to return back to the previous level menu. It will be also connected with the far end computer if there is a far end interface, and the contents in [ ] will be displayed, otherwise, there will be no indication.

2.4 Connection distribution

Connection of the power line: it is required that the phase sequence should be the same for the power line connection.

Connection of network control line: plug in turn the communications lines for 4-core network control having plugs at both ends (the affiliated parts) into the plugs X2, X3 for the master and sub-controllers. As a result, the controllers of the modules can be communicated each other and the information of each control can be operated and displayed with the help of the display board of the master module, facilitating the centralized management.

Connection of water switch：connect the lead for water switch（provided by the user）to the terminals 34, 35 of the master module and use a 2-core signal line（the affiliated parts）to connect the terminals 34, 35 of all the modules in turn, so that all the modules are interlocked with the water switch.

Connection of control line for water pump：connect the control lines of the water pump AC contactor to the terminals N, 12 of the master module.

Connection of control line for auxiliary electric heater：connect the control lines of the AC contactor for auxiliary electric heater 1 and auxiliary electric heater 2 respectively to N, 8 and N, 11 terminals of the master module respectively.

The connection is referred to the attached diagram below:

The schematic diagram for networking and connection of the master module and sub-modules is given in the attached figure 4.

The connection diagram of components in the power control cabinet is given in the attached figure 5.

The schematic diagram of layout for components in the power control cabinet is given in the attached figure 6.

Attached Fig.4 The schematic diagram for networking and connection of the master module and sub-modules

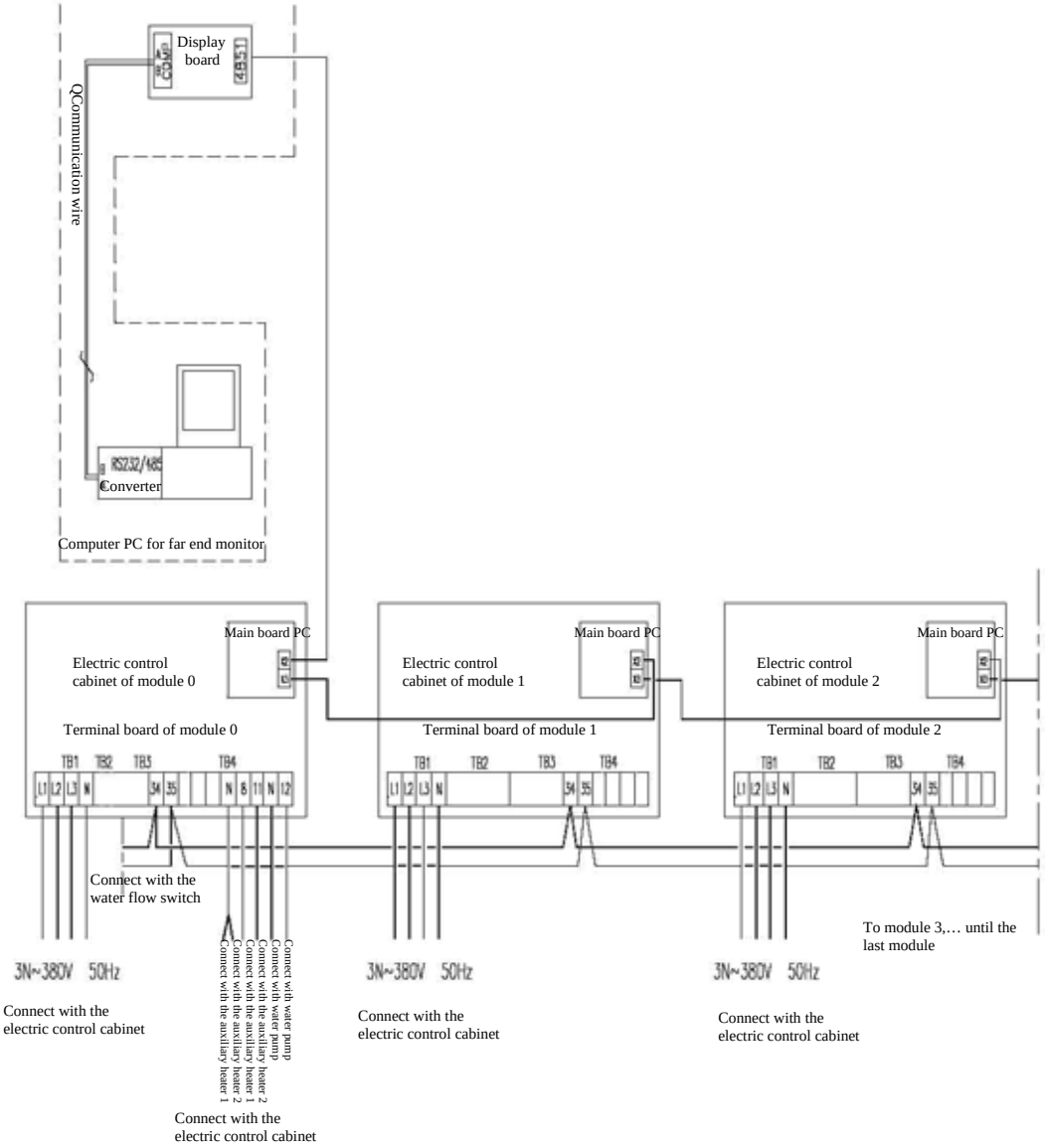

Remarks:

1. Use 4-core control connection line to connect x2, x3 of various modules. Use one 2-core signal control line (2x1mm²) to connect the terminal board TB3-34, 35 for various modules with the connection method as shown in the diagram above.
2. Use one 2-core flexible conductor (2x1mm²) to connect the leads from water flow switch to the terminal board TB3-34, 35 of module 0 with the connection method as shown in the diagram above.
3. Use one 4-core rubber sleeve flexible cable (4x10--35mm²) to connect the leads of power lines to L1, L2 L3,N of the terminal board TB1 of various modules with the connection method as shown in the diagram above.
4. Use one 2-core flexible conductor (2x1mm²) to connect the relay switch leads of pump to the terminal board TB4-12, N for module 0 with the connection method as shown in the diagram above.
5. Use two 2-core flexible conductor (2x1mm²) to connect the relay switch leads of auxiliary electric heater to the terminal board TB4-(N.8), (N.11) for module 0 with the connection method as shown in the diagram above.
6. The water flow switching board (PCO) is placed inside the electric box of module 0 (at the side of the main board PC). The detail connection is given in the circuit diagram. The module 0 is indicated on the display as the main module.
7. Far end monitor sub-system: The module system is provided with a far end monitor sub-system (remarks should be given in the order sheet if the user required ordering them). The user may carry out the running control for the system through computer and may monitor the running status parameters of the system, the failure alarm information and may modify the setting parameters for the system.

Remarks:

Inside the dotted line block is the far end monitor equipment. Among them, the computer PC should be prepared by the users themselves. RS232/485 converter, communications line (pair twisted signal line, with a length of not exceeding 1000m), display board (different from those commonly equipped for module 0) are optional. As many as 5 groups of 40 modules can be connected for the control.

Attached Fig.5 The connection diagram of components in the power control cabinet

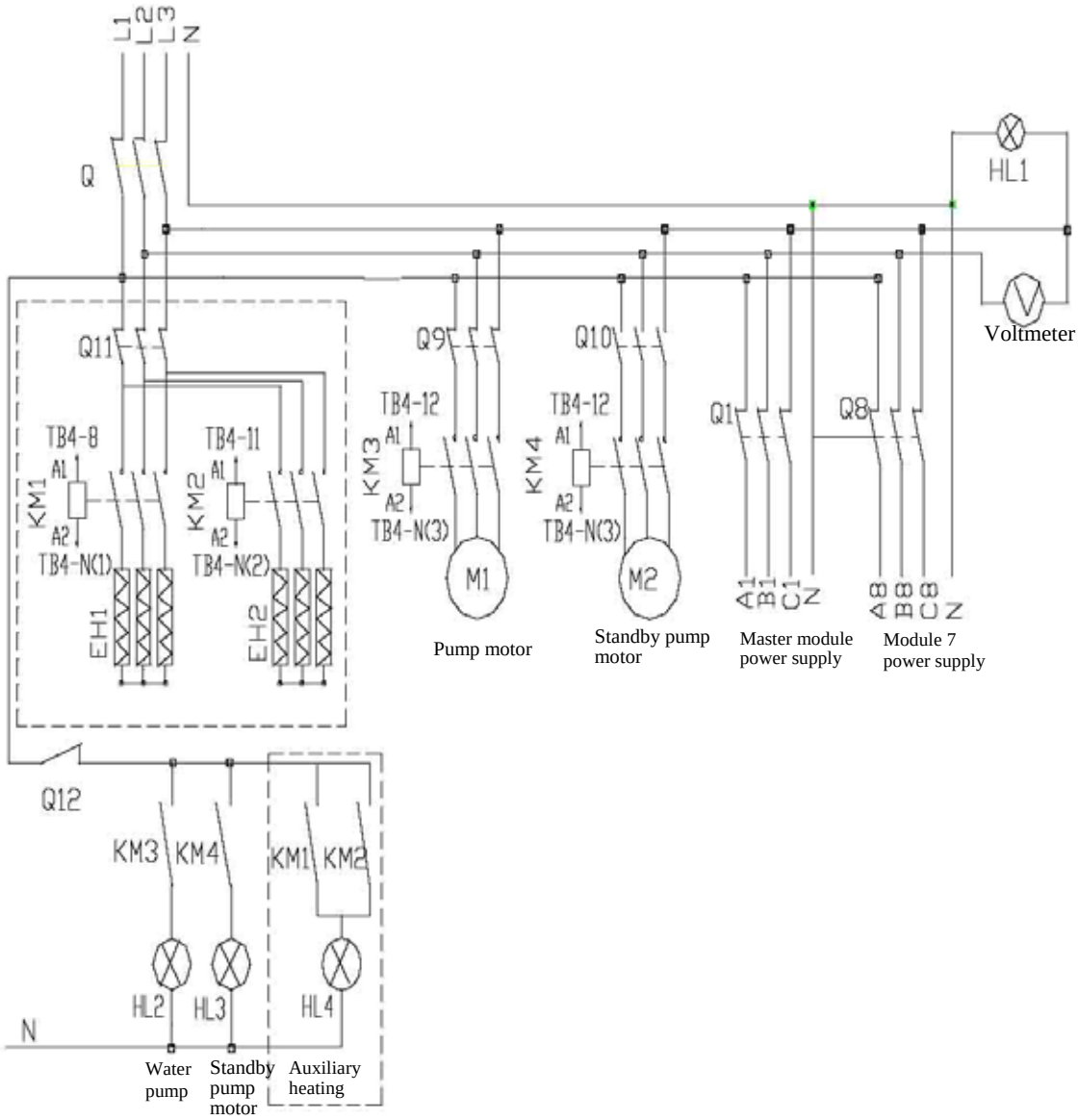

Code instruction

Q-Q11	Three-phase air switch	KMI-KM4	AC contactor
Q10	Single-phase air switch	HL1-4	Indicator light

Technical instruction

1. The unit is a heat pump type auxiliary electric heater, and the wiring operation should accord with this diagram.
2. The unit is a cooling only type or heat pump type but without the auxiliary electric heater, please eliminate the components and the connected lead wires in the broken line.

Attached Fig.6 The schematic diagram of components in the power control cabinet

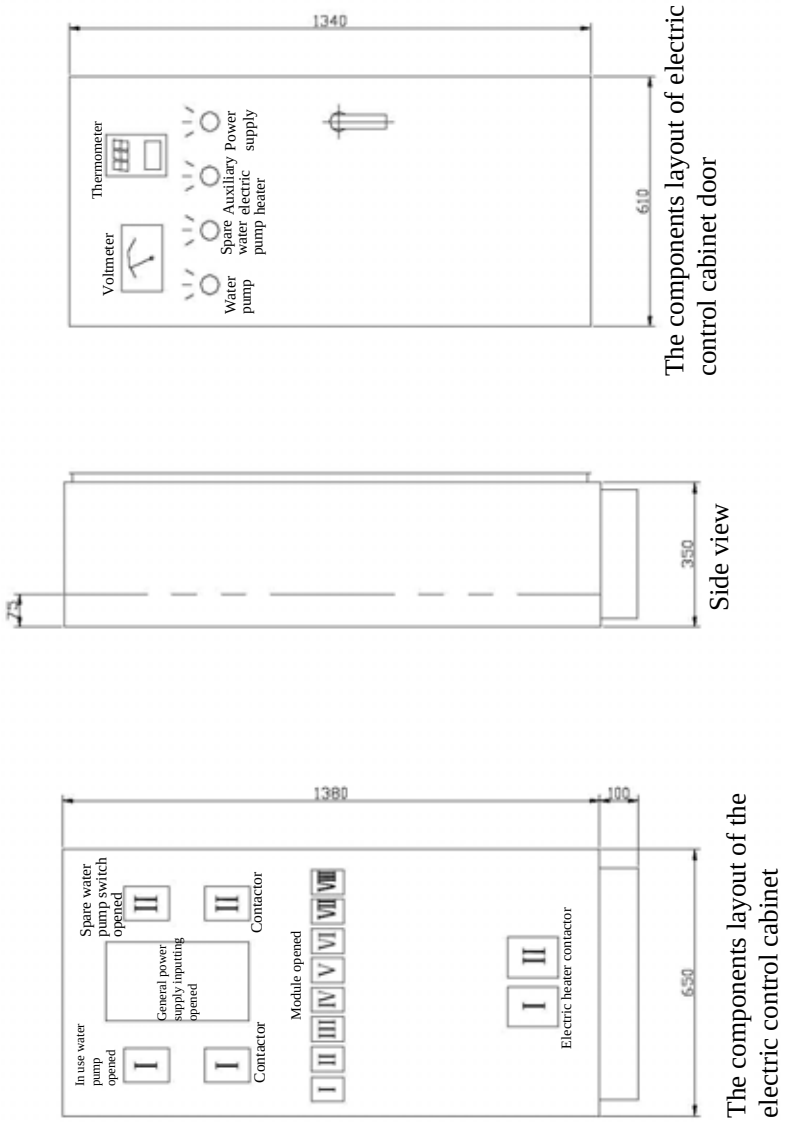

2.5 Button setting

Please read carefully 《Operation Instructions for Application Installation》. First of all, the user should confirm a correct connection of the system and see if the terminal connections are correct and not loose. See if the air breaker of power control is at OFF status. Then, go on with the following steps:

a. Setting of the address switch for controller of each module
The address switch for heat pump module set is set up as the diagram given below（Nos.1, 2 and 3 switches being the setting switches for master and sub-modules, No.4 switch being invalid）.

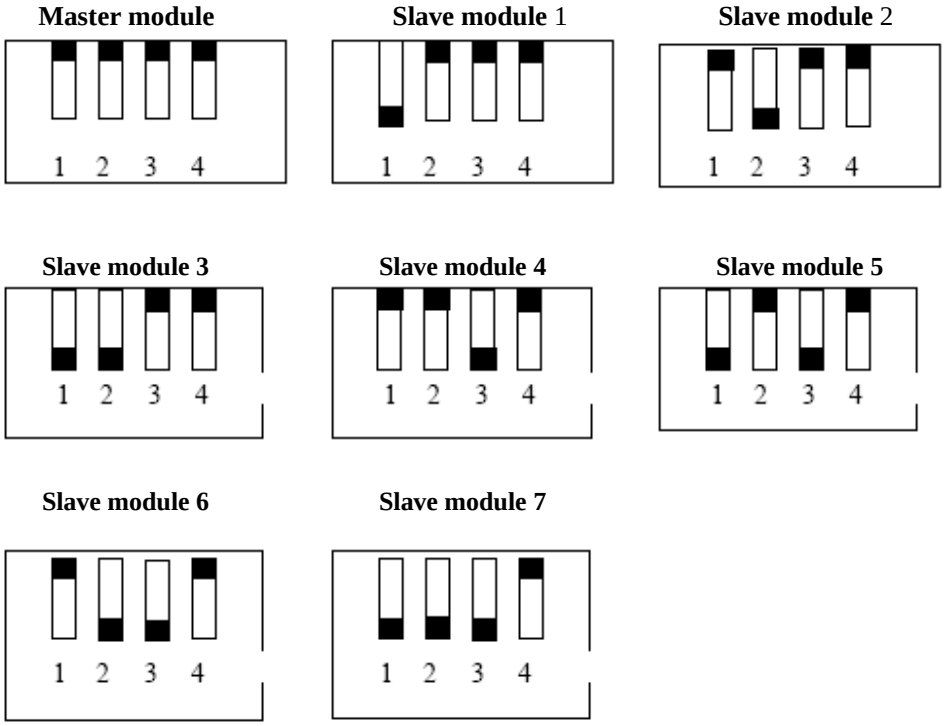

Note: The address code switch "■" in the figure shows the actual position of address code switch.

Warning: The setting of the address switch should be carried out when the units are powered off. The adjusting of the address switch with the power on is strictly prohibited.

b. Close the master switch in the power control cabinet and the 3-phase automatic air breakers for all the modules to preheat the compressor（in general, not less than 8 hr, and may be not less than12hr in winter when the temperature is low）. To avoid an accident power on of compressor during the preheating, it is available to press down the emergency switch at the door of electric control box for the master module.

Warning: If the units are started before an enough pre-heating of the compressor, the compressor may be damaged.

c. Position of the display board: For detail operation methods, please refer to the operation instructions for display board.

a) Set the offset of the master, slave modules temp;

b) Set the cooling, heating mode;

c) Set the actual time;

d) Automatic ON/OFF setting.

3. Follow "7 adjustment and running",《Operation Instructions for Application Installation》for the adjustment.

Remarks: At debugging, if failure signal is found for the system when the display board is opened, please refer to "failure check" in "setting operation of display board" and to eliminate the failure signal. Only after confirming that there is no failure, could the unit be started up and the debugging be carried out.