TECHNICAL SERVICE MANUAL

TECHNICAL SERVICE MANUAL

2001

GREE ELECTRIC APPLIANCES,INC. OF ZHUHAI

TECHNICAL SERVICE MANUAL

(2001 VERSION)

GREE ELECTRIC APPLIANCES, INC. OF ZHUHAI
Jinji West Rd. Qianshan Zhuhai
Guangdong P.R.China

Introduction

In this technical service manual, you will find rich references to Gree's main products for the year 2001, including photos, technical specifications, explosive views, spare parts lists and circuit diagrams. Service people and engineers of Gree's customers and distributors would find it a very handy source of technical information of our products.

Technical Support Department

GREE ELECTRIC APPLIANCES, INC. OF ZHUHAI

May 2001

Editor In Chief: Chen jianmin

Compiler:
Chen zhian Ouyang jun Zhou zonglian Sheng yan Guo tongyu Yan yu Ling ling Wu dabin Zeng qingwei Wei chi Gui xiaoyin Wang xiaoqin Li haifeng Deng pengbiao Wang li Huang xinya Li peiri

Proofreader:
Yang chunsheng Dong kaijun Li jiantao Lian junbing Wu xiaotu Lin kun Li jiangyun Huang weiqing Liu beiquan Xu jianqi Yam jia Ji xianqin Kou bin Xiao kai Chen ming Zhu yunqing Zhang yangbin Zhou yuexia Liu jingning Wang xin Zhang guoqiang

CONTENT

1. Birdline series 1
   1.1 Summary 1
   1.2 Technical specifications 2
   1.3 Performance curve 10
   1.4 Outlines and dimensions of indoor unit 13
   1.5 Outlines and dimensions of outdoor unti 14
   1.6 Explosive view of indoor unit 15
   1.7 Spare parts list of indoor unit 16
   1.8 Explosive view of outdoor unit 22
   1.9 Spare parts list of outdoor unit 23
   1.10 Circuit diagram 26
   1.11 PCB function manual 36
2. Gree2000 series 47
   2.1 Summary 47
   2.2 Technical specifications 49
   2.3 Performance curve 57
   2.4 Outlines and dimensions of outdoor unit 60
   2.5 Outlines and dimensions of outdoor unit 61
   2.6 Explosive view of indoor unit 63
   2.7 Spare parts list of indoor unit 64
   2.8.1 Explosive view of outdoor unit 68
   2.8.2 Spare parts list of outdoor unit 69
   2.9.1 Explosive view of outdoor unit (for R407C & tropical model) 71
   2.9.2 Spare parts list of outdoor unit (for R407C & tropical model) 72
   2.10 Circuit diagram 73
   2.11 PCB function manual 81
3. Fengyun series 87
   3.1 Summary 87
   3.2 Technical specifications 88
   3.3 Performance curve 96
   3.4 Outlines and dimensions of indoor unit 99
   3.5 Outlines and dimensions of outdoor unit 100
   3.6 Explisive view of indoor unit 101
   3.7 Spare parts list of indoor unit 102
   3.8 Explosive view of outdoor unit 106

3.9 Spare parts list of outdoor unit 107
3.10 Circuit diagram 111
3.11 PCB function manual 115
4. Fengxia series 121
4.1 Summary 121
4.2 Technical specifications 122
4.3 Performance curve 125
4.4 Outlines and dimenxsions of indoor unit 128
4.5 Outlines and dimensions of outdoor unit 129
4.6 Explosive view of indoor unit 130
4.7 Spare partslist of indoor unit 131
4.8 Explosive view of outdoor unit 132
4.9 Spar parts list of outdoor unit 133
4.10 Circuit diagram 134
4.11 PCB function manual 140
5. Butterfly series 145
5.1 Summary 145
5.2 Technical specifications 146
5.3 Performance curve 148
5.4 Outlines and dimensions of indoor unit 151
5.5 Outlines and dimensions of outdoor unit 152
5.6 Explosive view of indoor unit 153
5.7 Spare parts list of indoor unit 154
5.8 Explosive view of outdoor unit 155
5.9 Spare parts list of outdoor unit 156
5.10 Circuit diagram 157
5.11 PCB function manual 158
6. Inverter series 163
6.1 Summary 163
6.2 Technical specifications 164
6.3 Performance curve 166
6.4 Outlines and dimensions of indoor unit 169
6.5 Outlines and dimensions of outdoor unit 170
6.6 Explosive view of indoor unit 171
6.7 Spare parts list of indoor unit 172
6.8 Explosive view of outdoor unit 173
6.9 Spare parts list of outdoor unit 174
6.10 Circuit diagram 176
6.11 PCB function manual 180
7. Dual split birdline series 185

7.1 Summary 185
7.2 Technical specifications 186
7.3 Performance curve 193
7.4 Outlines and dimensions of indoor unit 196
7.5 Outlines and dimensions of outdoor unit 197
7.6 Explosive view of indoor unit 199
7.7 Spare parts list of indoor unit 200
7.8 Explosive view of outdoor unit 204
7.9 Spare parts list of outdoor unit 205
7.10 Circuit diagram 208
7.11 PCB function manual 214
8. Cassette type series 225
8.1 Summary 225
8.2 Technical specifications 227
8.3 Outlines and dimensions of indoor unit 235
8.4 Outlines and dimensions of outdoor unit 236
8.5 Explosive view of indoor panel 238
8.6 Spare parts list of indoor panel 239
8.7 Explosive view of indoor unit 240
8.8 Spare parts list of indoor unit 241
8.9.1 Explosive view of outdoor unit (for 50 model) 245
8.9.2 Spare parts list of outdoor unit (for 50 model) 246
8.10.1 Explosive view of outdoor unit (for 70 model) 247
8.10.2 Spare parts list of outdoor unit (for 70 model) 248
8.11.1 Explosive view of outdoor unit (for 120 model) 249
8.11.2 Spare parts list of outdoor unit (for 120 model) 250
8.12 Installation guide 251
8.13 Circuit diagram 262
8.14 PCB function manual 272
9. Floor standing type series 276
9.1 Summary 276
9.2 Technical specifications 278
9.3 Outlines and dimensions of indoor unit 280
9.4 Outlines and dimensions of outdoor unit 282
9.5 Explosive view of indoor unit 284
9.6 Spare parts list of indoor unit 285
9.7.1 Explosive view of outdoor unit (for 70 model) 289
9.7.2 Spare parts list of outdoor unit (for 70 model) 290
9.8.1 Explosive view of outdoor unit (for 120 model) 291
9.8.2 Spare parts list of outdoor unit (for 120 model) 292

9.9 Installation guide ····· 293
9.10 Circuit diagram ····· 300
9.11 PCB function manual ····· 306
10. Window type series ····· 309
10.1 Summary ····· 309
10.2 Technical specifications ····· 311
10.3 Performance curve ····· 317
10.4 Outlines and dimensions ····· 320
10.5 Explosive view and spare parts list or KC-18 & GJ7 model ····· 324
10.6 Explosive view and spare parts list of KC-25 & GJ10 model ····· 326
10.7 Explosive view and spare parts list of KC-32 & GJ12 model ····· 330
10.8 Explosive view and spare parts list of KC-46 & KC-46 model ····· 334
10.9 Circuit diagram ····· 338
10.10 PCB function manual ····· 345
11. Mobile Air-conditioner KY-20 ····· 348
11.1 Summary ····· 348
11.2 Technical specifications ····· 349
11.3 Outlines and dimensions ····· 353
11.4 Explosive view ····· 354
11.5 Spare parts list ····· 355
11.6 Installation guide ····· 358
11.7 Circuit diagram ····· 361
11.8 PCB function manual ····· 364
12. Mobile Air-conditioner KY-32 ····· 369
12.1 Summary ····· 369
12.2 Technical specifications ····· 370
12.3 Outlines and dimensions ····· 372
12.4 Explosive view ····· 373
12.5 Spare parts list ····· 374
12.6 Installation guide ····· 376
12.7 Circuit diagram ····· 379
12.8 PCB function manual ····· 381
Annex 1 Instruction manual of remote controller Y512 ····· 387
Annex 2 Non-ducted air conditioners and heat pumps-Testing and rating for performance ··· 397
Annex 3 PCB Senser resistance ····· 413

1. Birdline Series

1.1 Summary.

figure 1-1

MODEL		NOTE
KF-20GW/A12	KFR-20GW/A12	CE STANDARD
KF-25GW/A12	KFR-25GW/A12	1Ph 220-230V~50Hz
KF-32GW/A12	KFR-32GW/A12	R22
KF-20GW/NA12	KFR-20GW/NA12	CE STANDARD
KF-25GW/NA12	KFR-25GW/NA12	1Ph 220-230V~50Hz
KF-32GW/NA12	KFR-32GW/NA12	R407C
GSW9-22L/A	GSW9-22R/A	1Ph 220V~60Hz
GSW12-22L/A	GSW12-22R/A	R22

1.2 Technical specifications.

Table 1-1

Model			KF-20GW/A12	KFR-20GW/A12	
Function			Cooling	cooling	Heating
Power supply			1Ph 220~230V-50Hz		
Capacity(W)			2000	2000	2400
Rated input(W)			750	750	790
Rater current(A)			3.26	3.26	3.43
Air flow(m^3/h)			400	400	400
Dehumidifying volume(L/h)			0.7	0.76	---
EER(W/W)			2.83	2.82	2.97
Indoor unit	Model		KF-20G/A12	KFR-20G/A12	
	Motor fan speed(rpm)		960/900/850		
	Output power(W)		8		
	Fan type/piece		Cross flow fan-1		
	Diameter-length		ϕ 97mm-585		
	Evaporator		Aluminum fin-copper tube		
	Row-fin distance(mm)		2-1.6		
	Working area(m^2)		0.14		
	Swing motor		MP24GA		
	Input/speed(W)		2		
	Fuse(A)		Controller3.15A transformer0.2A		
	Working capacitor(μF)		1		
	Noise(dB(A))		36		
	Dimension(width-height-depth)(mm)		770-250-180		
	Net weight(Kg)		8.5		
Outdoor unit	Model		KF-20W/A12	KFR-20W/A12	
	Input power(W)				
	Current(A)				
	L.R.A.(A)		12	15	
	Throttling method		Capillary		
	Compressor model		Rotary		
	Compressor		SG333DB1	SG433EB2	
	Starting method		Capacitor starting		
	Working temp.		⩽ 115℃		
	Condenser		Aluminum fin-copper tube		
	Pipe-diameter		9.52	9.52	
	Row-fin distance(mm)		1-2.0		
	Working area		0.4		
	Fan motor power(W)/speed(rpm)		25/750		
	Type-piece		Axial fan-1		
	Diameter(mm)		400		
	Defrosting method		Auto defrost		
	Noise(dB(A))		51		
	Dimension(width-height-depth)(mm)		848-540-320		
	Net weight(Kg)		32		
	Refrigerant charge		R22/0.65	R22/0.75	
Connecting pipe	Length(m)		4		
	Outer diameter of connecting pipe	Liquid pipe(mm)	6 (1/4")		
		Gas pipe(mm)	9.52 (3/8")		
	Max distance	Height(m)	5		
		Length(m)	10		

The technical date are subject to change without notice .Please refer to the nameplate of the unit.

Table 1-2

Model			KF-25GW/A12	KFR-25GW/A12	
Function			Cooling	Cooling	Heating
Power supply			1Ph 220~230V-50Hz		
Capacity(W)			2500	2500	3100
Rated input(W)			1000	1000	1050
Rater current(A)			435	4.35	4.57
Air flow(m^3/h)			450		
Dehumidifying volume(L/h)			1.2	1.2	---
EER(W/W)			2.5	2.67	2.95
Indoor unit	Model		KF-25G/A12	KFR-25G/A12	
	Motor fan speed(rpm)		1060/990/910		
	Output power(W)		8		
	Fan type/piece		Cross flow fan-1		
	Diameter-length		ϕ 97mm-583		
	Evaporator		Aluminum fin-copper tube		
	Row-fin distance(mm)		2-1.6		
	Working area(m^2)		0.14		
	Swing motor		MP24GA		
	Input/speed(W)		2		
	Fuse(A)		Controller3.15A transformer0.2A		
	Working capacitor(μF)		1		
	Noise(dB(A))		⩽ 36		
	Dimension(width-height-depth)(mm)		770-250-180		
	Net weight(Kg)		8.5		
Outdoor unit	Model		KF-25W/A12	KFR-25W/A12	
	Input power(W)		1042	980/1046	
	Current(A)		463	4.32/4.26	
	L.R.A.(A)		23	23	
	Throttling method		Capillary		
	Compressor		SG633QA1UA	RH174VHAC	
	Starting method		Capacitor starting		
	Working temp.		⩽ 115℃		
	Condenser		Aluminum fin-copper tube		
	Pipe-diameter		9.52		
	Row-fin distance(mm)		1-2.0	1-1.6	
	Working area		0.4		
	Fan motor power(W)/speed(rpm)		25 / 730	30/795	
	Type-piece		Axial fan-1		
	Diameter(mm)		400		
	Defrosting method		Auto defrost		
	Noise(dB(A))		52		
	Dimension(width-height-depth)(mm)		848-540-320		
	Net weight(Kg)		32		
	Refrigerant charge/(kg)		R22/0.85	R22/0.8	
Connecting pipe	Length(m)		4		
	Outer diameter of connecting pipe	Liquid pipe(mm)	6(1/4")		
		Gas pipe(mm)	9.52(3/8")		
	Max distance	Height(m)	5		
		Length(m)	10		

The technical date are subject to change without notice .Please refer to the nameplate of the unit.

Table 1-3

Model			KF-32GW/A12	KFR-32GW/A12	
Function			Cooling	Cooling	Heating
Power supply			1Ph 220~230V-50Hz		
Capacity(BTU/h)			12000	12000	13000
Rated input(W)			1195	1318	1430
Rater current(A)			5.33	6.25	6.74
Air flow(m^3/h)			480		
Dehumidifying volume(L/h)			1.4	1.4	---
EER(W/W)			2.5	2.6	2.56
Indoor unit	Model		KF-32G/A12	KFR-32G/A12	
	Motor fan speed(rpm)		1190/1090/990		
	Output power(W)		14		
	Fan type/piece		Cross flow fan-1		
	Diameter-length		ϕ 97mm-583		
	Evaporator		Aluminum fin-copper tube		
	Row-fin distance(mm)		2-1.4		
	Working area(m^2)		0.14		
	Swing motor		MP24GA		
	Input/speed(W)		2		
	Fuse(A)		Controller3.15A transformer0.2A		
	Working capacitor(μF)		1		
	Noise(dB(A))		⩽ 40		
	Dimension(width-height-depth)(mm)		770-250-180		
	Net weight(Kg)		8.5		
Outdoor unit	Model		KF-32W/A12	KFR-32W/A12	
	Input power(W)		1179	1302	1414
	Current(A)		5.33	6.25	6.74
	L.R.A.(A)		29	31	31
	Throttling method		Capillary		
	Compressor		RH207VHKC	C-RV232BH1AA	
	Starting method		Capacitor starting		
	Working temp.		⩽ 115℃		
	Condenser		Aluminum fin-copper tube		
	Pipe-diameter		9.52		
	Row-fin distance(mm)		1-1.6	1.5-1.6	
	Working area		0.4		
	Fan motor power(W)/speed(rpm)		48 / 880	48/880	
	Type-piece		Axial fan-1		
	Diameter(mm)		400		
	Defrosting method		Auto defrost		
	Noise(dB(A))		56		
	Dimension(width-height-depth)(mm)		848-540-320		
	Net weight(Kg)		40		
	Refrigerant charge		R22/0.8	R22/1.0	
Connecting pipe	Length(m)		4		
	Outer diameter of connecting pipe	Liquid pipe(mm)	6(1/4")		
		Gas pipe(mm)	12(1/2")		
	Max distance	Height(m)	5		
		Length(m)	10		

The technical date are subject to change without notice .Please refer to the nameplate of the unit.

Table 1-4

Model			KF-20GW/NA12	KFR-20GW/NA12	
Function			Cooling	cooling	Heating
Power supply			1Ph 220~230V-50Hz		
Capacity(W)			2000	2000	2400
Rated input(W)			830	830	850
Rater current(A)			3.8		3.9
Air flow(m^3/h)			400		
Dehumidifying volume(L/h)			0.7		
EER(W/W)			2.5	2.8	
Indoor unit	Model		KF-25G/NA12	KFR-25GW/NA12	
	Motor fan speed(rpm)		1000/940/880		
	Output power(W)		8		
	Fan type/piece		Cross flow fan-1		
	Diameter-length		ϕ 97mm-583		
	Evaporator		Aluminum fin-copper tube		
	Row-fin distance(mm)		2-1.6		
	Working area(m^2)		0.14		
	Swing motor		MP24GA		
	Input/speed(W)		2		
	Fuse(A)		Controller 3.15A Transformer 0.2A		
	Working capacitor(μ F)		1		
	Noise(dB(A))		36		
	Dimension(width-height-depth)(mm)		770-250-180		
	Net weight(Kg)		8.5		
Outdoor unit	Model		KF-20W/NA12	KFR-20W/NA12	
	Input power(W)		810	810	830
	Current(A)		3.7	3.7	3.8
	L.R.A.(A)		19.5		
	Throttling method		Capillary		
	Compressor model		Rotary		
	Compressor		C-1RN70H5A		
	Starting method		Capacitor starting		
	Working temp.		⩽ 115℃		
	Condenser		Aluminum fin-copper tube		
	Pipe-diameter		9.52		
	Row-fin distance(mm)		1-2.0		
	Working area		0.4		
	Fan motor power(W)/speed(rpm)		25/800		
	Type-piece		Axial fan-1		
	Diameter(mm)		400		
	Defrosting method		Auto defrost		
	Noise(dB(A))		52		
	Dimension(width-height-depth)(mm)		848-540-320		
	Net weight(Kg)		32		
	Refrigerant charge		R407C 0.8	R407C 0.85	
Connecting pipe	Length(m)		4		
	Outer diameter of connecting pipe	Liquid pipe(mm)	6(1/4")		
		Gas pipe(mm)	9.52(3/8")		
	Max distance	Height(m)	5		
		Length(m)	10		

The technical date are subject to change without notice .Please refer to the nameplate of the unit.

Table 1-5

Model			KF-25GW/NA12	KFR-25GW/NA12	
Function			Cooling	Cooling	Heating
Power supply			1Ph 220~230V-50Hz		
Capacity(W)			2500	2500	2800
Rated input(W)			930	930	1020
Rater current(A)			4.2		4.5
Air flow(m^3/h)			450		
Dehumidifying volume(L/h)			1.2		
EER(W/W)			2.5	2.8	
Indoor unit	Model		KF-25G/NA12	KFR-25G/NA12	
	Motor fan speed(rpm)		1060/990/910		
	Output power(W)		8		
	Fan type/piece		Cross flow fan-1		
	Diameter-length		ϕ 97mm-583		
	Evaporator		Aluminum fin-copper tube		
	Row-fin distance(mm)		2-1.6		
	Working area(m^2)		0.14		
	Swing motor		MP24GA		
	Input/speed(W)		2		
	Fuse(A)		Controller3.15A Transformer0.2A		
	Working capacitor(μ F)		1		
	Noise(dB(A))		36		
	Dimension(width-height-depth)(mm)		770-250-180		
	Net weight(Kg)		8.5		
Outdoor unit	Model		KF-25W/NA12	KFR-25W/NA12	
	Input power(W)		910	910	1000
	Current(A)		4.1		4.4
	L.R.A.(A)		23		
	Throttling method		Capillary		
	Compressor model		Rotary		
	Compressor		C-RN80H5A		
	Starting method		Capacitor starting		
	Working temp.		⩽ 115℃		
	Condenser		Aluminum fin-copper tube		
	Pipe-diameter		9.52		
	Row-fin distance(mm)		1-2.0	1-1.6	
	Working area		0.4		
	Fan motor power(W)/speed(rpm)		30/800		
	Type-piece		Axial fan-1		
	Diameter(mm)		400		
	Defrosting method		Auto defrost		
	Noise(dB(A))		52		
	Dimension(width-height-depth)(mm)		848-540-320		
	Net weight(Kg)		32		
	Refrigerant charge		R407C 0.85		
Connecting pipe	Length(m)		4		
	Outer diameter of connecting pipe	Liquid pipe(mm)	6(1/4")		
		Gas pipe(mm)	9.52(3/8")		
	Max distance	Height(m)	5		
		Length(m)	10		

The technical date are subject to change without notice .Please refer to the nameplate of the unit.

Table 1-6

Model			KF-32GW/NA12	KFR-32GW/NA12	
Function			Cooling	Cooling	Heating
Power supply			1Ph 220~230V-50Hz		
Capacity(W)			3200	3200	3800
Rated input(W)			1370	1370	1350
Rater current(A)			6.2	6.2	6.1
Air flow(m^3/h)			480		
Dehumidifying volume(L/h)			1.4		
EER(W/W)			2.4	2.4	2.6
Indoor unit	Model		KF-32G/NA12	KFR-32G/NA12	
	Motor fan speed(rpm)		1190/1090/990		
	Output power(W)		20		
	Fan type/piece		Cross flow fan-1		
	Diameter-length		ϕ 97mm-583		
	Evaporator		Aluminum fin-copper tube		
	Row-fin distance(mm)		2-1.4		
	Working area(m^2)		0.14		
	Swing motor		MP24GA		
	Input/speed(W)		2		
	Fuse(A)		Controller3.15A Transformer0.2A		
	Working capacitor(μF)		1		
	Noise(dB(A))		40		
	Dimension(width-height-depth)(mm)		770-250-180		
	Net weight(Kg)		8.5		
Outdoor unit	Model		KF-32W/NA12	KFR-32W/NA12	
	Input power(W)		1340	1340	1330
	Current(A)		6.1	6.1	6
	L.R.A.(A)		33.5		
	Throttling method		Capillary		
	Compressor model		Rotary		
	Compressor		C-RN110H5A		
	Starting method		Capacitor starting		
	Working temp.		⩽ 115℃		
	Condenser		Aluminum fin-copper tube		
	Pipe-diameter		9.52		
	Row-fin distance(mm)		1-1.6		
	Working area		0.4		
	Fan motor power(W)/speed(rpm)		48/800		
	Type-piece		Axial fan-1		
	Diameter(mm)		400		
	Defrosting method		Auto defrost		
	Noise(dB(A))		56		
	Dimension(width-height-depth)(mm)		848-540-320		
	Net weight(Kg)		40		
	Refrigerant charge		R407C 0.9		
Connecting pipe	Length(m)		4		
	Outer diameter of connecting pipe	Liquid pipe(mm)	6(1/4")		
		Gas pipe(mm)	12(1/2")		
	Max distance	Height(m)	5		
		Length(m)	10		

The technical date are subject to change without notice .Please refer to the nameplate of the unit.

Table 1-7

Model			GSW9-22L/A	GSW9-22R/A	
Function			Cooling	cooling	Heating
Power supply			1Ph 220V~ 60Hz		
Capacity(W)			2500	2600	3100
Rated input(W)			900	900	930
Rater current(A)			4.1	4.1	4.2
Air flow(m^3/h)			380		
Dehumidifying volum(L/h)			1.2	1.2	---
EER(W/W)			2.78	2.9	3.3
Indoor unit	Model		GSW9-22L/A(I)	GSW9-22R/A(I)	
	Motor fan speed(rpm)		1050/960/900		
	Output power(W)		20		
	Fan type/piece		Cross flow fan-1		
	Diameter-length		ϕ 97mm-583		
	Evaporator		Aluminum fin-copper tube		
	Row-fin distance(mm)		2-1.4		
	Working area(m^2)		0.14		
	Swing motor		MP24GA		
	Input(w)		2		
	Fuse(A)		Controller3.15A transformer0.2A		
	Working capacitor(μ F)		1		
	Noise(dB(A))		⩽ 36		
	Dimension(width-height-depth)(mm)		770-250-180		
	Net weight(Kg)		8.5		
Outdoor unit	Model		GSW9-22L/A(O)	GSW9-22R/A(O)	
	Input power(W)		908	919	
	Current(A)		4.17	4.18	
	L.R.A.(A)		26	26	
	Throttling method		Capillary		
	Compressor		2P14S236A1J	2P14S236A1J	
	Starting method		Capacitor starting		
	Working temp.		⩽ 115℃		
	Condenser		Aluminum fin-copper tube		
	Pipe-diameter		9.52		
	Row-fin distance(mm)		1-2.0	1-1.6	
	Working area		0.4		
	Fan motor power(W)/speed(rpm)		30 / 730	30/800	
	Type-piece		Axial fan-1		
	Diameter(mm)		400		
	Defrosting method		Auto defrost		
	Noise(dB(A))		52		
	Dimension(width-height-depth)(mm)		848-540-320		
	Net weight(Kg)		32		
	Refrigerant charge		R22/0.80	R22/0.82	
Connecting pipe	Length(m)		4		
	Outer diameter of connecting pipe	Liquid pipe(mm)	1/4"		
		Gas pipe(mm)	3/8"		
	Max distance	Height(m)	5		
		Length(m)	10		

The technical date are subject to change without notice .Please refer to the nameplate of the unit.

Table 1-8

Model			GSW12-22L/A	GSW12-22R/A	
Function			Cooling	Cooling	Heating
Power supply			1Ph 220V~ 60Hz		
Capacity(W)			3200	3200	3800
Rated input(W)			1240	1180	1260
Rater current(A)			5.63	5.36	5.73
Air flow(m^3/h)			450		
Dehumidifying volume(L/h)			1.4	1.4	---
EER(W/W)			2.6	2.7	3.0
Indoor unit	Model		GSW12-22L/A(I)	GSW12-22R/A(I)	
	Motor fan speed(rpm)		1200/1100/1000		
	Output power(W)		20		
	Fan type/piece		Cross flow fan-1		
	Diameter-length		ϕ 97mm-583		
	Evaporator		Aluminum fin-copper tube		
	Row-fin distance(mm)		2-1.4		
	Working area(m^2)		0.14		
	Swing motor		MP24GA		
	Input/speed(W)		2		
	Fuse(A)		Controller3.15A transformer0.2A		
	Working capacitor(μF)		1		
	Noise(dB(A))		⩽ 40		
	Dimension(width-height-depth)(mm)		770-250-180		
	Net weight(Kg)		8.5		
Outdoor unit	Model		GSW12-22L/A(O)	GSW12-22R/A(O)	
	Input power(W)		1150	1230	
	Current(A)		5.3	5.6	
	L.R.A.(A)		33	33	
	Throttling method		Capillary		
	Compressor		2P19S236A1J	2P19S236A1J	
	Starting method		Capacitor starting		
	Working temp.		⩽ 115℃		
	Condenser		Aluminum fin-copper tube		
	Pipe-diameter		9.52		
	Row-fin distance(mm)		1-1.6		
	Working area		0.4		
	Fan motor power(W)/speed(rpm)		36 / 800	36/880	
	Type-piece		Axial fan-1		
	Diameter(mm)		400		
	Defrosting method		Auto defrost		
	Noise(dB(A))		56		
	Dimension(width-height-depth)(mm)		887-540-320		
	Net weight(Kg)		40		
	Refrigerant charge		R22/0.85	R22/0.85	
Connecting pipe	Length(m)		4		
	Outer diameter of connecting pipe	Liquid pipe(mm)	(1/4")		
		Gas pipe(mm)	(1/2")		
	Max distance	Height(m)	5		
		Length(m)	10		

The technical date are subject to change without notice .Please refer to the nameplate of the unit.

1.3 Performance curve.

- Technical date
- Performance curve as fig1 fig2
- The change relation between low pressure , operation current and temp.

Cooling operation condition :In testing , indoor and outdoor have same work condition.

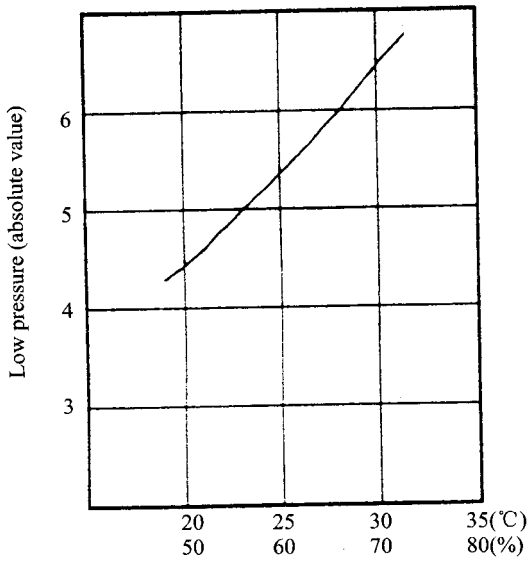

Dry bulb temp. / humidity

(a)

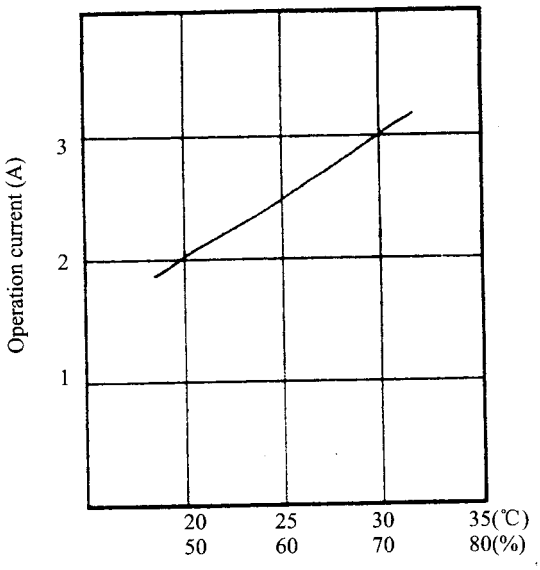

Dry bulb temp. / humidity

(b)

Heating operation
Indoor work condition : dry bulb temp. 21 ,wet bulb temp. 15.5

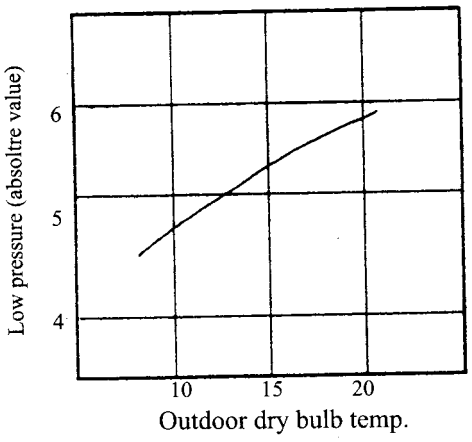

(c)

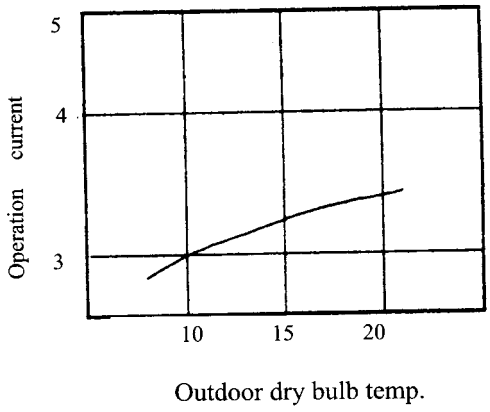

(d)

figure 1-2

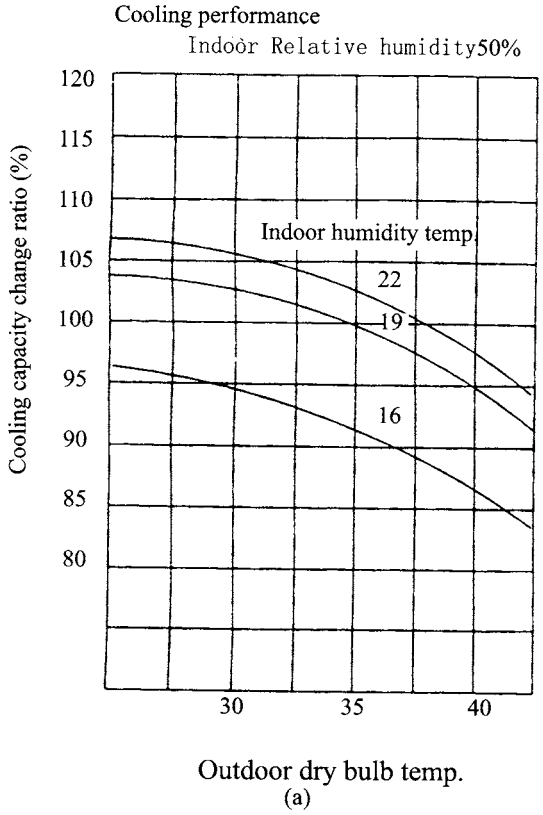
Cooling performance
Indoor Relative humidity50%
Cooling capacity change ratio (%)
120
115
110
105
100
95
90
85
80
Indoor humidity temp.
22
19
16
30
35
40
Outdoor dry bulb temp.
(a)

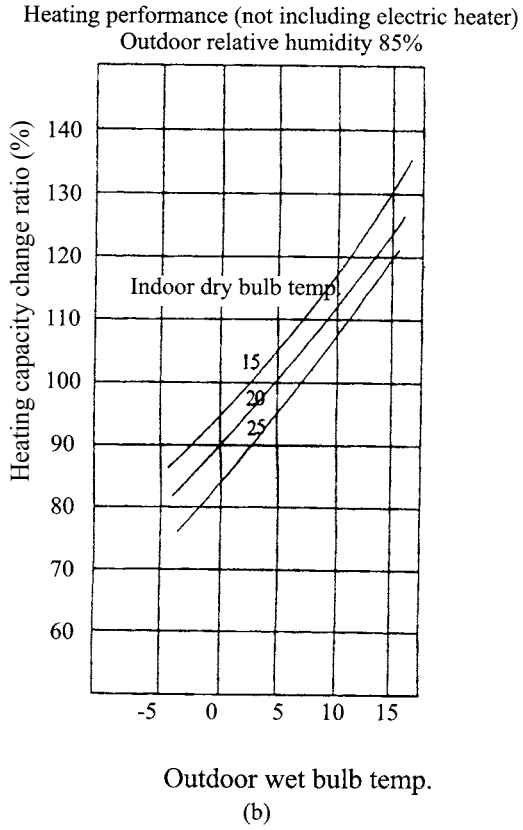
Heating performance (not including electric heater)
Outdoor relative humidity 85%
Heating capacity change ratio (%)
140
130
120
110
100
90
80
70
60
Indoor dry bulb temp.
15
20
25
-5
0
5
10
15
Outdoor wet bulb temp.
(b)

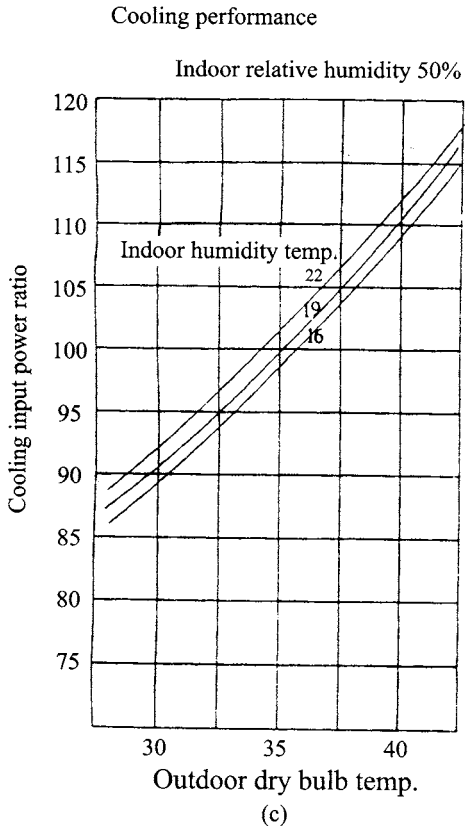
Cooling performance
Indoor relative humidity 50%
Cooling input power ratio
120
115
110
105
100
95
90
85
80
75
Indoor humidity temp.
22
19
16
30
35
40
Outdoor dry bulb temp.
(c)

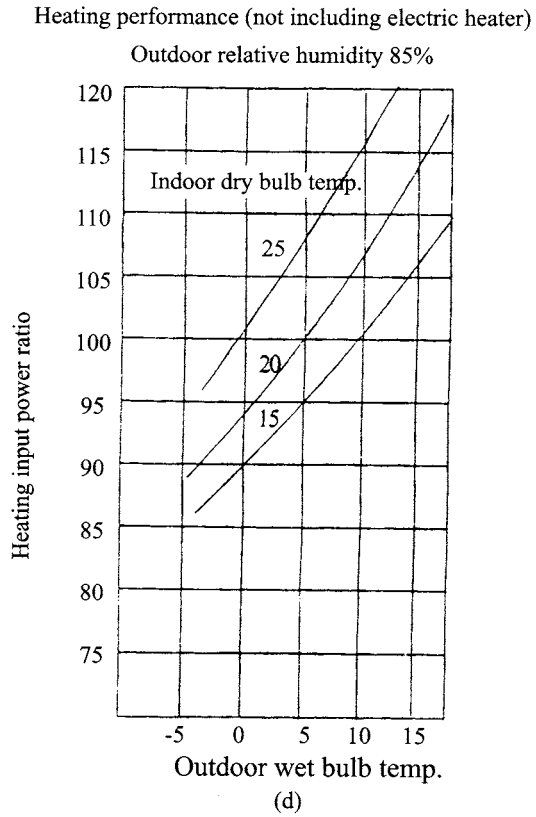
Heating performance (not including electric heater)
Outdoor relative humidity 85%
Heating input power ratio
120
115
110
105
100
95
90
85
80
75
Indoor dry bulb temp.
25
20
15
-5
0
5
10
15
Outdoor wet bulb temp.
(d)

figure 1-3

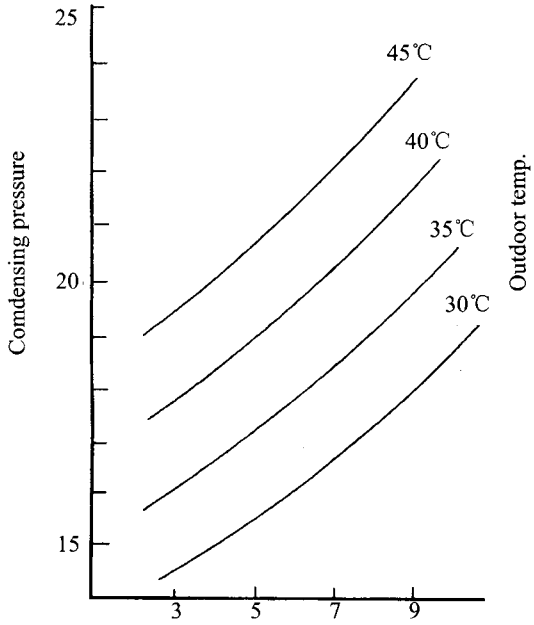

The affection to the charging quantity by pressure under cooling work condition.

(Indoor work condition:dry bulb 27℃,wet bulb 19.5℃)

(e)

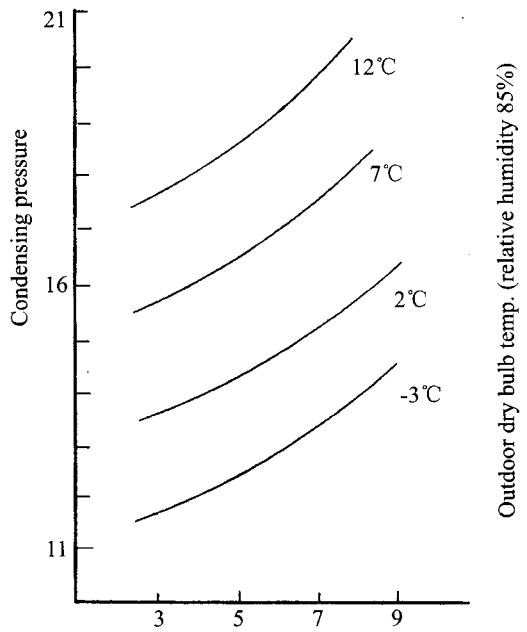

The affection to the charging quantity by pressure under cooling work condition.

(Indoor work condition:dry bulb 21℃)

(f)

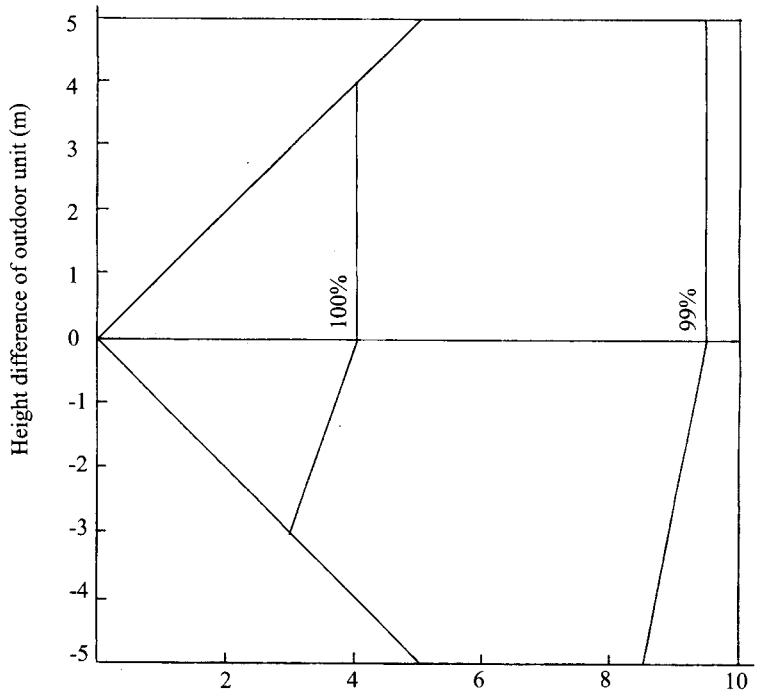

Cooling capacity vary with the length of connection pipe

figure 1-4

1.4 Outlines and dimensions of indoor unit.

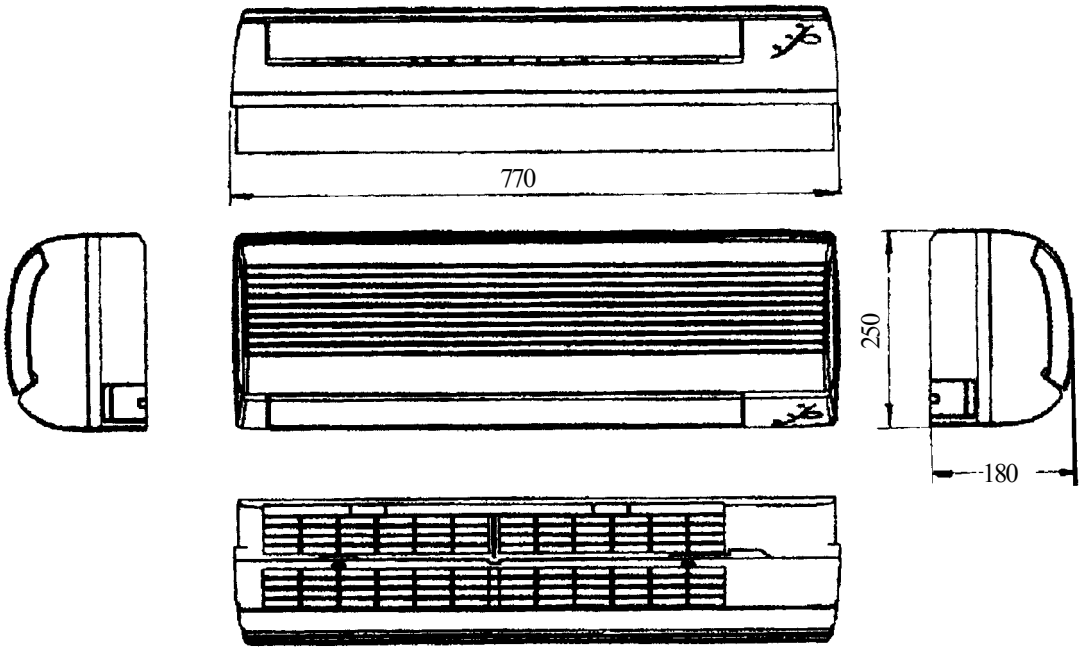

Back view

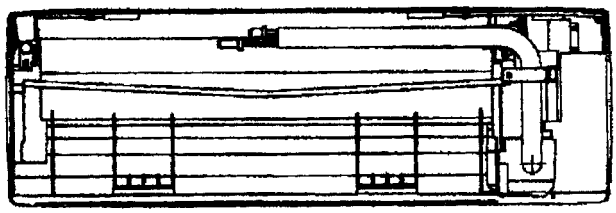

Unit:mm

Ceiling

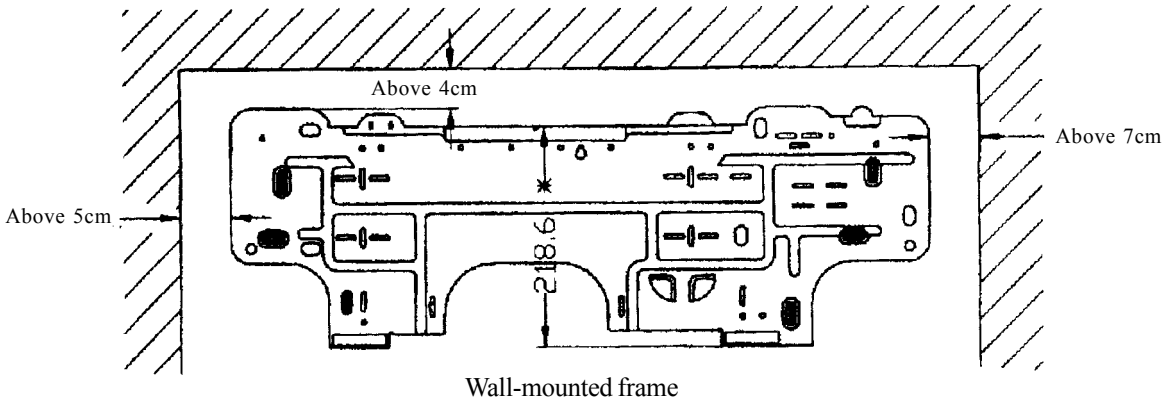

Wall-mounted frame

figure 1-5

1.5 Outlines and dimensions of outdoor unit.

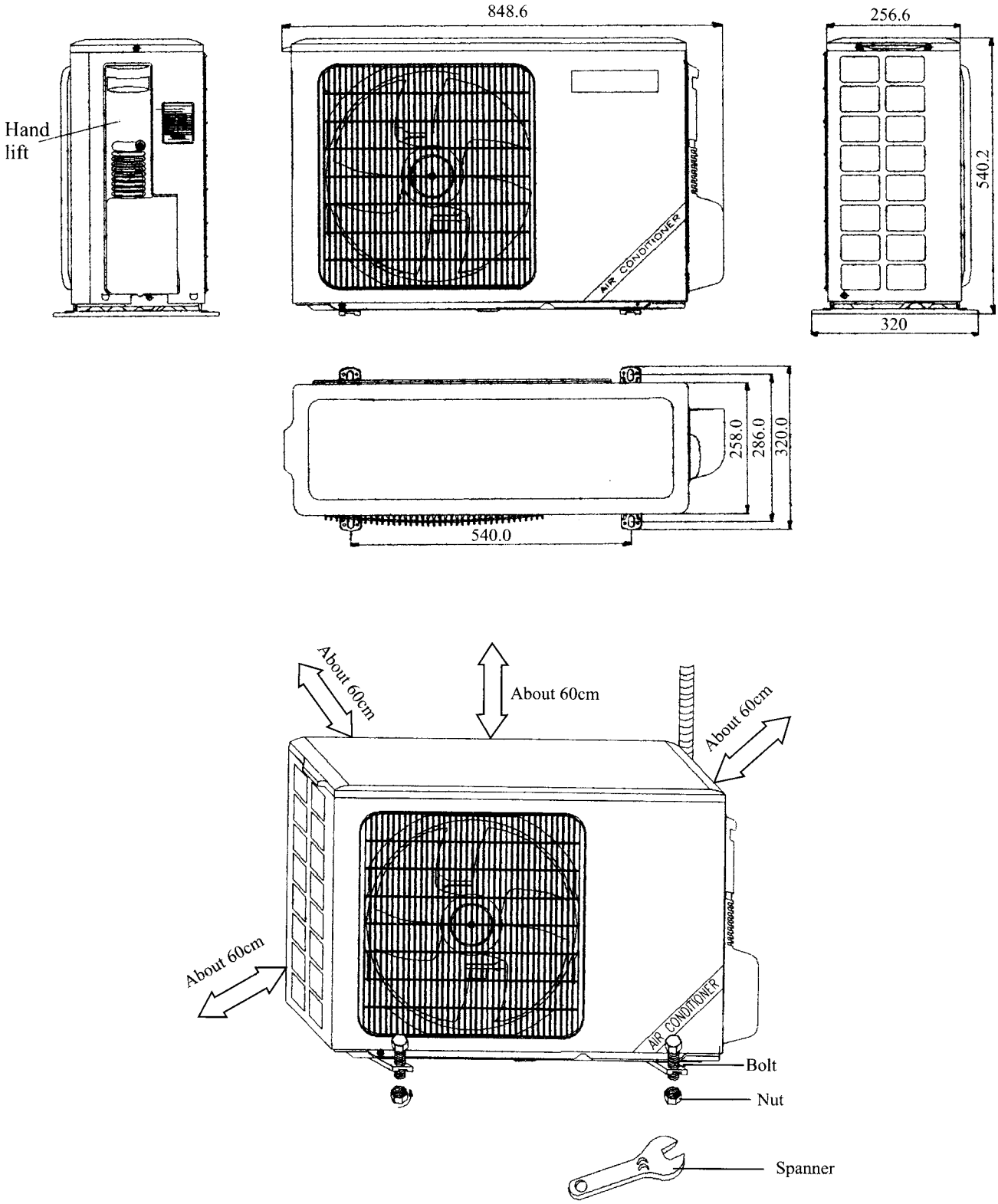

figure 1-6

1.6 Explosive view of indoor unit

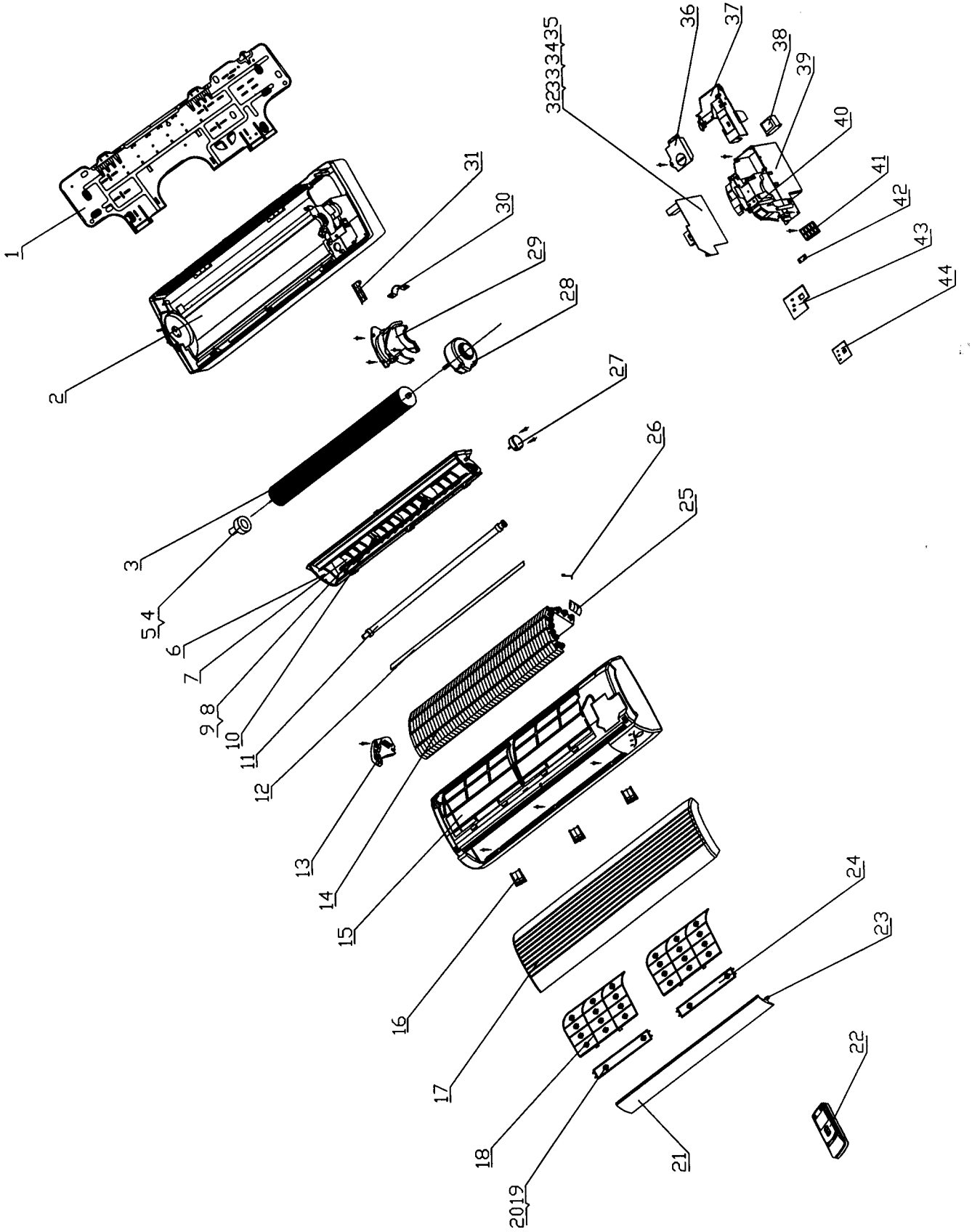

figure 1-7

1.7 Spare parts list of indoor unit

Table 1-9

No	Description		Part No						Qty
			KF-20G/A12	KFR-20G/A12	KF-25G/A12	KFR-25G/A12	KF-32G/A12	KFR-32G/A12	
1	Wall-Mounting Frame	壁挂板	01252438	01252438	01252438	01252438	01252438	01252438	1
2	Rear Case	底壳	22202001	22202001	22202001	22202001	22202001	22202001	1
3	Cross Flow Fan	贯流风叶	10352001	10352001	10352001	10352001	10352001	10352001	1
4	Fan Bearing	风扇轴承	76512210	76512210	76512210	76512210	76512210	76512210	1
5	Ring of Bearing	贯流风叶轴承胶圈	76512203	76512203	76512203	76512203	76512203	76512203	1
6	Water Tray Assy	接水盘组件	20182012	20182012	20182012	20182012	20182012	20182012	1
7	Swing Louver	扫风叶片	10512002	10512002	10512002	10512002	10512002	10512002	12
8	Connecting Lever 1	扫风连杆 1	10582002	10582002	10582002	10582002	10582002	10582002	1
9	Connecting Lever 2	扫风连杆 2	10582003	10582003	10582003	10582003	10582003	10582003	1
10	Manual Lever	拔杆	10582001	10582001	10582001	10582001	10582001	10582001	2
11	Drainage Pipe	排水管	05232411	05232411	05232411	05232411	05232411	05232411	1
12	Evaporator Gate	蒸发器引水板	01094001	01094001	01094001	01094001	01094001	01094001	1
13	Evaporator Supporter	蒸发器角形架	24212001	24212001	24212001	24212001	24212001	24212001	1
14	Evaporator Assy	蒸发器部件	01002048						1
	Evaporator Assy			01002047					1
	Evaporator Assy				01002042	01002042			1
	Evaporator Assy						01002050		1
	Evaporator Assy							01002033	1
15	Front Case Assy	面板体部件	20002111	20002111	20002114	20002111	20002114	20002111	1
16	Screw Cover	螺钉盖	24252001	24252001	24252001	24252001	24252001	24252001	3
17	Front Panel	面板	20002001	20002001	20002001	20002001	20002001	20002001	1
18	Filter	过滤网	11122002	11122002	11122002	11122002	11122002	11122002	2
19	Air Cleaner holder	净化器支架	24222001	24222001	24222001	24222001	24222001	24222001	2
20	Air Cleaner A	净化器滤网 A	11012002	11012002	11012002	11012002	11012002	11012002	1
21	Guide Louver	导风板	10512001	10512001	10512001	10512001	10512001	10512001	1
22	Remote Controller	遥控器Y512	30512505	30512505	30512505	30512505	30512505	30512505	1
23	Guide Louver Bearing	导风板轴套	10542011	10542011	10542011	10542011	10542011	10542011	3
24	Air Cleaner B	净化器滤网 B	11012003	11012003	11012003	11012003	11012003	11012003	1
25	Evaporator Pipe Cover	蒸发器接水槽	06122001	06122001	06122001	06122001	06122001	06122001	1
26	Sensor Insert	感温头插片 B	42020063	42020063	42020063	42020063	42020063	42020063	1
27	Stepping Motor MP24GA	步进电机MP24GA	15212102	15212102	15212102	15212102	15212102	15212102	1
28	Motor FN8G	电机（配左右胶圈）	15012037	15012037					1
	Motor FN13B				15012038	15012038			1
	Motor FN14A						15012108	15012108	1
29	Motor Clamp	电机压板	26112014	26112014	26112014	26112014	26112014	26112014	1
30	Wire Clamp	电线夹	71010103	71010103	71010103	71010103	71010103	71010103	1
31	Pipe Clamp	连接管压板	24242001	24242001	24242001	24242001	24242001	24242001	1
32	PCB 5K512	控制器 5K512	30025507		30025507		30025507		1
	PCB \\ 5K522	控制器 5K522		30025508		30025508		30025508	1
33	Tube Sensor	管温感温包	39000165	39000165	39000165	39000165	39000165	39000165	1
34	Room Sensor	室温感温包	39000164	39000164	39000164	39000164	39000164	39000164	1
35	Fuse 3.15A 250VAC	保险管	46010014	46010014	46010014	46010014	46010014	46010014	1
36	Electric Box Cover 2	电器盒顶盖 2	01412007	01412007	01412007	01412007	01412007	01412007	1
37	Electric Box Cover	电器盒顶盖	20102431	20102431	20102431	20102431	20102431	20102431	1
38	Transformer	电源变压器	43110170	43110170	43110170	43110170	43110170	43110170	1
39	Electric Box	电器盒	20102001	20102001	20102001	20102001	20102001	20102001	1
40	Cable Clamp	压线槽	70482001	70482001	70482001	70482001	70482001	70482001	1
41	Terminal Board T4A3A7377	接线板 T4A3A7377	42010183	42010183	42010183	42010183	42010183	42010183	1
42	Wire Clip	压线片	70482401	70482401	42012415	42012415	42012415	42012415	1
43	LED Holder	指示灯架	24212005	24212005	24212005	24212005	24212005	24212005	1

Table 1-9 Continue

No	Description		Part No						Qty
			KF-20G/A12	KFR-20G/A12	KF-25G/A12	KFR-25G/A12	KF-32G/A12	KFR-32G/A12	
44	LED Board	接收板	30046015	30046015	30046015	30046015	30046015	30046015	1
45	Connecting Cable	电源连接线	40020402	40020402	40020402	40020402	40020403	40020403	1
46	Signal Cable	信号控制线		40032150		40032150		40032150	1
47	Power Cord	电源线	40020202	40020202	40020202	40020202	40020203	40020203	1

The data are subject to change without notice.

The data are subject to change without notice.

Table 1-10

No	Description		Part No						Qty
			KF-20G/NA12	KFR-20G/NA12	KF-25G/NA12	KFR-25G/NA12	KF-32G/NA12	KFR-32G/NA12	
1	Wall-Mounting Frame	壁挂板	01252438	01252438	01252438	01252438	01252438	01252438	1
2	Rear Case	底壳	22202001	22202001	22202001	22202001	22202001	22202001	1
3	Cross Flow Fan	贯流风叶	10352001	10352001	10352001	10352001	10352001	10352001	1
4	Fan Bearing	风扇轴承	76512210	76512210	76512210	76512210	76512210	76512210	1
5	Ring of Bearing	贯流风叶轴承胶圈	76512203	76512203	76512203	76512203	76512203	76512203	1
6	Water Tray Assy	接水盘组件	20182012	20182012	20182012	20182012	20182012	20182012	1
7	Swing Louver	扫风叶片	10512002	10512002	10512002	10512002	10512002	10512002	12
8	Connecting Lever 1	扫风连杆1	10582002	10582002	10582002	10582002	10582002	10582002	1
9	Connecting Lever 2	扫风连杆2	10582003	10582003	10582003	10582003	10582003	10582003	1
10	Manual Lever	拔杆	10582001	10582001	10582001	10582001	10582001	10582001	2
11	Drainage Pipe	排水管	05232411	05232411	05232411	05232411	05232411	05232411	1
12	Evaporator Gate	蒸发器引水板	01094001	01094001	01094001	01094001	01094001	01094001	1
13	Evaporator Supporter	蒸发器角形架	24212001	24212001	24212001	24212001	24212001	24212001	1
14	Evaporator Assy	蒸发器部件	01001093	01001093	01001093	01001093			1
	Evaporator Assy						01002070	01002070	1
15	Front Case Assy	面板体部件	20002111	20002111	20002111	20002111	20002111	20002111	1
16	Screw Cover	螺钉盖	24252001	24252001	24252001	24252001	24252001	24252001	3
17	Front Panel	面板	20002002	20002002	20002002	20002002	20002002	20002002	1
18	Filter	过滤网	11122002	11122002	11122002	11122002	11122002	11122002	2
19	Air Cleaner holder	净化器支架	24222001	24222001	24222001	24222001	24222001	24222001	2
20	Air Cleaner A	净化器滤网A	11012002	11012002	11012002	11012002	11012002	11012002	1
21	Guide Louver	导风板	10512001	10512001	10512001	10512001	10512001	10512001	1
22	Remote Controller	遥控器Y512	30512505	30512505	30512505	30512505	30512505	30512505	1
23	Guide Louver Bearing	导风板轴套	10542011	10542011	10542011	10542011	10542011	10542011	3
24	Air Cleaner B	净化器滤网B	11012003	11012003	11012003	11012003	11012003	11012003	1
25	Evaporator Pipe Cover	蒸发器接水槽	06122001	06122001	06122001	06122001	06122001	06122001	1
26	Sensor Insert	感温头插片B	42020063	42020063	42020063	42020063	42020063	42020063	1
27	Stepping Motor	步进电机	15212102	15212102	15212102	15212102	15212102	15212102	1
28	Motor FN8G	电机(配左右胶圈)	15012037	15012037					1
	Motor FN13B				15012038	15012038			1
	Motor FN14A						15012108	15012108	1
29	Motor Clamp	电机压板	26112014	26112014	26112014	26112014	26112014	26112014	1
30	Wire Clamp	电线夹	71010103	71010103	71010103	71010103	71010103	71010103	1
31	Pipe Clamp	连接管压板	24242001	24242001	24242001	24242001	24242001	24242001	1
32	PCB 5K512	控制器5K522	30025507		30025507		30025507		1
	PCB 5K522	控制器5K512		30025508		30025508		30025508	1
33	Tube Sensor	管温感温包	39000165	39000165	39000165	39000165	39000165	39000165	1
34	Room Sensor	室温感温包	39000164	39000164	39000164	39000164	39000164	39000164	1
35	Fuse 3.15A 250VAC	保险管	46010014	46010014	46010014	46010014	46010014	46010014	1
36	Electric Box Cover 2	电器盒顶盖2	01412007	01412007	01412007	01412007	01412007	01412007	1
37	Electric Box Cover 1	电器盒顶盖1	20102431	20102431	20102431	20102431	20102431	20102431	1
38	Transformer	电源变压器	43110170	43110170	43110170	43110170	43110170	43110170	1
39	Electric Box	电器盒	20102001	20102001	20102001	20102001	20102001	20102001	1
40	Cable Clamp	压线槽	70482001	70482001	70482001	70482001	70482001	70482001	1
41	Terminal Board T4A3A7377	接线板	42010183	42010183	42010183	42010183	42010183	42010183	1
42	Wire Clip	压线片	70482401	70482401	42012415	42012415	42012415	42012415	1
43	LED Holder	指示灯架	24212005	24212005	24212005	24212005	24212005	24212005	1
44	LED Board	接收板	22432001	22432001	22432001	22432001	22432001	22432001	1
45	Connecting Cable	电源连接线	40020402	40020402	40020402	40020402	40020403	40020403	1
46	Signal Cable	信号控制线		40032150		40032150		40032150	1

Table 1-10 continue

No	Description		Part No						Qty
			KF-20G/NA12	KFR-20G/NA12	KF-25G/NA12	KFR-25G/NA12	KF-32G/NA12	KFR-32G/NA12	
47	Power Cord	电源线	40020338	40020338	40020338	40020338	40020338	40020338	1

The data are subject to change without notice.

Table 1-11

No.	Description	名称及规格	Part No.				Qty
			GSW9-22L/A(I)	GSW9-22R/A(I)	GSW12 -22L/A(I)	GSW12-22R/A(I)	
1	Wall-Mounting Frame	壁挂板	01252438	01252438	01252438	01252438	1
2	Rear Case	底壳	22202001	22202001	22202001	22202001	1
3	Cross Flow Fan	贯流风叶	10352001	10352001	10352001	10352001	1
4	Fan Bearing	风扇轴承	76512210	76512210	76512210	76512210	1
5	Ring of Bearing	贯流风叶轴承胶圈	76512203	76512203	76512203	76512203	1
6	Water Tray Assy	接水盘组件	20182012	20182012	20182012	20182012	1
7	Swing Louver	扫风叶片	10512002	10512002	10512002	10512002	12
8	Connecting Lever 1	扫风连杆 1	10582002	10582002	10582002	10582002	1
9	Connecting Lever 2	扫风连杆 2	10582003	10582003	10582003	10582003	1
10	Manual Lever	拔杆	10582001	10582001	10582001	10582001	2
11	Drainage Pipe	排水管	05232411	05232411	05232411	05232411	1
12	Evaporator Gate	蒸发器引水板	01094001	01094001	01094001	01094001	1
13	Evaporator Supporter	蒸发器角形架	24212001	24212001	24212001	24212001	1
14	Evaporator Assy	蒸发器部件	01001015				1
	Evaporator Assy			01002027			1
	Evaporator Assy				01002008		1
	Evaporator Assy					01002022	1
15	Front Case Assy	面板体部件	20002111	20002018	20002111	20002018	1
16	Screw Cover	螺钉盖	24252001	24252001	24252001	24252001	3
17	Front Panel	面板	20002002	20002002	20002002	20002002	1
18	Filter	过滤网	11122002	11122002	11122002	11122002	2
19	Air Cleaner holder	净化器支架	24222001	24222001	24222001	24222001	2
20	Air Cleaner A	净化器滤网 A	11012002	11012002	11012002	11012002	1
21	Guide Louver	导风板	10512001	10512001	10512001	10512001	1
22	Remote Controller	遥控器Y512	30512505	30062503	30512505	30062503	1
23	Guide Louver Bearing	导风板轴套	10542011	10542011	10542011	10542011	3
24	Air Cleaner B	净化器滤网 B	11012003	11012003	11012003	11012003	1
25	Evaporator Pipe Cover	蒸发器接水槽	06122001	06122001	06122001	06122001	1
26	Sensor Insert	感温头插片 B	42020063	42020063	42020063	42020063	1
27	Stepping Motor MP24GA	步进电机MP24GA	15212102	15212102	15212102	15212102	1
28	Motor FN20B-PG	电机(配左右胶圈)	15012035	15012035	15012035	15012035	1
29	Motor Clamp	电机压板	26112014	26112014	26112014	26112014	1
30	Wire Clamp	电线夹	71010103	71010103	71010103	71010103	1
31	Pipe Clamp	连接管压板	24242001	24242001	24242001	24242001	1
32	PCB 5C51F0A	控制器 5C51F0A	30025203		30025203		1
	PCB 5C52E-0A	控制器 5C52E-0A		30025134		30025134	1
33	Tube Sensor	管温感温包	39000116	39000159	39000116	39000159	1
34	Room Sensor	室温感温包	39000155	39000155	39000155	39000155	1
35	Fuse 3.15A 250VAC	保险管	46010014	46010014	46010014	46010014	1
36	Electric Box Cover 2	电器盒顶盖 2	01412006	01412006	01412006	01412006	1
37	Electric Box Cover 1	电器盒顶盖 1	01412014	01412014	01412014	01412014	1
38	Transformer	电源变压器	43110170	43110170	43110170	43110170	1
39	Electric Box	电器盒	20102001	20102001	20102001	20102001	1
40	Cable Clamp	压线槽	70482001	70482001	70482001	70482001	1
41	Terminal Board	接线板	42010183	42010183	42010183	42010183	1
42	Wire Clip	压线片	42012415	42012415	42012415	42012415	1
43	LED Holder	指示灯架	24212005	24212005	24212005	24212005	1
44	LED Board	接收板	30046019	30046019	30046019	30046019	1
45	Connecting Cable	电源连接线	40020312	40020312	40020312	40020312	1
46	Signal Cable	信号控制线		40032119		40032129	1

Table 1-11 continue

No.	Description	名称及规格	Part No.				Qty
			GSW9-22L/A(I)	GSW9-22R/A(I)	GSW12 -22L/A(I)	GSW12-22R/A(I)	
47	Power Cord	电源线	40020338	40020338	40020338	40020338	1

The data are subject to change without notice.

1.8 Explosive view of outdoor unit

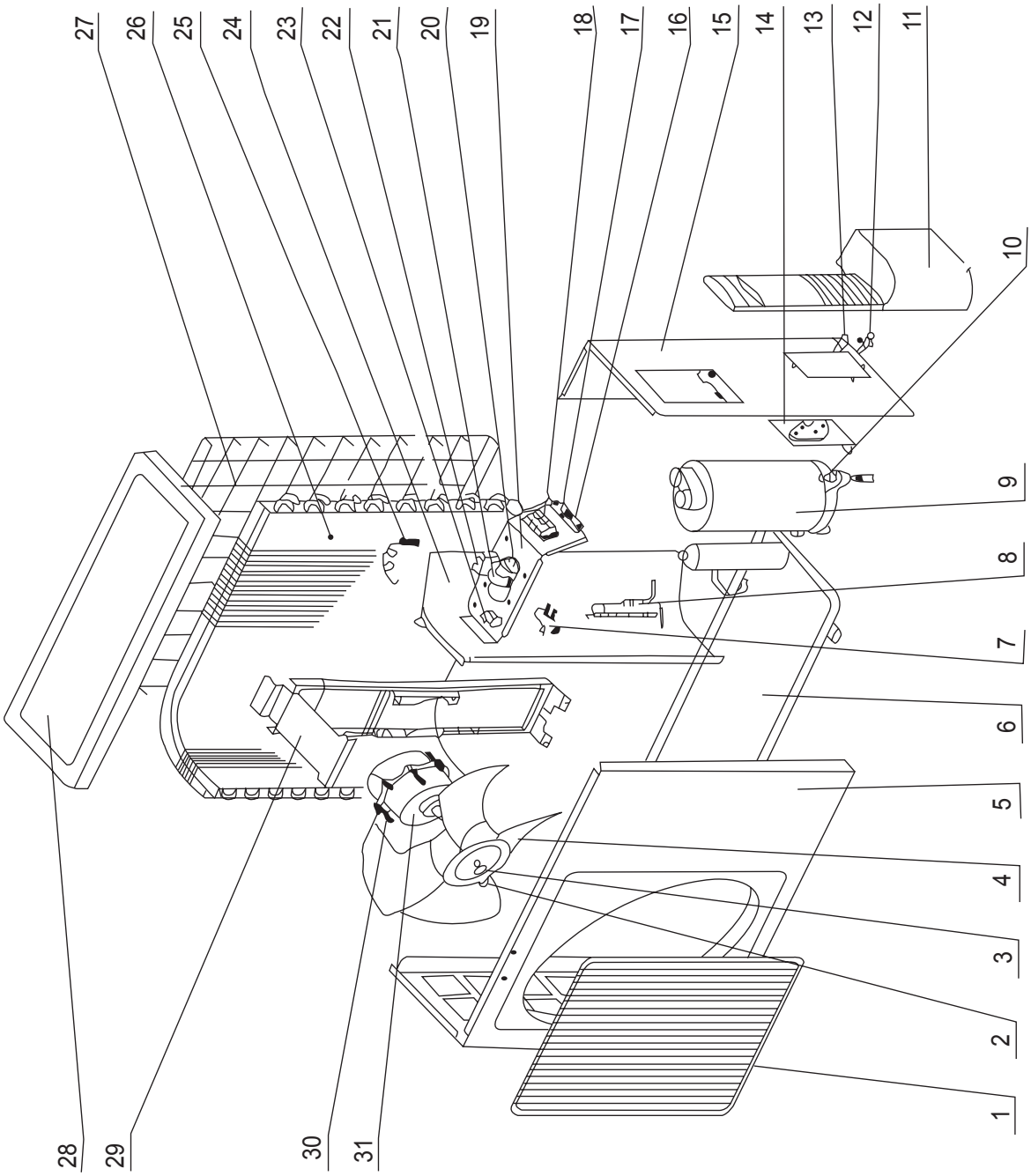

figure 1-8

1.9 Spare parts list of outdoor unit

Table 1-12

No	Description		Part No						Qty
			KF-20W/A12	KFR-20W/A12	KF-25W/A12	KFR-25W/A12	KF-32W/A12	KFR-32W/A12	
1	Front Grill	面板格栅	22413431	22413431	22413431	22413431	22413431	22413431	1
2	Nut M6	螺母 M6	70310132	70310132	70310132	70310132	70310132	70310132	1
3	Washer 6	垫片 6	70410252	70410252	70410252	70410252	70410252	70410252	1
4	Axial Flow Fan	轴流风叶	10333412	10333412	10333412	10333412	10333412	10333412	1
5	Front Plate	面板	01533428	01533428	01533428	01533428	01533428	01533428	1
6	Metal Base	底盘组件	01203004	01203004	01203336	01203324	01203030	01203044	1
7	4-way Valve	四通阀		43000312		43000312		43000312	1
8	Capillary Assy	毛细管组件	03003072	03003047	03001003	03003014	03003030	03003031	1
9	Compressor SG333DB1	压缩机及其配件	00100121						1
	Compressor SG433EB2			00100123					1
	Compressor SG633GA1UA				00100143				1
	Compressor RH174VHAC					00120078			1
	Compressor RH207VHKC						00120082		1
	Compressor C-RV232BH1AA							00100339	1
10	Nut with Washer M8	带垫螺母	70310014	70310014	70310014	70310014	70310014	70310014	3
11	Handle	大提手	26233431	26233431	26233431	26233431	26233431	26233431	1
12	Valve 3/8"	阀门 3/8"	07100145	07100145	07100145	07100145			1
	Valve 1/2"	阀门 1/2"					07100147	07100147	1
13	Valve 1/4"	阀门 1/4"	07100124	07100124	07100124				1
	Valve 1/4"	阀门 1/4"				07100120	07100120	07100120	1
14	Valve Support	阀门支架	01713424	01713424	01713424	01713424	01713424	01713424	1
15	Right Side Plate Assy	右侧板组件	01302000	01302000	01302000	01302000	01302000	01302000	1
16	Wire Clamp	电线夹	71010103	71010103	71010103	71010103	71010103	71010103	2
17	Insulation Gasket	绝缘垫片	70410525	70410523	70410525	70410523	70410525	70410523	1
18	Terminal Board T386A	三位接线板T386A	42011241	42011241	42011241	42011241	42011241	42011241	1
19	Electric Plate	电器盒	01413425	01413425	01413425	01413425	01413425	01413425	1
20	Comp Capacitor 30uF/450V	压缩机电容	33000021	33000021			33000021	33000021	1
	Comp Capacitor 35uF/450V				33010739				1
	Comp Capacitor 25uF/450V					33000020			1
21	Capacitor clamp	电容夹		02143401	02143401	02140001	02143401	02143401	1
22	Fan Capacitor 2.5uF/450V	风机电容	33010026	33010026	33010026	33010026			1
	Fan Capacitor 3uF/450V						33010027	33010026	1
23	Terminal Board 2-8	接线板2-8		42011103		42011103		42011103	1
24	Isolation Sheet Assy	隔板组件	01233417	01233417	01233417	01233417	01233417	01233417	1
25	Tube Sensor	管温感温包				39000115		39000115	1
26	Condenser Assy	冷凝器组件	01103014						1
	Condenser Assy			01103006					1
	Condenser Assy				01103102				1
	Condenser Assy					01103407			1
	Condenser Assy						01103408		1
	Condenser Assy							01103096	1
27	Rear grill Assy	后护网组件	11123402	11123402	11123402	11123402	11123402	11123402	1
28	Top cover Assy	顶盖组件	01253261	01253261	01253261	01253261	01253261	01253261	1
29	Motor Support	电机支架	01703391	01703391	01703391	01703391	01703391	01703391	1
30	Self-tapping Screw	螺钉	10140165	10140165	10140165	10140165	10140165	10140165	4
31	Motor FW25E	风扇电机	15013151	15013151					1
	Motor FW30E				15013153	15013153			1
	Motor FW48A						15013036	15013036	1

The data are subject to change without notice.

Table 1-13

No	Description		Part No						Qty
			KF-20W/NA12	KFR-20W/NA12	KF-25W/NA12	KFR-25W/NA12	KF-32W/NA12	KFR-32W/NA12	
1	Front Grill	面板格栅	22413431	22413431	22413431	22413431	22413431	22413431	1
2	Nut M6	螺母 M6	70310131	70310131	70310131	70310131	70310131	70310131	1
3	Washer 6	垫片 6	70410252	70410252	70410252	70410252	70410252	70410252	1
4	Axial Flow Fan	轴流风叶	10333412	10333412	10333412	10333412	10333412	10333412	1
5	Front Plate	面板	01533428	01533428	01533428	01533428	01533428	01533428	1
6	Metal Base	底盘组件	01203333	01203333	01203305	01203305	01203305	01203305	1
7	4-way Valve	四通阀		43000308		43000308		43000308	1
8	Capillary Assy	毛细管组件	03003156	03003109	03003156	03003155	03003060	03003161	1
9	Compressor C-1RN70H5A	压缩机及其配件	00100321	00100321					1
	Compressor C-RN80H5A				00100328	00100328			1
	Compressor C-RN110H5A						00100335	00100335	1
10	Nut with Washer M8	带垫螺母	70310014	70310014	70310014	70310014	70310014	70310014	3
11	Handle	大提手	26233431	26233431	26233431	26233431	26233431	26233431	1
12	Valve 3/8"	阀门	07100135	07100135	07100135	07100135			1
	Valve 1/2"	阀门					07100133	07100133	1
13	Valve 1/4"	阀门	07100134	07100134	07100134	07100134	07100134	07100134	1
14	Valve Support	阀门支架	01713425	01713425	01713425	01713425	01713425	01713425	1
15	Right Side Plate Assy	右侧板组件	01302000	01302000	01302000	01302000	01302000	01302000	1
16	Wire Clamp	电线夹	71010103	71010103	71010103	71010103	71010103	71010103	2
17	Insulation Gasket C	绝缘垫片C	70410523	70410523	70410523	70410523	70410523	70410523	1
18	Terminal Board T386A	三位接线板T386A	42011241	42011241	42011241	42011241	42011241	42011241	1
19	Electric Plate	电器盒	01413425	01413425	01413425	01413425	01413425	01413425	1
20	Comp Capacitor 22.5uF/450V	压缩机电容	33000002	33000002	33000002	33000002			1
	Comp Capacitor 25uF/450V						33000020	33000020	1
21	Capacitor clamp	电容夹	02143401	02143401	02143401	02143401	02140001	02140001	1
22	Fan Capacitor 2.5uF/450V	风机电容	33010026	33010026	33010026	33010026			1
	Fan Capacitor 3uF/450V						33010027	33010027	1
23	Terminal Board 2-8	接线板2-8		42011103		42011103		42011103	1
24	Isolation Sheet Assy	隔板组件	01233417	01233417	01233417	01233417	01233417	01233417	1
25	Tube Sensor	管温感温包		39000115		39000115		39000115	1
26	Condenser Assy	冷凝器组件	01103037						1
	Condenser Assy			01103074					1
	Condenser Assy				01103059				1
	Condenser Assy					01103056			1
	Condenser Assy						01103075		1
	Condenser Assy							01103073	1
27	Rear grill	后护网组件	11123402	11123402	11123402	11123402	11123402	11123402	1
28	Top cover	顶盖组件	01253261	01253261	01253261	01253261	01253261	01253261	1
29	Motor Support	电机支架	01703391	01703391	01703391	01703391	01703391	01703391	1
30	Self-tapping Screw	螺钉	10140165	10140165	10140165	10140165	10140165	10140165	4
31	Motor FW25E	风扇电机	15013151	15013151					1
	Motor FW30E				15013153	15013153			1
	Motor FW48A						15013036	15013036	1

The data are subject to change without notice.

Table 1-14

No.	Description	名称及规格	Part No.				Qty
			GSW9-22L/A(0)	GSW9-22R/A(0)	GSW12 -22L/A(0)	GSW12-22R/A(0)	
1	Front Grill	面板格栅	22413008	22413008	22413008	22413008	1
2	Nut M6	螺母 M6	70310131	70310131	70310131	70310131	1
3	Washer 6	垫片 6	70410252	70410252	70410252	70410252	1
4	Axial Flow Fan	轴流风叶	10333412	10333412	10333412	10333412	1
5	Front Plate	面板	01533428	01533428	01533428	01533428	1
6	Metal Base	底盘组件	01203035	01203035	01203035	01203035	1
7	4-way Valve	四通阀		43000312		43000312	1
8	Capillary Assy	毛细管组件	03003018	03003148	03003017	03003041	1
9	Compressor 2P14S236AIJ	压缩机及其配件	00100253	00100253			1
	Compressor 2P19S236AIJ				00100260	00100260	1
10	Nut with Washer M8	带垫螺母	70310014	70310014	70310014	70310014	3
11	Handle	大提手组件	26233431	26233431	26233431	26233431	1
12	Valve 3/8"	阀门 3/8"	07100143	07100143			1
	Valve 1/2"	阀门 1/2"		07100142	07100142		1
13	Valve 1/4"	阀门 1/4"	07100115	07100115	07100115	07100115	1
14	Valve Support	阀门支架	01713425	01713425	01713425	01713425	1
15	Right Side Plate Assy	右侧板组件	01302000	01302000	01302000	01302000	1
16	Wire Clamp	电线夹	71010103	71010103	71010103	71010103	2
17	Insulation Gasket C	绝缘垫片 C	70410523	70410523	70410523	70410523	1
18	Terminal Board T386A	三位接线板 T386A	42011241	42011241	42011241	42011241	1
19	Electric Plate	电器盒	01413425	01413425	01413425	01413425	1
20	Comp Capacitor 30uF/450V	压缩机电容	33000018	33000018	33000018	33000018	1
21	Capacitor clamp	电容夹	02143401	02143401	02143401	02143401	1
22	Fan Capacitor 2.5uF/450V	风机电容	33010019	33010019			1
	Fan Capacitor 3uF/450V				33010021	33010021	1
23	Terminal Board 2-8	接线板 2-8		42011103		42011103	1
24	Isolation Sheet Assy	隔板组件	01233417	01233417	01233417	01233417	1
25	Tube Sensor	管温感温包		39000115		39000115	1
26	Condenser Assy	冷凝器组件	01103005				1
	Condenser Assy			01103204			1
	Condenser Assy				01103004		1
	Condenser Assy					01103206	1
27	Rear grill	后护网组件	11123402	11123402	11123402	11123402	1
28	Top cover	顶盖组件	01253261	01253261	01253261	01253261	1
29	Motor Support	电机支架	01703391	01703391	01703391	01703391	1
30	Self-tapping Screw	螺钉	10140165	10140165	10140165	10140165	4
31	Motor FW25P	风扇电机	15013152	15013152			1
	Motor FW48B				15013305	15013305	1

The data are subject to change without notice.

1.10 Circuit diagram

These circuit diagrams are subject to change.
Please refer to the ones stuck on the machines.

KF-20GW/A12 KF-20GW/NA12 KF-25GW/NA12

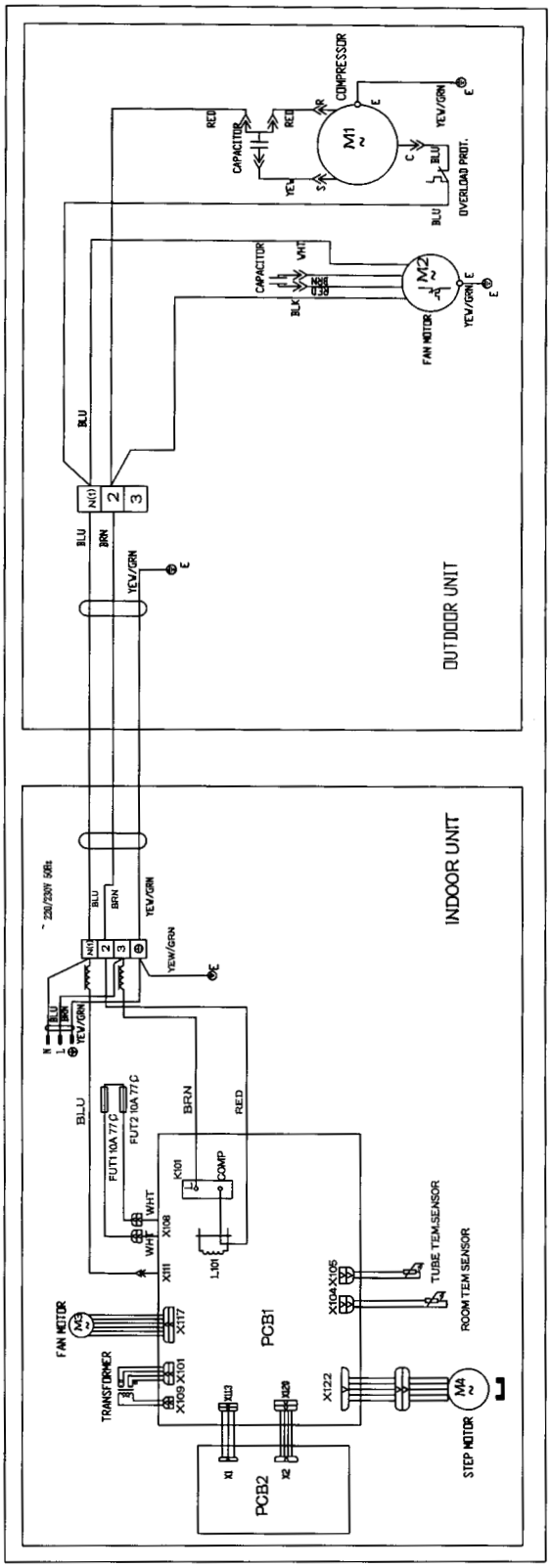

figure 1-9

KFR-20GW/A12 KFR-20GW/NA12 KFR-25GW/NA12

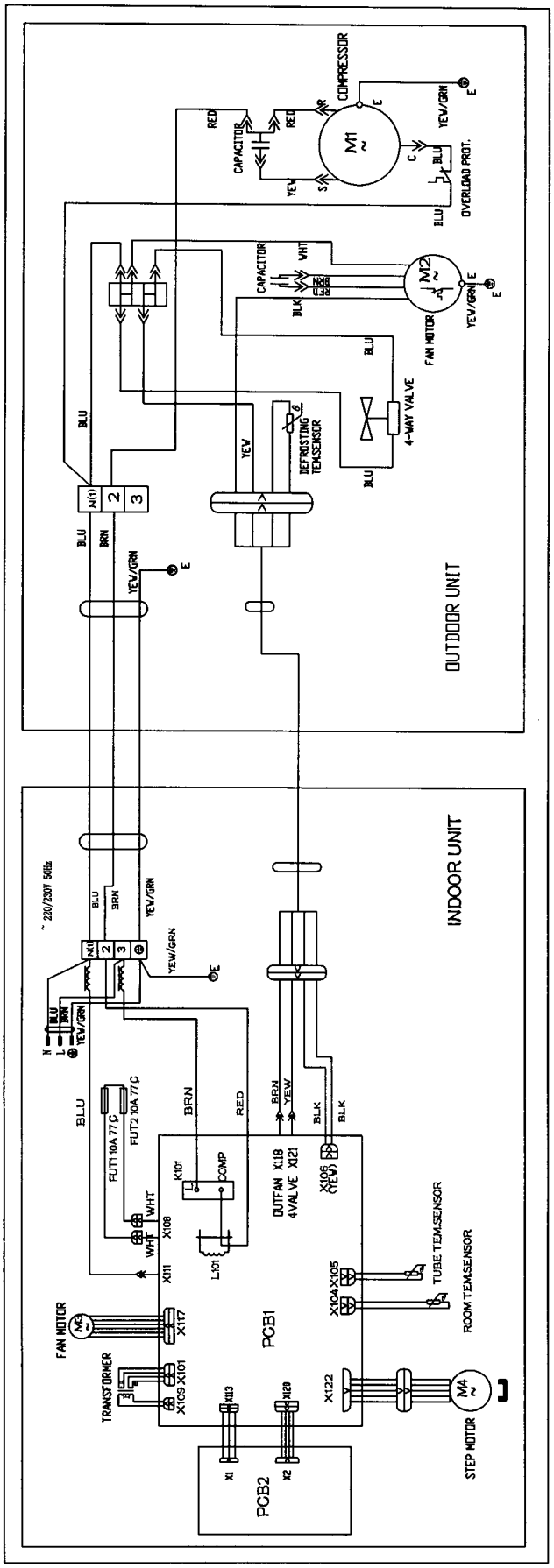

figure 1-10

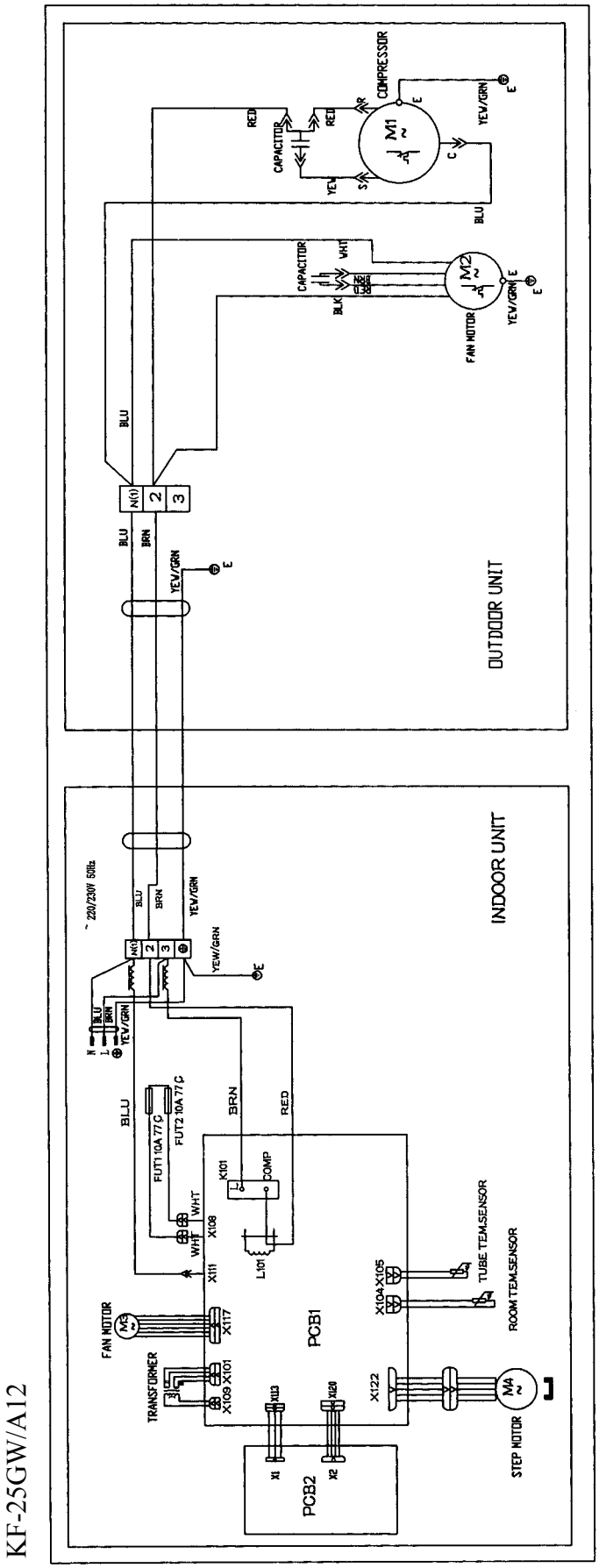

KF-25GW/A12

figure 1-11

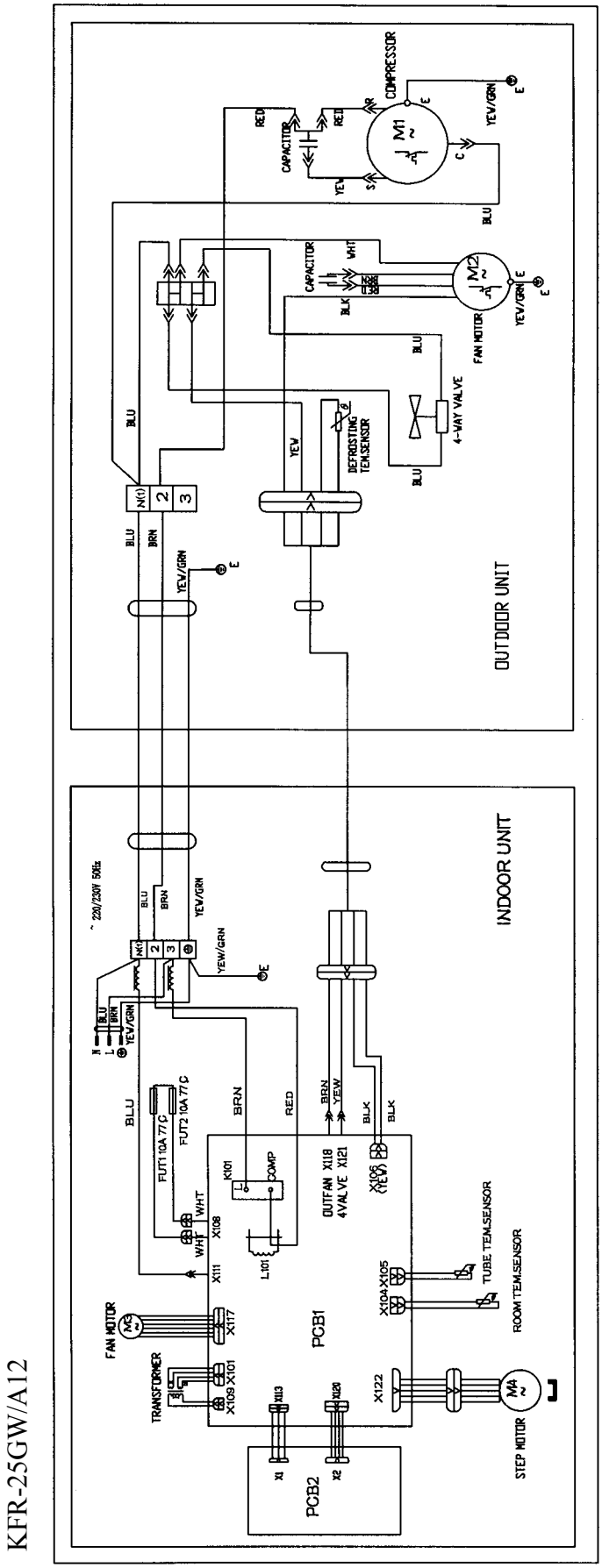

KFR-25GW/A12

figure 1-11

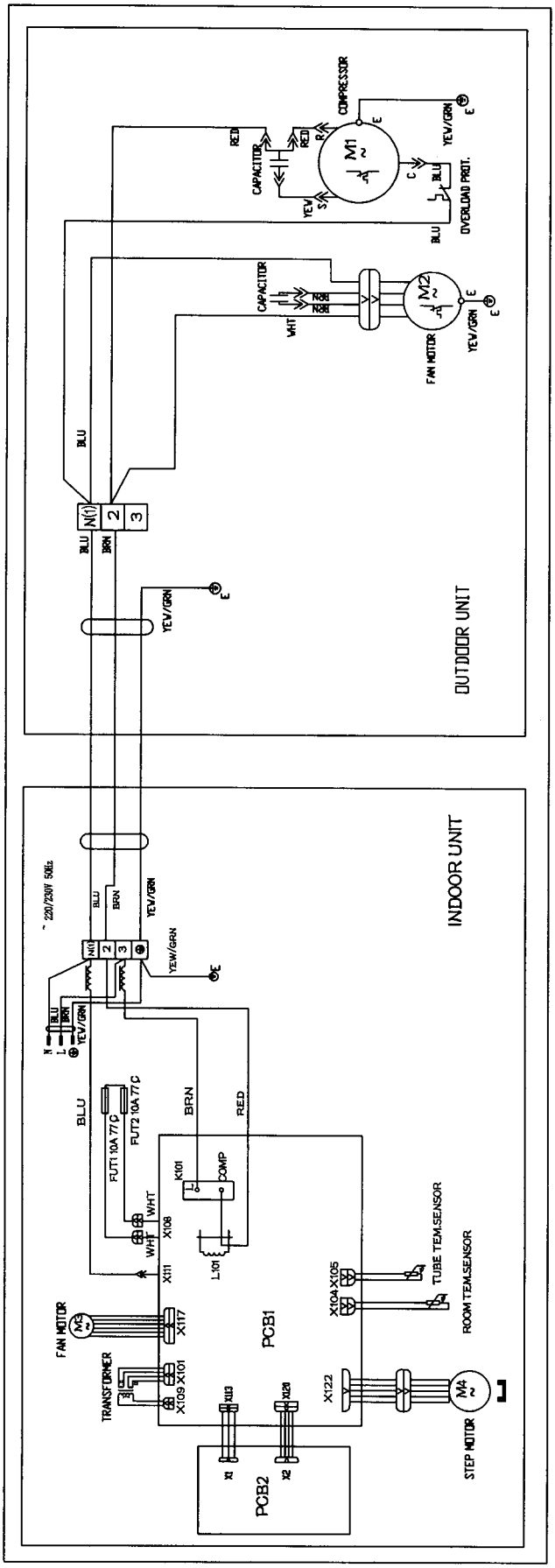

KF-32GW/NA12

figure 1-12

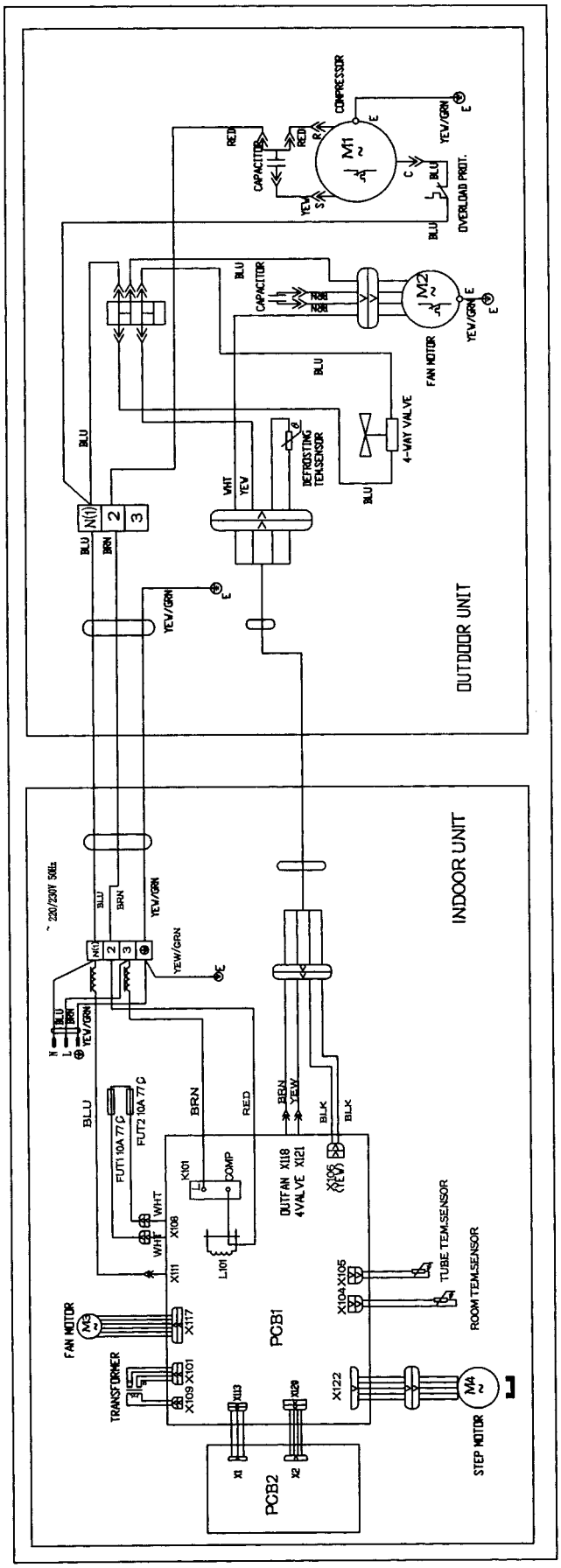

KFR-32GW/NA12

figure 1-13

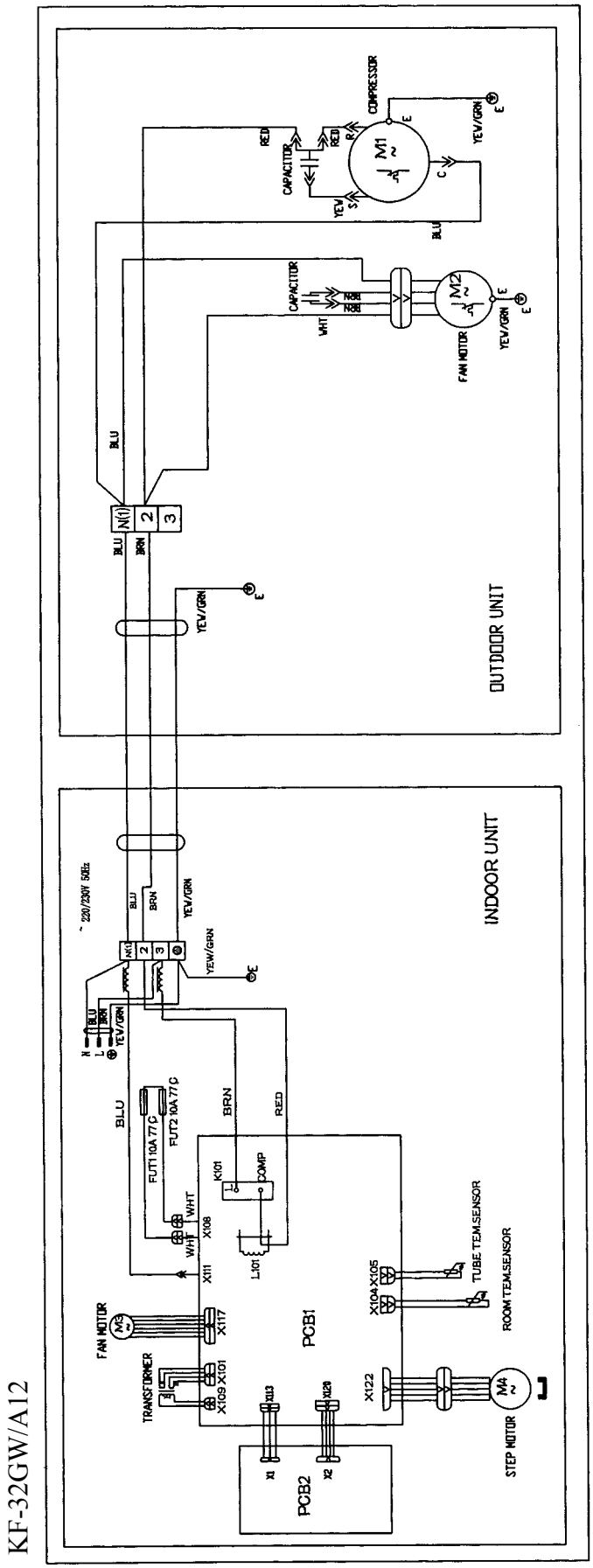
KF-32GW/A12
OUTDOOR UNIT
INDOOR UNIT
COMPRESSOR
CAPACITOR
FAN MOTOR
STEP MOTOR
TRANSFORMER
TUBE TEM.SENSOR
ROOM TEM.SENSOR
PCB1
PCB2
COMP
~ 220/230V 50Hz
BLU
BRN
RED
WHT
YEW/GRN

figure 1-14

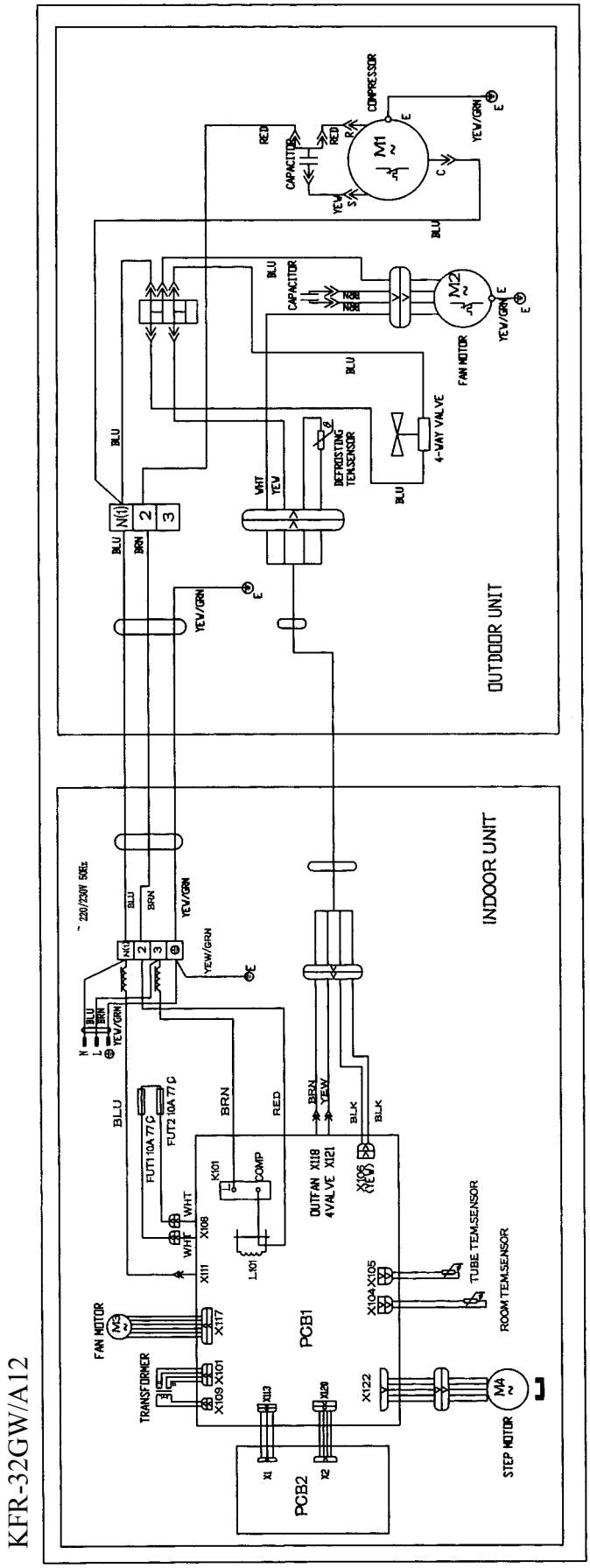
KFR-32GW/A12
OUTDOOR UNIT
INDOOR UNIT
COMPRESSOR
M1
CAPACITOR
RED
YEW
BLU
YEW/GRN
M2
FAN MOTOR
4-WAY VALVE
DEFROSTING TEM.SENSOR
WHT
N(1)
2
3
BRN
~ 220/230V 50Hz
N
L
FUT1 10A 77°C
FUT2 10A 77°C
COMP
X101
L101
X108
X111
X117
X109 X101
TRANSFORMER
PCB1
PCB2
X1
X2
X113
X128
X118
X121
OUT FAN
4VALVE
X106
BLK
X104 X105
TUBE TEM.SENSOR
ROOM TEM.SENSOR
X122
M4
STEP MOTOR

figure 1-15

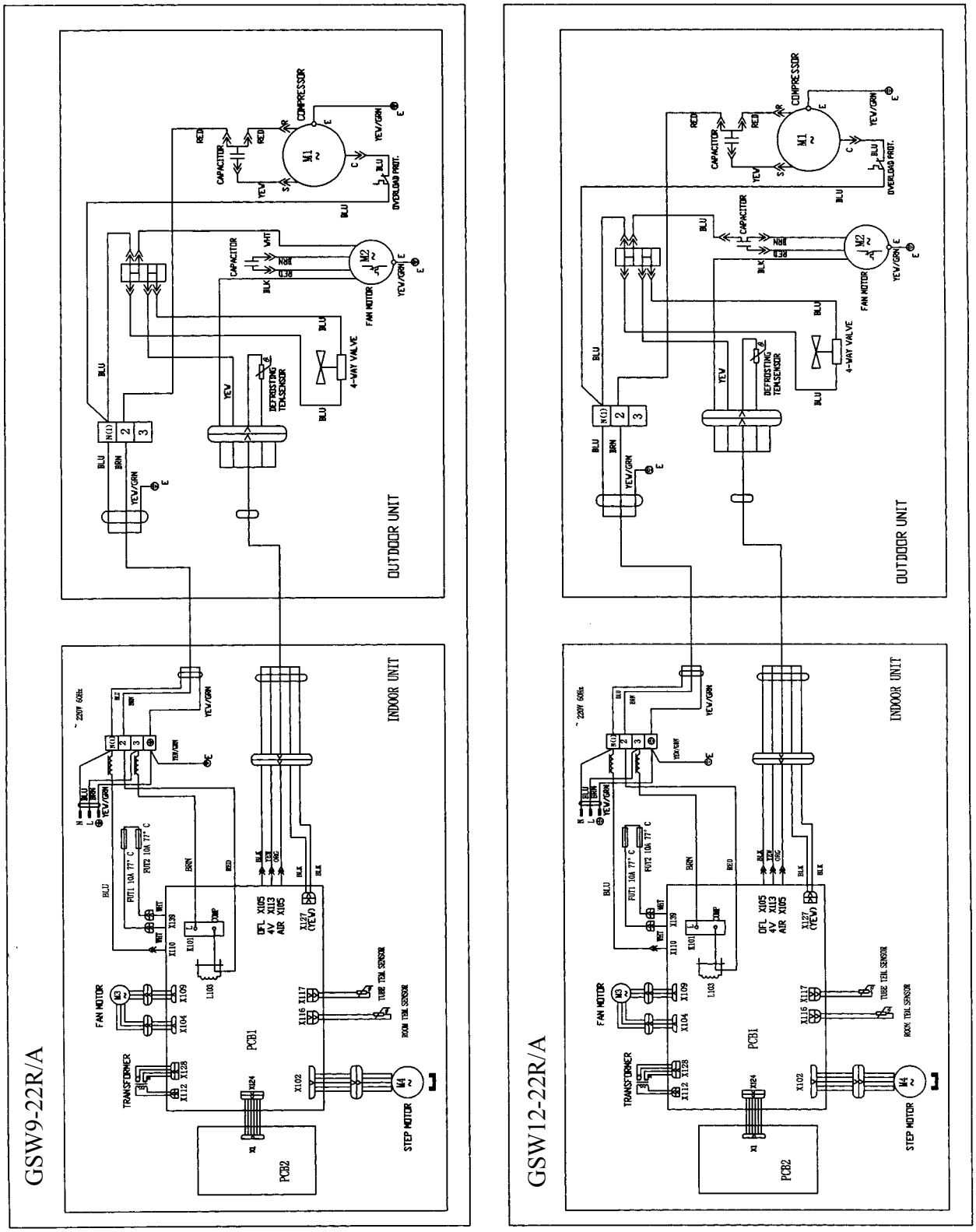
GSW9-22R/A
OUTDOOR UNIT
INDOOR UNIT
COMPRESSOR
CAPACITOR
OVERLOAD PROT.
FAN MOTOR
4-WAY VALVE
DEFROSTING TEMSENSOR
TRANSFORMER
PCB1
PCB2
STEP MOTOR
TUBE TEM.SENSOR
ROOM TEM.SENSOR
GSW12-22R/A
OUTDOOR UNIT
INDOOR UNIT
COMPRESSOR
CAPACITOR
OVERLOAD PROT.
FAN MOTOR
4-WAY VALVE
DEFROSTING TEMSENSOR
TRANSFORMER
PCB1
PCB2
STEP MOTOR
TUBE TEM.SENSOR
ROOM TEM.SENSOR

figure 1-16

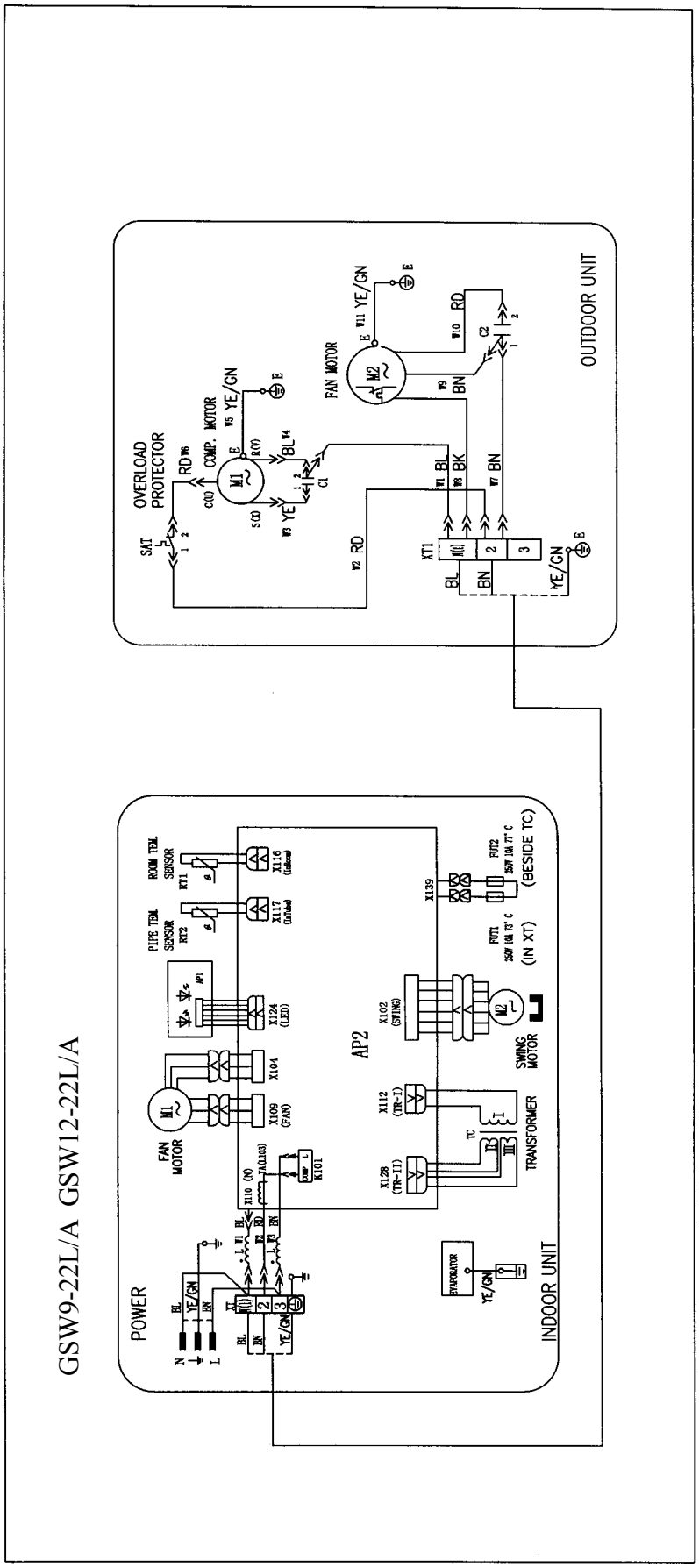
GSW9-22L/A GSW12-22L/A
POWER
INDOOR UNIT
OUTDOOR UNIT
AP2
FAN MOTOR
SWING MOTOR
TRANSFORMER
EVAPORATOR
ROOM TEMP. SENSOR
PIPE TEMP. SENSOR
OVERLOAD PROTECTOR
COMP. MOTOR
FAN MOTOR
(BESIDE TC)
(IN XT)

figure 1-17

1.11 PCB function manual

3 in 1 PCB function manual

KF(R)-20GW/A12 KF(R)-25GW/A12 KF(R)-32GW/A12

KF(R)-20GW/NA12 KF(R)-25GW/NA12 KF(R)-32GW/NA12

A. running mode

1. cooling 2.dehumidifying 3.heating 4. auto

B. input parameters

1. indoor ambient temp. T_{in}
2. evaporator tube temp. T_{eva}
3. setting temp. T_{set}
4. condenser tube temp. T_{con}

C. targets

1. indoor motor (motor)
2. swing motor
3. outdoor motor (single speed motor)
4. compressor
5. four-way reversing valve
6. cooling, dehumidifying indicator; running indicator(for birdline, butterfly series)
7. digital tube setting temp. indicator or timer indicator

D. fundamental functions

1. cooling mode

(1) the running conditions and control measures

a. if $T_{in} \geqslant T_{set}$ + 1℃, the machine runs at the cooling mode. Compressor runs, outdoor motor runs at low speed , indoor fan runs at the set fan speed.

b. if $T_{in} \leqslant T_{set}$ -1℃, the machine stops. Compressor stops first , outdoor motor stops after 15 seconds , indoor motor runs at the set fan speed.

c. if T_{set} -1℃ $< T_{in} <$ T_{set} +1℃,keep the previous state.

(2) in this mode, the reversing valve is inactive, the temp. setting range is from 16~30℃.

(3) Protect function

a. anti-freezing function.

if compressor have run 6 minutes , and detect T_{eva}< 0℃ for continuous 3 minutes, then the compressor , outdoor fan stopped , indoor fan run at the set fan speed. After 3 minutes later, it will run at the original state if $T_{eva} \geqslant$ 10℃.

b. compressor protection

Compressor's starting interval should be more than 3 minutes no matter in whatever modes and conditions. If it's plugged in first time, the compressor does not have 3 minutes delay. When compressor is started, it will not stop within 5 minutes unless it is plugged out.

c. overload protection

If it detect the system current surpass the designed 13 A for continuous 3 minutes, the machine go into fan mode, when 3 minutes passed and it detect the current no more than 13 A, it will back to original state. If it detects overloading states for 6 consecutive times, the machine stops, and must be restarted by remote controller.

2. dehumidifying mode

(1) the working conditions and control measures

a. if $T_{in} > T_{set}+2℃$, it is in cooling running, the indoor motor speed can be selected ,and outdoor motor run at low speed.

b. If $T_{set} -2℃ \leqslant T_{in} \leqslant T_{set}+2℃$,it goes into dehumidifying running ,the indoor motor run at the low speed, 6 minutes later the compressor stops, another 15 seconds later the outdoor fan stops and another 30 seconds later, the indoor motor stops, 3 and a half minutes later, compressor and outdoor fan run again ,indoor motor runs at the low speed, then the machine cycle the above procedures repeatedly. outdoor motor runs at the low speed.

c. If $T_{in} < T_{set} -2℃$, compressor ,outdoor motor and indoor motor stop.

(2) in this mode, the reversing valve is inactive , the temp. setting range is 16~30℃.

(3) Anti-freezing protection.

If $T_{indoor} > T_{set} + 2℃$, it goes into cooling running , anti-freezing function is same with cooling mode, but the compressor must stops for 4 minutes. when it goes into dehumidifying mode, compressor runs 6 minutes , if it detects $T_{eva} < 0℃$,compressor and outdoor motor stop, indoor motor runs at low speed ,after 3 minutes delay ,and $T_{eva} \geqslant 10℃$,it will be back to its original state.

3. heating mode

(1) the working conditions and control measures

a. If $T_{in} \leqslant T_{set}+2℃$, it goes into heating mode, reversing valve, compressor and outdoor motor all work in the same time, indoor fan will run at the same procedures with anti cool air function.

b. If $T_{in} \geqslant T_{set} + 4℃$, compressor stops first, 15 seconds late, outdoor motor stops ,but reversing valve keeps working, indoor motor run at the procedures of blowing surplus heat.

c.if $T_{set} + 2℃ < T_{indoor} < T_{set} +4℃$, keep the previous running state.

(2) in this mode, the temperature setting range is 16~30℃.

(3) The working conditions of auxiliary electric heater.

In heating mode, when compressor is working, indoor motor runs at high speed and middle speed . if it detect $T_{eva}<50℃$ for continuous 8 seconds and $T_{indoor} \leqslant 25℃$, electric heater will work ,if compressor stop or indoor motor runs at low speed or $T_{eva} \geqslant 54℃$ or $T_{indoor} \geqslant 28℃$ or 10 seconds before defrosting , the electric heater will stop.

(4) protections

a .anti cool air

when the machine starts heating and $T_{eva} \geqslant 22℃$, indoor motor runs at low speed, and swing motor makes the louver at the horizontal position(in Bird line, it will swing to the maximum air volume position), if $T_{eva} \geqslant 40℃$ or compressor have run 2 minutes ,indoor motor and swing motor will run at the set speed .

b .anti high temp.

in heating mode, if it detect $T_{eva} \geqslant 56℃$(58℃ can be selected), outdoor motor will stop(in this period it will not detect the defrosting temp.). if $T_{eva} \leqslant 52℃$, outdoor motor will be back running (it will not detect defrosting temp. in the first 5 seconds).

c. blowing surplus heat

In heating mode, when set temp is reached ,comp. stops first,15 seconds later outdoor fan stops, Indoor motor blows 90 seconds (60 seconds can be selected) at low speed ,swing motor makes the louver at the horizontal position(in Bird line,it will swing to the maximum air volume postion).

d. Compressor's protection is same with the one in cooling mode.

e. Overload protection

If it detects that the system current surpassed the designed 13 A for continuous 3 seconds, compressor, electric heater and outdoor motor stop , indoor motor runs the same procedures as the blowing surplus heat condition. After 3 minutes and current no more than 13 A, the machine will be back to its original state, indoor motor runs as the anti cool air condition. If it detects overloading state for 3 consecutive times within 30 minutes, the machine stops, and it must be restarted by remote controller.

f. defrosting conditions and procedures

In heating mode, if compressor has run 44 minutes (in its first 6 minutes it will not detect defrosting temp.) , and it has detected $T_{con} \leqslant -4℃$ for continuous 1 minutes , it begins to defrost , electric heater will stop for 10 seconds (even if electric heater is not working) , then indoor motor stops , reversing valve becomes inactive in another 2 seconds, another 2 seconds later, outdoor motor stops, when $T_{con} \geqslant 10℃$or defrosting lasts for 10 minutes , outdoor motor and reversing valve becomes active , indoor motor will run as the anti cool air condition, then it cycles again, recalculates the compressor's running time again. (In this period , if any protection works ,and after the machine is back to work , it will re-start defrosting state. it will not detect outdoor tube temp when compressor's in its first 6 minutes running)

g. noise eliminated protection

When you use RUN/STOP button to switch off the machine, reversing valve will become inactive in 2 minutes.

4. AUTO mode

(1) in AUTO mode, standard cooling T_{set}=25℃, standard heating T_{set}=20℃

(2) working procedures

a. If $T_{indoor} \geqslant T_{set} + 1℃$, select cooling mode, from this time, the set temp. is 25℃. If Tindoor $\leqslant T_{set}$-1℃, compressor and outdoor motor stop, indoor motor runs at the set speed, if T_{set} -1℃< T_{indoor} <

T_{set} +1℃, keep the original state.

b. If $T_{indoor} \leqslant T_{set}$+2℃, select heating mode, from this time, the set temp. is 20℃, if $T_{indoor} \geqslant T_{set}$ + 4℃, compressor stops first, outdoor motor stops 15 seconds later , reversing valve is always active, indoor motor runs as the blowing surplus heat condition. If T_{set} +2℃< T_{indoor} < T_{set} +4℃, keeps the original state.

Cooling & heating AUTO mode: in AUTO mode, when the machine is switched from heating mode to the other modes, reversing valve becomes inactive in 90 seconds.

Cooling only AUTO mode: there is no heating function in this mode.

(3) protections

It is same as the one in cooling or heating mode.

E. other controls

1. SWING mode

a. When it is active, the louver returns to position O, close the air outlet.

b. When machine works, it turns to the max. Air output position D, then returns back to position L to stand by (position L is the horizontal place mentioned before).

c. In swing state, the louver swings between position L and position D.

d. When the machine is switched off, it is back to position O.

e. When the machine is running and the swing is off, the louver stops at position E.

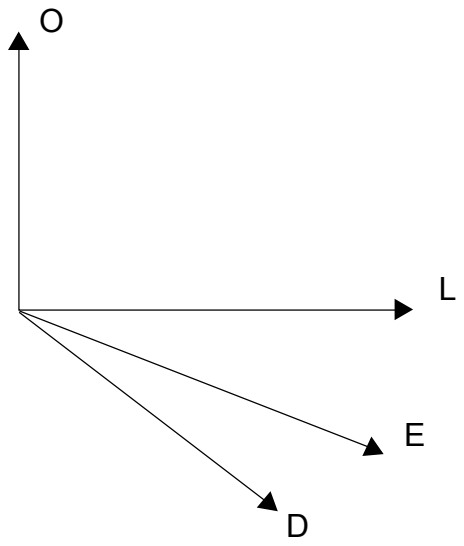

2. beeper

When PCB becomes active or receives the signal from the remote controller , the beeper will beep.

3. indication lamps

it flashes when defrosting begin.

4. press the AUTO button a time, the machine runs in AUTO mode, indoor motor runs in low speed, fresh air function is not active, press again the machine stops.

5. digital tube display(bee, butterfly)

(1) the digital tube displays the setting temperature(the range is16~30℃) when the machine is running

(2) The digital tube displays the setting time(the range is 1~24 hours) for 5 seconds when remote controller sets timer of on/off. Then come back to display the setting time; timer displays "—", it means that timer setting is canceled.

(3) Light button: when remote controller(Y512) sends light signal, the digital tube is lighted for 2~4 seconds then turns off.

6. Fresh air function.

there are two fresh air modes .

a.fresh air 2

fresh air motor will work 1 hour, then rest 1 hour, then cycle again.

b.fresh air 1

press the button AIR on the remote controller to select fresh air 1 function, the swing motor keeps running till you give a signal to change it.

7. Automatic fan speed .

a. in cooling mode, if Tindoor > T_{set} + 5℃	high speed
T_{indoor} ≥T_{set} +3℃	middle speed
T_{indoor} ≥ T_{set} + 1℃	low speed
b. in heating mode, if Tin_{door} ≤Tset - 5℃	high speed
T_{indoor} ≤Tset -3℃	middle speed
T_{indoor} ≤Tset -1℃	low speed
c. in dehumidify mode, if T_{indoor} ≥ T_{set} + 5℃	high speed
T_{indoor} ≥ T_{set} + 2℃	low speed

8. SLEEP mode.

a. in cooling or dehumidifying mode, 1 hour after you set the sleep timer ,T_{set} will add 1℃automatically, another 1 hour, another 1℃ will be added.

b. In heating mode, 1 hour after you pset the sleep timer, T_{set} will lower 1℃automatically, another 1 hour, another 1℃will be lowered .

5 in 1 PCB function manual

(For GSW9-22L/A GSW12-22L/A GSW9-22R/A GSW12-22R/A)

A. running mode

1. cooling 2.dehumidifying 3.heating 4.fan 5.auto

B. input parameters

1. indoor ambient temp. T_{in}
2. evaporator tube temp. T_{eva}
3. setting temp. T_{set}
4. condenser tube temp. T_{con}
5. outdoor ambient temp. T_{out}

C. targets

1. indoor motor (PG motor)
2. swing motor
3. outdoor motor (two speeds motor)
4. compressor
5. four-way reversing valve
6. electric heater
7. fresh motor
8. air cleaner

D. fundamental functions

1. cooling mode

(1) the running conditions and control measures

a. if $T_{in} \geqslant T_{set} + 1$℃, the machine runs at the cooling mode. Compressor runs, outdoor motor runs at low speed , indoor fan runs at the set fan speed.

b. if $T_{in} \leqslant T_{set} - 1$℃, the machine stops. Compressor stops first , outdoor motor stops after 15 seconds , indoor motor runs at the set fan speed.

c. if $T_{set} - 1$℃ $< T_{in} < T_{set} + 1$℃,keep the previous state.

(2) in this mode, the reversing valve is inactive, the temp. setting range is from 16~30℃.

(3) Protect function

a. anti-freezing function.

if compressor have run 6 minutes , and detect $T_{eva} < 0$℃ for continuous 3 minutes, then the compressor , outdoor fan stopped , indoor fan run at the set fan speed. After 3 minutes later, it will run at the original state if $T_{eva} \geqslant 10$℃.

b. compressor protection

Compressor's starting interval should be more than 3 minutes no matter in whatever modes and conditions. If it's plugged in first time, the compressor does not have 3 minutes delay. When com-

pressor is started, it will not stop within 5 minutes unless it is plugged out.

c. overload protection

If it detect the system current surpass the designed 13 A for continuous 3 minutes, the machine go into fan mode, when 3 minutes passed and it detect the current no more than 13 A, it will back to original state. If it detects overloading states for 3 consecutive times within 30 minutes, the machine stops, and must be restarted by remote controller.

d. locked motor protection

if it detects no feedback from the PG motor for continuous 15 seconds , the machine stops, after 3 minutes delay, the machine backs to original state. If the motor be detected locked for 3 consecutive times, the whole machine stops and can not run again automatically.

2. dehumidifying mode

(1) the working conditions and control measures

a. if $T_{in} > T_{set}+2℃$, it is in cooling running, the indoor motor speed can be selected ,and outdoor motor run at low speed.

b. If $T_{set}-2℃ \leqslant T_{in} \leqslant T_{set}+2℃$,it goes into dehumidifying running ,the indoor motor run at the low speed, 6 minutes later the compressor stops, another 15 seconds later the outdoor fan stops and another 30 seconds later, the indoor motor stops, 3 and a half minutes later, compressor and outdoor fan run again ,indoor motor runs at the low speed, then the machine cycle the above procedures repeatedly. outdoor motor runs at the low speed.

c. If $T_{in} < T_{set}-2℃$, compressor ,outdoor motor and indoor motor stop.

(2) in this mode, the reversing valve is inactive , the temp. setting range is 16~30℃.

(3) Anti-freezing protection.

If $T_{indoor} > T_{set} + 2℃$, it goes into cooling running , anti-freezing function is same with cooling mode, but the compressor must stops for 4 minutes. when it goes into dehumidifying mode, compressor runs 6 minutes , if it detects $T_{eva} < 0℃$,compressor and outdoor motor stop, indoor motor runs at low speed ,after 3 minutes delay ,and $T_{eva} \geqslant 10℃$,it will be back to its original state.

(4) Overload is same as the one in cooling mode.

3. heating mode

(1) the working conditions and control measures

a. If $T_{in} \leqslant T_{set}+2℃$, it goes into heating mode, reversing valve, compressor and outdoor motor all work in the same time, indoor fan will run at the same procedures with anti cool air function.

b. If $T_{in} \geqslant T_{set} + 4℃$, compressor stops first, 15 seconds late, outdoor motor stops ,but reversing valve keeps working, indoor motor run at the procedures of blowing surplus heat.

d. if $T_{set} + 2℃ < T_{indoor} < T_{set} +4℃$, keep the previous running state.

e. If $T_{outdoor} \leqslant 3℃$, outdoor runs at high speed, if $T_{outdoor} \geqslant 5℃$,outdoor motor runs at low speed .if $3℃ \leqslant T_{outdoor} \leqslant 5℃$,keep the previous running state.

(2) in this mode, the temperature setting range is from 16~30℃.

(3) The working conditions of auxiliary electric heater.

In heating mode, when compressor is working, indoor motor runs at high speed and middle speed . if it detect T_{eva}<50℃ for continuous 8 seconds and T_{indoor} ≤25℃, electric heater will work ,if compressor stop or indoor motor runs at low speed or T_{eva} ≥ 54℃or T_{indoor} ≥ 28℃ or 10 seconds before defrosting , the electric heater will stop.

(4) protections

a .anti cool air

when the machine starts heating and T_{eva} ≥ 22℃, indoor motor runs at low speed, and swing motor makes the louver at the horizontal position(in Bird line, it will swing to the maximum air volume position), if T_{eva}≥ 40℃ or compressor have run 2 minutes ,indoor motor and swing motor will run at the set speed .

b .anti high temp.

in heating mode, if it detect T_{eva} ≥ 56℃(58℃ can be selected), outdoor motor will stop(in this period it will not detect the defrosting temp.). if T_{eva}≤52℃, outdoor motor will be back running (it will not detect defrosting temp. in the first 5 seconds).

c. blowing surplus heat

In heating mode, when set temp is reached ,comp. stops first,15 seconds later outdoor fan stops, Indoor motor blows 90 seconds (60 seconds can be selected) at low speed ,swing motor makes the louver at the horizontal position(in Bird line,it will swing to the maximum air volume postion).

d. Compressor's protection is same with the one in cooling mode.

e. Overload protection

If it detects that the system current surpassed the designed 13 A for continuous 3 seconds, compressor, electric heater and outdoor motor stop , indoor motor runs the same procedures as the blowing surplus heat condition. After 3 minutes and current no more than 13 A, the machine will be back to its original state, indoor motor runs as the anti cool air condition. If it detects overloading state for 3 consecutive times within 30 minutes, the machine stops, and it must be restarted by remote controller.

f. locked motor protection

if it detects no feedback from the PG motor for continuous 15 seconds , compressor , outdoor motor, indoor motor and electric heater will stop, 3 minutes late, the machine will be back to its original state, indoor motor runs as the anti cool air condition. If the motor was locked for 3 consecutive times, the whole machine stops and can not run again automatically.

g. defrosting conditions and procedures

In heating mode, if compressor has run 44 minutes (in its first 6 minutes it will not detect defrosting temp.) , and it has detected T_{con}≤-4℃ for continuous 1 minutes , it begins to defrost , electric heater will stop for 10 seconds (even if electric heater is not working) , then indoor motor stops , reversing valve becomes inactive in another 2 seconds, another 2 seconds later, outdoor motor stops, when T_{con}≥ 10℃or defrosting lasts for 10 minutes , outdoor motor and reversing valve becomes active , indoor motor will run as the anti cool air condition, then it cycles again, recalculates the compressor's running time again. (In this period , if any protection works ,and after the

machine is back to work , it will re-start defrosting state. it will not detect outdoor tube temp when compressor's in its first 6 minutes running)

h.noise lowering protection

When you use RUN/STOP button to switch off the machine, reversing valve will become inactive in 2 minutes.

4. AUTO mode

(1) in AUTO mode, standard cooling T_{set}=25℃, standard heating T_{set}=20℃

(2) working procedures

a. If $T_{indoor} \geqslant T_{set}$ + 1℃, select cooling mode, from this time, the set temp. is 25℃. If $T_{indoor} \leqslant T_{set}$-1℃, compressor and outdoor motor stop, indoor motor runs at the set speed, if T_{set}-1℃< T_{indoor} < T_{set} +1℃, keep the original state.

b. If $T_{indoor} \leqslant T_{set}$+2℃, select heating mode, from this time, the set temp. is 20℃, if $T_{indoor} \geqslant T_{set}$ + 4℃, compressor stops first, outdoor motor stops 15 seconds later , reversing valve is always active, indoor motor runs as the blowing surplus heat condition. If T_{set} +2℃< T_{indoor} < T_{set} +4℃, keeps the original state.

Cooling & heating AUTO mode: in AUTO mode, when the machine is switched from heating mode to the other modes, reversing valve becomes inactive in 90 seconds.

Cooling only AUTO mode: there is no heating function in this mode.

(3) protections

It is same as the one in cooling or heating mode, there is only one exception , the compressor doesn't have at least 5 minutes protection.

E. other controls

1. SWING mode

a. When it is active, the louver returns to position O, close the air outlet.

b. When machine works, it turns to the max. Air output position D, then returns back to position L to stand by (position L is the horizontal place mentioned before).

c. In swing state, the louver swings between position L and position D.

d. When the machine is switched off, it is back to position O.

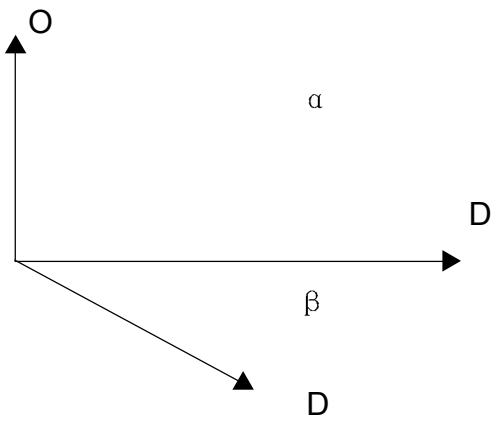

In Gree 2000 line and new 24000BTU line , α =93, β =45
In Bird line, α =80, β =25
Attention : in Bird line, the louver will stop at position D . in other lines, the louver will stop at position L)

Bird line:
a. When it is active, the louver returns to position O, close the air outlet.
b. When machine works, it turns 80 degrees to the max. Air output position D and stands by.
c. In swing state, the louver swings between position L(25) and position D.
d. When the machine is switched off, it is back to position O.

2. beeper
a. When PCB becomes active or receives the signal from the remote controller , the beeper will beep.
b. If thermostat is open-circuited or short-circuited, when you press the TEST button, the beeper will alarm at the frequency 2HZ.
3. indication lamps
it flashes when defrosting begin.
4. multi-step switch .
a. If the switch is in AUTO position, the machine will run at the AUTO mode, if there is a signal from remote controller, it will run according to the signal .
b. If the switch is in TEST position, the machine will run at the COOL mode, indoor motor will run at high speed , swing motor will run according to SWING mode. If there is a signal from remote controller, it will run according to the signal .if the thermostat is open-circuited or short-circuited , the beeper will alarm at the frequency 2 HZ .
c. If the switch is in RUN position , the machine will run according to the remote signal.
d. If the switch is in STOP position, the machine will stop.
5. SLEEP mode.
a. In cooling or dehumidifying mode, 1 hour after you set the sleep timer ,T_{set} will add 1℃automatically, another 1 hour, another 1℃ will be added.
b. In heating mode, 1 hour after you set the sleep timer, T_{set} will lower 1℃automatically, another 1 hour, another 1℃will be lowered .
6. Automatic fan speed .
a. In cooling mode, if $T_{indoor} > T_{set} + 4$℃ high speed
$T_{set} + 2$℃$\leqslant T_{indoor} \leqslant T_{set} + 4$℃ middle speed
$T_{indoor} < T_{set} + 2$℃ low speed

b. b. In heating mode, if $T_{indoor} \leqslant T_{set} - 1$℃ high speed
$T_{set} - 1$℃$< T_{indoor} < T_{set} + 1$℃ middle speed

$T_{indoor} \geqslant T_{set} + 2℃$ low speed

F. Fresh air function.

1.there are two fresh air modes .

a.fresh air 2

fresh air motor will work 1 hour, then rest 1 hour, then cycle again.

b.fresh air 1

press the button AIR on the remote controller to select fresh air 1 function, the swing motor keeps running till you give a signal to change it.

G. air cleaning

In air cleaning mode, air cleaner works while indoor fan runs and air cleaner stops while indoor fan stops.

The speeds of the wind of all types of the air-conditioner are as below:

000: 900,850, 800, 700 (RPM);

001: 1000, 900, 850, 700(RPM);

010: 1050, 950, 900, 700(RPM);

011: 1100, 1000, 950, 700(RPM);

100: 1200, 1100, 1000, 700(RPM);

101: 1250, 1100, 1050, 700(RPM);

111: 1400, 1200, 1100, 700(RPM);

2.GREE2000 Series

2.1 Summary.

figure 2-1

MODEL		NOTE
KF-20GW/J(2035M)	KFR-20GW/J(2045M)	CE STANDARD
KF-25GW/J(2535M)	KFR-25GW/J(2545M)	1Ph 220-230V~50Hz
KF-35GW/J(3535M)	KFR-35GW/J(3545M)	R22
KF-45GW/J(4535M)	KFR-45GW/J(4545M)	LED OR LCD DISPLAY

GSW18-22L/A	GSW18-22R/A	1Ph 220V~60Hz R22 LED DISPLAY ONLY

figure 2-2

MODEL	NOTE
KF-45GW/JN(4535M) KFR-45GW/JN(4545M)	CE STANDARD 1Ph 220-230V~50Hz R407C LCD DISPLAY
KT3F-45GW/J1-12205 KT3FR-45GW/J1-12205	TROPICAL AIR-CONDITIONER 1Ph 220V~50Hz R22 LCD DISPLAY
KT3F-45GW/J1 KT3FR-45GW/J1	TROPICAL AIR-CONDITIONER 1Ph 220V~60Hz R22 LCD DISPLAY

2.2 Technical specifications.

Table 2-1

Model			KF-20GW/J (2035M)	KFR-20GW/J(2045M)	
Function			Cooling	Cooling	Heating
Power supply			1Ph 220-230V~50Hz		
Capacity	W		2000	2000	2300
	(BTU/h)		6826	6826	
Rated input(W)			760	760	
Rated current(A)			3.3		
Air flow(m^3/h)			420		
Dehumidifying volume(L/h)			0.8		
EER(W/W)			3.0		
Indoor unit	Model		KF-20G/(2035M)	KFR-20G/(2045M)	
	Motor fan speed(rpm)		850/800/750		
	Output power(W)		8		
	Fan type/piece		Cross flow fan-1		
	Diameter-length(mm)		ϕ 91mm-616		
	Evaporator		Aluminum fin-copper tube		
	Row-fin distance(mm)		2-1.5		
	Working area(m^2)		0.18		
	Swing motor		MP24GA		
	Input power(W)		2		
	Fuse(A)		Controller 3.15A Transformer 0.2A		
	Working capacitor(μF)		1		
	Noise(dB(A))		⩽ 34		
	Dimension(width-height-depth)(mm)		830 × 285 × 189		
	Net weight(kg)		11		
Outdoor unit	Model		KF-20W/J	KFR-20W/J	
	Input power(W)		729	729/789	
	Current(A)		3.06	3.06/3.16	
	L.R.A.(A)		15		
	Throttling method		Capillary		
	Compressor		SG333DB1	SG433EB2	
	Starting method		Capacitor staring		
	Working temp.		⩽ 115℃		
	Condenser		Aluminum fin-copper tube		
	Pipe-diameter		9.52		
	Row-fin distance(mm)		2-1.4		
	Working area(m^2)		0.65		
	Fan motor power(w)/speed(rpm)		38/720		
	Type-piece		Axial fan-1		
	Diameter(mm)		400		
	Defrosting method		Auto defrost		
	Noise (dB(A))		52		
	Dimension(width-height-depth)(mm)		848–540–320		
	Net weight(kg)		32		
	Refrigerant charge (kg)		R22/0.7kg	R22/0.8kg	
Connecting pipe	Length (m)		4		
	Outer diameter of connecting pipe	Liquid pipe(mm)	6(1/4”)		
		Gas pipe(mm)	9.52(3/8”)		
	Max distance	Height(m)	5		
		Length(m)	10		

The technical date are subject to change without notice .Please refer to the nameplate of the unit.

Table 2-2

Model			KF-25GW/J (2535M)	KFR-25GW/J(2545M)	
Function			Cooling	Cooling	Heating
Power supply			1Ph 220-230V~50Hz		
Capacity	W		2500	2500	2800
	(BTU/h)		8534	8534	9500
Rated input(W)			920	920	950
Rated current(A)			4.4	4.4	4.5
Air flow(m^3/h)			420		
Dehumidifying volume(L/h)			1.2	1.2	/
EER(W/W)			2.8	2.8	3.1
Indoor unit	Model		KF-25G/(2535M)	KFR-25G/(2545M)	
	Motor fan speed(rpm)		900/850/800		
	Output power(W)		8		
	Fan type/piece		Cross flow fan-1		
	Diameter-length(mm)		ϕ 91mm-616		
	Evaporator		Aluminum fin-copper tube		
	Row-fin distance(mm)		2-1.5		
	Working area(m^2)		0.18		
	Swing motor		FN8E-PG		
	Input power(W)		2		
	Fuse(A)		Controller 3.15A Transformer 0.2A		
	Working capacitor(μF)		1		
	Noise(dB(A))		⩽ 34		
	Dimension(width-height-depth)(mm)		830 × 285 × 189		
	Net weight(kg)		11		
Outdoor unit	Model		KF-25W/J	KFR-25W/J	
	Input power(W)		919	919/949	
	Current(A)		4.26	4.26/4.36	
	L.R.A.(A)		21		
	Throttling method		Capillary		
	Compressor		RH165VHAC	RH174VHAC	
	Starting method		Capacitor staring		
	Working temp.		⩽ 115℃		
	Condenser		Aluminum fin-copper tube		
	Pipe-diameter		9.52		
	Row-fin distance(mm)		2-2.0		
	Working area(m^2)		0.65		
	Fan motor power(w)/speed(rpm)		38/720		
	Type-piece		Axial fan-1		
	Diameter(mm)		400		
	Defrosting method		Auto defrost		
	Noise (dB(A))		56		
	Dimension(width-height-depth)(mm)		848–540–320		
	Net weight(kg)		32		
	Refrigerant charge (kg)		R22/0.7kg	R22/0.9kg	
Connecting pipe	Length (m)		4		
	Outer diameter of connecting pipe	Liquid pipe(mm)	6(1/4")		
		Gas pipe(mm)	9.52(3/8")		
	Max distance	Height(m)	5		
		Length(m)	10		

The technical date are subject to change without notice .Please refer to the nameplate of the unit.

Table 2-3

Model			KF-35GW/J (3535M)	KFR-35GW/J(3545M)	
Function			Cooling	Cooling	Heating
Power supply			1Ph 220-230V~50Hz		
Capacity	W		3500	3500	3800
	(BTU/h)		11945	11945	12975
Rated input(W)			1300	1300	1300
Rated current(A)			6.0	6.0	6.0
Air flow(m^3/h)			500		
Dehumidifying volume(L/h)			1.6	1.6	/
EER(W/W)			2.7	2.7	3.0
Indoor unit	Model		KF-35G/(3535M)	KFR-35G/(3545M)	
	Motor fan speed(rpm)		1050/1000/950		
	Output power(W)		8		
	Fan type/piece		Cross flow fan-1		
	Diameter-length(mm)		ϕ 91mm-616		
	Evaporator		Aluminum fin-copper tube		
	Row-fin distance(mm)		2-1.5		
	Working area(m^2)		0.18		
	Swing motor		MP24GA		
	Input power(W)		2		
	Fuse(A)		Controller 3.15A Transformer 0.2A		
	Working capacitor(μF)		1		
	Noise(dB(A))		⩽ 36		
	Dimension(width-height-depth)(mm)		830 × 285 × 189		
	Net weight(kg)		11		
Outdoor unit	Model		KF-35W/J	KFR-35W/J	
	Input power(W)		1249	1249	
	Current(A)		5.7	5.7	
	L.R.A.(A)		31		
	Throttling method		Capillary		
	Compressor		C-RV222H1AA	C-R110H5H	
	Starting method		Capacitor staring		
	Working temp.		⩽ 115℃		
	Condenser		Aluminum fin-copper tube		
	Pipe-diameter		9.52		
	Row-fin distance(mm)		2-1.4		
	Working area(m^2)		0.65		
	Fan motor power(w)/speed(rpm)		38/720		
	Type-piece		Axial fan-1		
	Diameter(mm)		400		
	Defrosting method		Auto defrost		
	Noise (dB(A))		56		
	Dimension(width-height-depth)(mm)		848–540–320		
	Net weight(kg)		40		
	Refrigerant charge (kg)		R22/1.2kg	R22/1.3kg	
Connecting pipe	Length (m)		4		
	Outer diameter of connecting pipe	Liquid pipe(mm)	6(1/4”)		
		Gas pipe(mm)	12(1/2”)		
	Max distance	Height(m)	5		
		Length(m)	10		

The technical date are subject to change without notice .Please refer to the nameplate of the unit.

Table 2-4

Model			KF-45GW/J (4535M)	KFR-45GW/J1(4545M)	
Function			Cooling	Cooling	Heating
Power supply			1Ph 220-230V~50Hz		
Capacity	W		4500	4500	4900
	(BTU/h)		15500	15500	16500
Rated input(W)			1700	1700	1750
Rated current(A)			7.73	7.73	7.73
Air flow(m^3/h)			650		
Dehumidifying volume(L/h)			2.0	2.0	---
EER(W/W)			2.6	2.6	2.7
Indoor unit	Model		KF-45G/(4535M)	KFR-45G/(4545M)	
	Motor fan speed(rpm)		1250/1150/1050		
	Output power(W)		20		
	Fan type/piece		Cross flow fan-1		
	Diameter-length(mm)		ϕ 91mm-616		
	Evaporator		Aluminum fin-copper tube		
	Row-fin distance(mm)		2-1.4		
	Working area(m^2)		0.18		
	Swing motor		MP24GA		
	Input power(W)		2		
	Fuse(A)		Controller 3.15A Transformer 0.2A		
	Working capacitor(μF)		1		
	Noise(dB(A))		⩽ 46		
	Dimension(width-height-depth)(mm)		830 × 285 × 189		
	Net weight(kg)		11		
Outdoor unit	Model		KF-45W/J	KFR-45W/J	
	Input power(W)		1669	1669/1700	
	Current(A)		7.6	7.6/7.7	
	L.R.A.(A)		35		
	Throttling method		Capillary		
	Compressor		PH290 × 2C-4FT1	PH290 × 2C-4FT1	
	Starting method		Capacitor staring		
	Working temp.		⩽ 115℃		
	Condenser		Aluminum fin-copper tube		
	Pipe-diameter		9.52		
	Row-fin distance(mm)		2-1.4		
	Working area(m^2)		0.4		
	Fan motor power(w)/speed(rpm)		36/880		
	Type-piece		Axial fan-1		
	Diameter(mm)		400		
	Defrosting method		Auto defrost		
	Noise (dB(A))		57		
	Dimension(width-height-depth)(mm)		848–540–320		
	Net weight(kg)		40		
	Refrigerant charge (kg)		R22/1.3kg	R22/1.3kg	
Connecting pipe	Length (m)		4		
	Outer diameter of connecting pipe	Liquid pipe(mm)	6(1/4”)		
		Gas pipe(mm)	12(1/2”)		
	Max distance	Height(m)	5		
		Length(m)	10		

The technical date are subject to change without notice .Please refer to the nameplate of the unit.

Table 2-5

Model			GSW18-22L/A	GSW18-22R/A	
Function			Cooling	Cooling	Heating
Power supply			1Ph 220V 60Hz		
Capacity	W		4500	4500	4900
	(BTU/h)		15500	15500	16500
Rated input(W)			1700	1700	1750
Rated current(A)			7.73	7.73	7.73
Air flow(m^3/h)			650		
Dehumidifying volume(L/h)			2.0	2.0	---
EER(W/W)			2.6	2.6	2.7
Indoor unit	Model		GSW18-22L/A(I)	GSW18-22R/A(I)	
	Motor fan speed(rpm)		1250/1150/1050		
	Output power(W)		20		
	Fan type/piece		Cross flow fan-1		
	Diameter-length(mm)		ϕ 91mm-616		
	Evaporator		Aluminum fin-copper tube		
	Row-fin distance(mm)		2-1.4		
	Working area(m^2)		0.18		
	Swing motor		MP24GA		
	Input power(W)		2		
	Fuse(A)		Controllor 3.15A Transformer 0.2A		
	Working capacitor(μF)		1		
	Noise(dB(A))		⩽ 44		
	Dimension(width-height-depth)(mm)		830 × 285 × 189		
	Net weight(kg)		11		
Outdoor unit	Model		GSW18-22L/A(O)	GSW18-22R/A(O)	
	Input power(W)		1669	1669/1700	
	Current(A)		7.6	7.6/7.7	
	L.R.A.(A)		35		
	Throttling method		Capillary		
	Compressor		2K25S236AHA	2K25S236AHA	
	Starting method		Capacitor staring		
	Working temp.		⩽ 115℃		
	Condenser		Aluminum fin-copper tube		
	Pipe-diameter		9.52		
	Row-fin distance(mm)		2-1.6		
	Working area(m^2)		0.4		
	Fan motor power(w)/speed(rpm)		48/880		
	Type-piece		Axial fan-1		
	Diameter(mm)		400		
	Defrosting method		Auto defrost		
	Noise dB(A)		<57		
	Dimension(width-height-depth)(mm)		848–540–320		
	Net weight(kg)		40		
	Refrigerant charge (kg)		R22/1.2	R22/1.2	
Connecting pipe	Length (m)		4		
	Outer diameter of connecting pipe	Liquid pipe(mm)	6(1/4”)		
		Gas pipe(mm)	12(1/2”)		
	Max distance	Height(m)	5		
		Length(m)	10		

The technical date are subject to change without notice .Please refer to the nameplate of the unit.

Table 2-6

Model			KF-45GW/JN (4535M)	KFR-45GW/JW(4545M)	
Function			Cooling	Cooling	Heating
Power supply			1Ph 220-230V~50Hz		
Capacity		(W)	4500	4500	5200
Rated input(W)			1880	1880	1980
Rated current(A)			9.2	9.2	9.3
Air flow(m^3/h)			650		
Dehumidifying volume(L/h)			2.0	2.0	---
EER(W/W)			2.14	2.14	2.17
Indoor unit	Model		KFR-45G/(4535M)N	KFR-45G/(4545M)N	
	Motor fan speed(rpm)		1250/1150/1050		
	Output power(W)		20		
	Fan type/piece		Cross flow fan-1		
	Diameter-length(mm)		ϕ 91mm-616		
	Evaporator		Aluminum fin-copper tube		
	Row-fin distance(mm)		2-1.4		
	Working area(m^2)		0.18		
	Swing motor		MP24GA		
	Input power(W)		2		
	Fuse(A)		Controller 3.15A Transformer 0.2A		
	Working capacitor(μF)		1		
	Noise(dB(A))		⩽ 46		
	Dimension(width-height-depth)mm		830 × 285 × 189		
	Net weight(kg)		11		
Outdoor unit	Model		KF-45W/JN	KFR-45W/JN	
	Input power(W)		1830	1830/1930	
	Current(A)		8.3	8.3/8.7	
	L.R.A.(A)		35		
	Throttling method		Capillary		
	Compressor		SANYOC-2RN150H5V	SANYO C-2RN150H5V	
	Starting method		Capacitor staring		
	Working temp.		⩽ 115℃		
	Condenser		Aluminum fin-copper tube		
	Pipe-diameter		9.52		
	Row-fin distance(mm)		2-1.7		
	Working area(m^2)		0.4		
	Fan motor power(w)/speed(rpm)		60/780		
	Type-piece		Axial fan-1		
	Diameter(mm)		460		
	Defrosting method		Auto defrost		
	Noise dB(A)		<58		
	Dimension(mm)(width-height-depth)		950 × 710 × 410		
	Net weight(kg)		59		
	Refrigerant charge (kg)		R407C/1.5kg	R407C/1.5kg	
Connecting pipe	Length(m)		4		
	Outer diameter of connecting pipe	Liquid pipe(mm)	6(1/4")		
		Gas pipe(mm)	12(1/2")		
	Max distance	Height(m)	5		
		Length(m)	10		

The technical date are subject to change without notice .Please refer to the nameplate of the unit.

Table 2-7

Model			KT3F-45GW/J1	KT3FR-45GW/J1	
Function			Cooling	Cooling	Heating
Power supply			1Ph 220V 50Hz		
Capacity		(W)	4500	4500	5100
Rated input(W)			2000	2000	2300
Rated current(A)			9.5	9.5	11.0
Air flow(m^3/h)			650		
Dehumidifying volume(L/h)			2.0	2.0	---
EER(W/W)			2.25	2.25	2.22
Indoor unit	Model		KT3F-45G/J1	KT3FR-45G/J1	
	Motor fan speed(r/min)		1350/1250/1150		
	Output power(W)		34		
	Fan type/piece		Cross flow fan-1		
	Diameter-length(mm)		ϕ 91mm-616		
	Evaporator		Aluminum fin-copper tube		
	Row-fin distance(mm)		2-1.5		
	Working area(m^2)		0.18		
	Swing motor		MP24GA		
	Input power(W)		2		
	Fuse(A)		Controller 3.15A Transformer 0.2A		
	Working capacitor(μF)		1		
	Noise(dB(A))		⩽ 44		
	Dimension(width-height-depth)mm		830 × 285 × 189		
	Net weight(kg)		11		
Outdoor unit	Model		KT3F-45W/J1	KT3FR-45W/J1	
	Input power(W)		1950	1950/2250	
	Current(A)		8.9	8.9/10.2	
	L.R.A.(A)		35		
	Throttling method		Capillary		
	Compressor		C118KQ-PFV-240 FW COPLAND	C118KQ-PFV-240FW COPLAND	
	Starting method		Capacitor staring		
	Working temp.		⩽ 115℃		
	Condenser		Aluminum fin-copper tube		
	Pipe-diameter		9.52		
	Row-fin distance(mm)		2-1.7		
	Working area(m^2)		0.4		
	Fan motor power(w)/speed(rpm)		60/780		
	Type-piece		Axial fan-1		
	Diameter(mm)		460		
	Defrosting method		Auto defrost		
	Noise dB(A)		<58		
	Dimension(mm)(width-height-depth)		950 × 710 × 410		
	Net weight(kg)		59		
	Refrigerant charge (kg)		R22/1.4kg	R22/1.4kg	
Connecting pipe	Length		4		
	Outer diameter of connecting pipe	Liquid pipe(mm)	6(1/4")		
		Gas pipe(mm)	12(1/2")		
	Max distance	Height(m)	5		
		Length(m)	10		

The technical date are subject to change without notice .Please refer to the nameplate of the unit.

Table 2-8

Model			KT3F-45GW/J1	KT3FR-45GW/J1	
Function			Cooling	Cooling	Heating
Power supply			1Ph 220V~60Hz		
Capacity		(W)	4500	4500	5200
Rated input(W)			2100	2100	2400
Rated current(A)			9.5	9.5	11.0
Air flow(m^3/h)			650		
Dehumidifying volume(L/h)			2.0	2.0	---
EER(W/W)			2.14	2.14	2.17
Indoor unit	Model		KT3F-45G/J1-12205	KT3FR-45G/J1-12205	
	Motor fan speed(r/min)		1350/1250/1150		
	Output power(W)		34		
	Fan type/piece		Cross flow fan-1		
	Diameter-length(mm)		ϕ 91mm-616		
	Evaporator		Aluminum fin-copper tube		
	Row-fin distance(mm)		2-1.5		
	Working area(m^2)		0.18		
	Swing motor		MP24GA		
	Input power(W)		2		
	Fuse(A)		Controller 3.15A Transformer 0.2A		
	Working capacitor(μF)		1		
	Noise(dB(A))		⩽ 46		
	Dimension(width-height-depth)mm		830 × 285 × 189		
	Net weight(kg)		11		
Outdoor unit	Model		KT3F-45W/J1-12205	KT3FR-45W/J1-12205	
	Input power(W)		1950	1950/2250	
	Current(A)		8.9	8.9/10.2	
	L.R.A.(A)		35		
	Throttling method		Capillary		
	Compressor		COPELAND C124KQ-PEZ-240CY	COPELAND C124KQ-PEZ-240CY	
	Starting method		Capacitor staring		
	Working temp.		⩽ 115℃		
	Condenser		Aluminum fin-copper tube		
	Pipe-diameter		9.52		
	Row-fin distance(mm)		2-1.7		
	Working area(m^2)		0.4		
	Fan motor power(w)/speed(rpm)		60/780		
	Type-piece		Axial fan-1		
	Diameter(mm)		460		
	Defrosting method		Auto defrost		
	Noise dB(A)		<58		
	Dimension(mm)(width-height-depth)		950 × 710 × 410		
	Net weight(kg)		59		
	Refrigerant charge (kg)		R22/1.5kg	R22/1.5kg	
Connecting pipe	Length		4		
	Outer diameter of connecting pipe	Liquid pipe(mm)	6(1/4")		
		Gas pipe(mm)	12(1/2")		
	Max distance	Height(m)	5		
		Length(m)	10		

The technical date are subject to change without notice .Please refer to the nameplate of the unit.

2.3 Performance curve

1.Cooling operation:In testing, Indoor unit and outdoor unit have the same work condition.

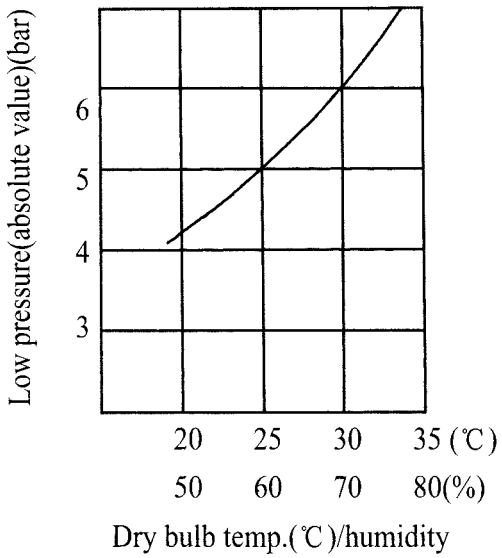

2.Heating operation

Indoor operation condition:Dry bulb temp21℃, Wet bulb temp.15.5℃.

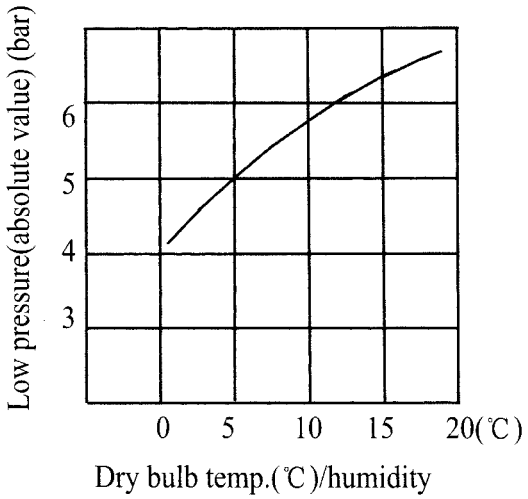

figure 2-3

Cooling performance

Indoor relative humidity50%

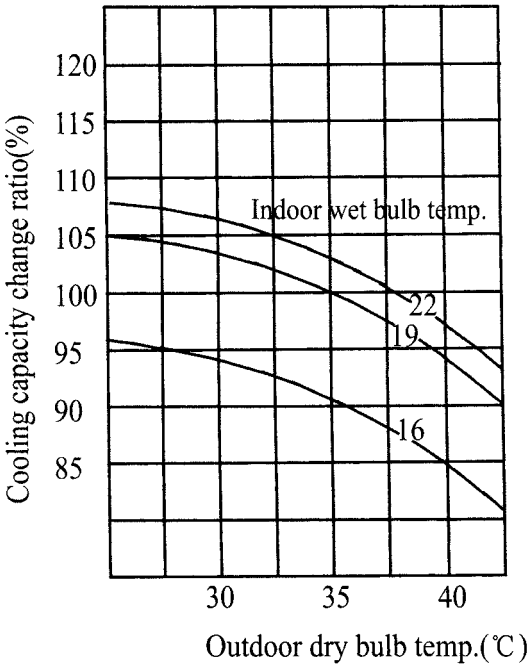

Heating performance (not include electric heater)
Outdoor relative humidity50%

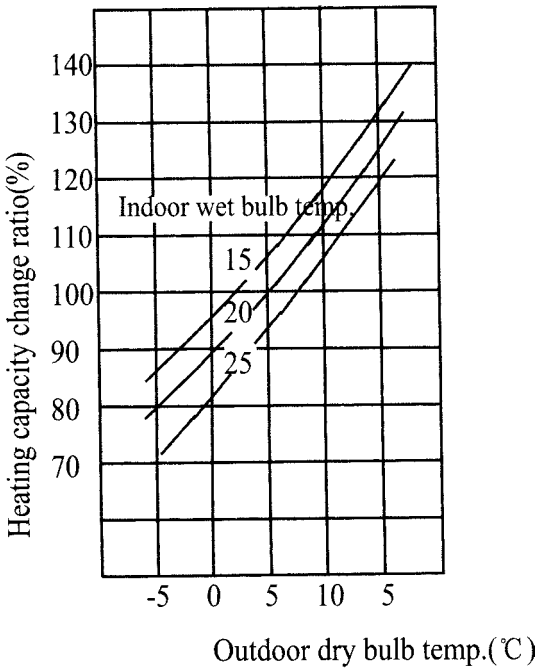

Cooling performance

Indoor relative humidity50%

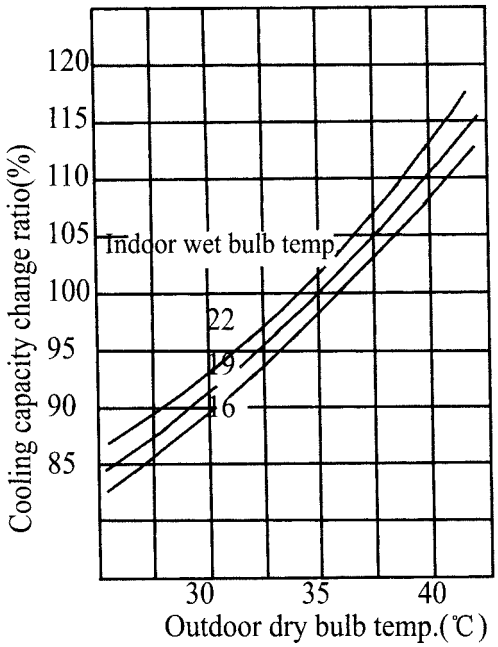

Heating performance (not include electric heater)
Outdoor relative humidity50%

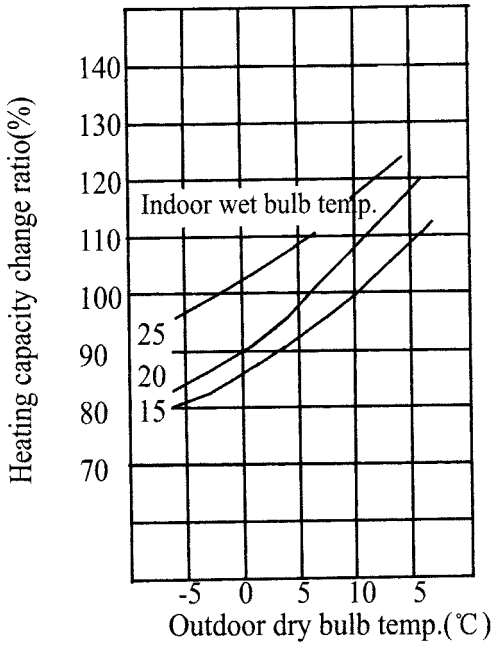

figure 2-4

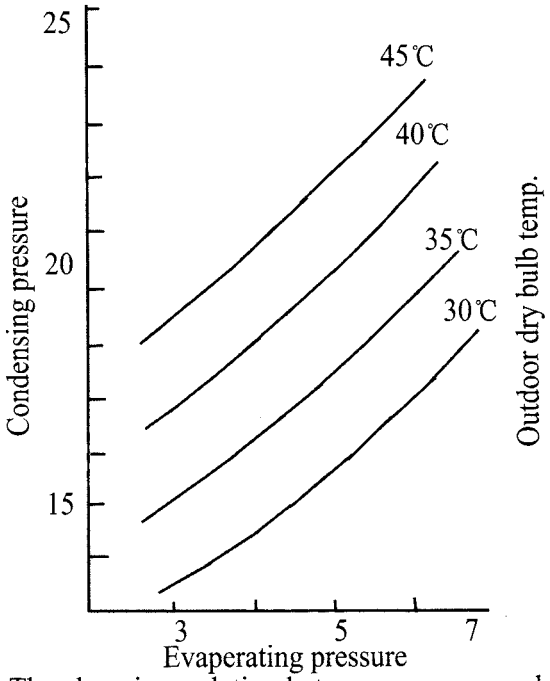

The changing relation between pressure and temp. in cooling work condition(Indoor work condition:Dry bulb 27℃, Wet bulb 19℃)

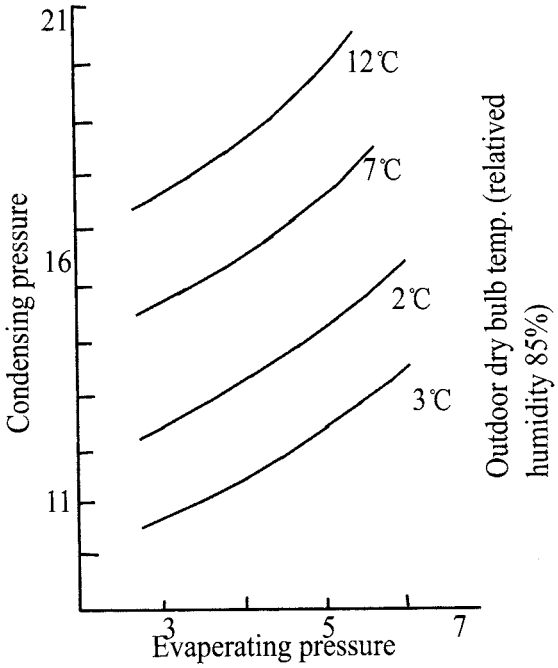

The changing relation between pressure and temp. in heating work condition (Indoor work condition:Dry bulb 20℃)

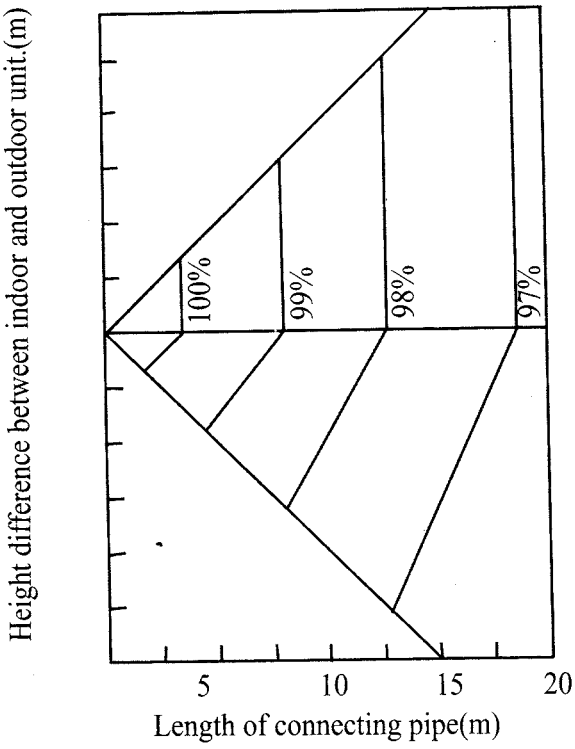

The changing relation between cooling capacity and length of connecting pipe.

figure 2-5

2.4 Outlines and dimensions of indoor unit

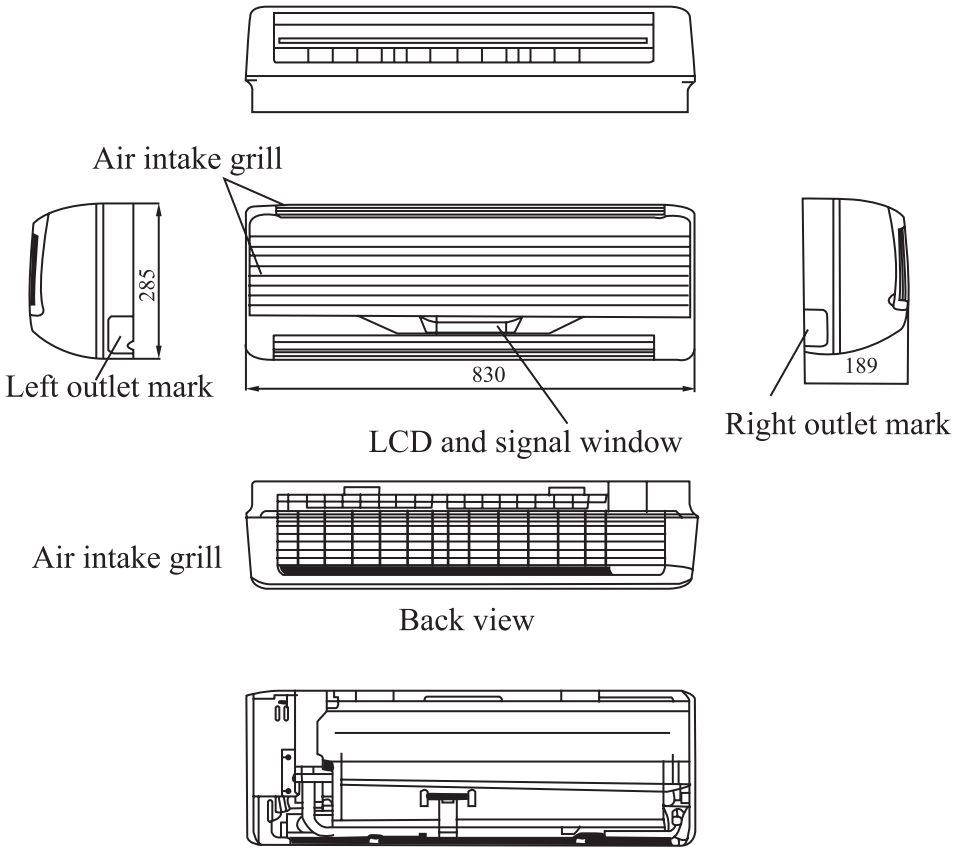

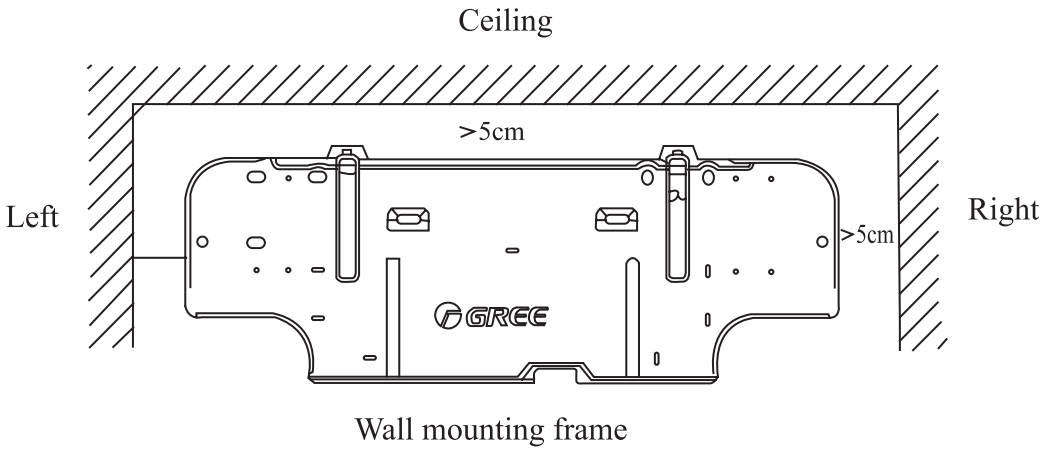

figure 2-6

2.5 Outlines and dimensions of outdoor unit

2.5.1 For CE Standard model.

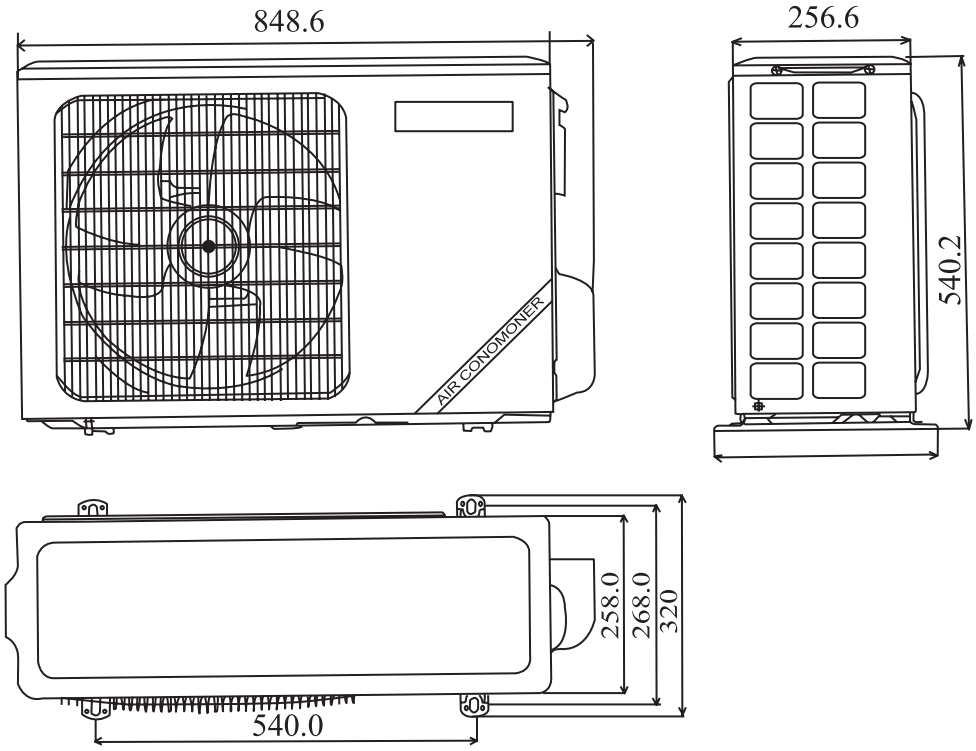

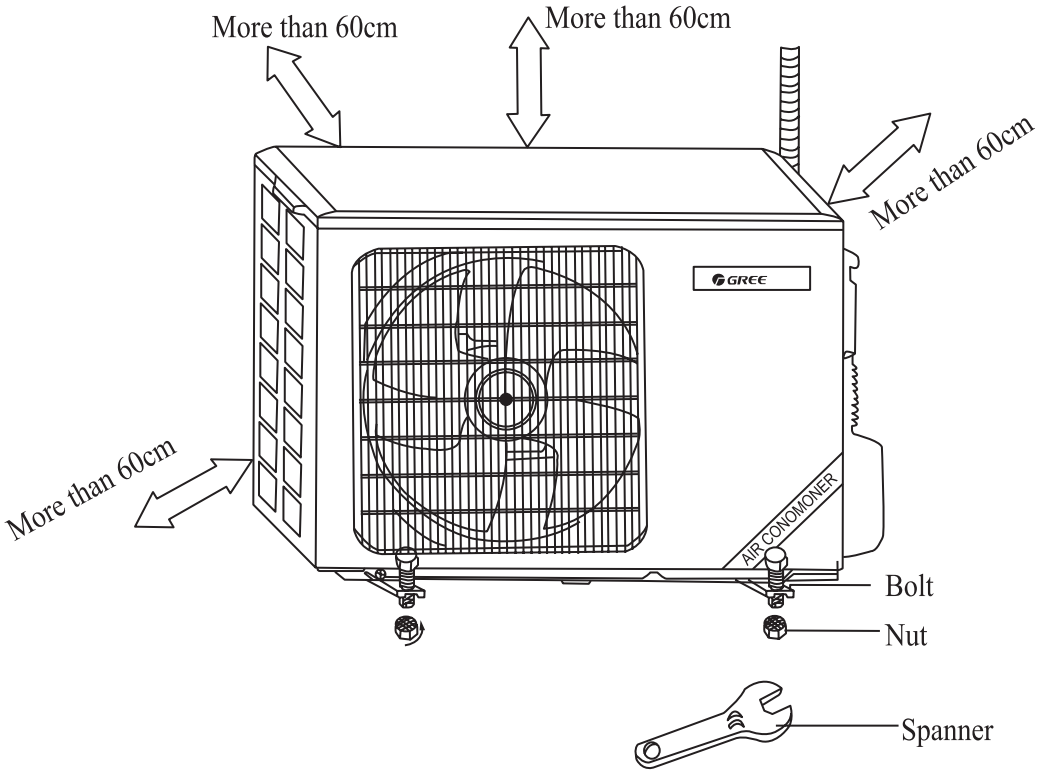

figure 2-7

2.5 Outlines and dimensions of outdoor unit

2.5.2 For R407C and tropical model.

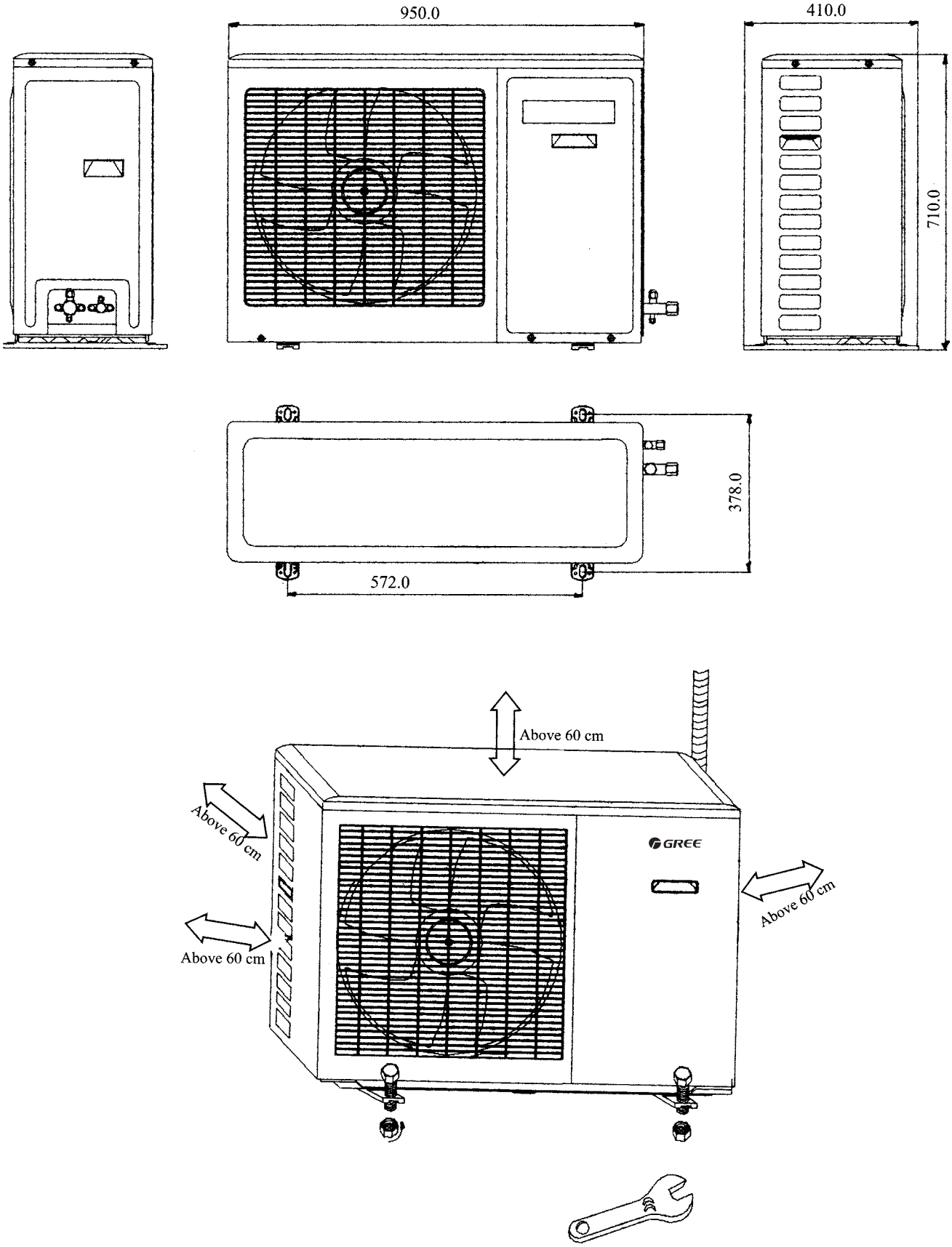

figure 2-8

2.6 Explosive view for indoor unit

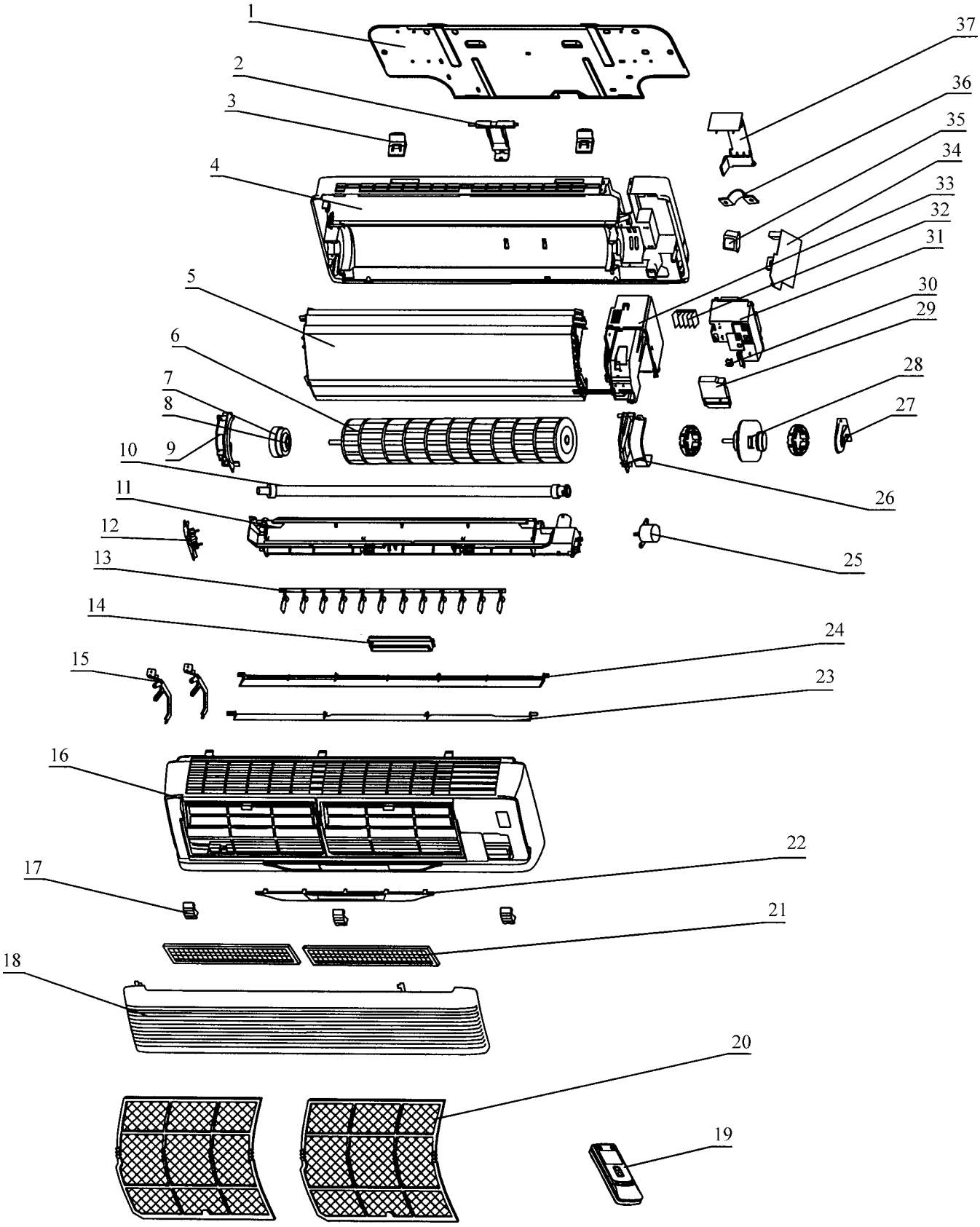

figure 2-9

2.7 Spare parts list of indoor unit

Table 2-9

No.	Description		Part No						Qty
			KF-20G/J (2035M)	KFR-20G/ (2045M)	KF-25G/J (2535M)	KFR-20G/ (2545M)	KF-35G/J (3535M)	KFR-35G/ (3545M)	
1	Wall-Mounting Frame	壁挂板(取消GREE字样)	01252381	01252381	01252381	01252381	01252381	01252381	1
2	Pipe clamp	卡管板	26112425	26112425	26112425	26112425	26112425	26112425	1
3	Hook	挂板钩	26272421	26272421	26272421	26272421	26272421	26272421	2
4	Rear Case	底壳	22202013	22202013	22202013	22202013	22202013	22202013	1
5	Evaporator Assy	蒸发器部件	01002032	01002032	01002032	01002032	01002046	01002046	1
6	Cross Flow Fan	贯流风叶部件	10352405	10352405	10352405	10352405	10352405	10352405	1
7	Ring of Bearing	轴承胶座	26712015	26712015	26712015	26712015	26712015	26712015	1
8	Fan Bearing	风扇轴承	76512210	76512210	76512210	76512210	76512210	76512210	1
9	Left clamp of motor	电机左卡板	26112428	26112428	26112428	26112428	26112428	26112428	1
10	Drainage Pipe	排水管	05232411	05232411	05232411	05232411	05232411	05232411	1
11	Water Tray	接水盘	20182439	20182439	20182439	20182439	20182439	20182439	1
12	Stepping Motor Gear	导风电机齿轮组	10592001	10592001	10592001	10592001	10592001	10592001	1
13	Swing Assy	扫风部件	10102001	10102001	10102001	10102001	10102001	10102001	1
14	LCD display assy	液晶显示屏组件	22242007	22242007	22242007	22242007	22242007	22242007	1
15	Guide Louver Holder	导风板支撑架	24212429	24212429	24212429	24212429	24212429	24212429	2
16	Front Case Assy	面板体	20002407	20002407	20002407	20002407	20002407	20002407	1
17	Screw Cover	螺钉盖	24252440	24252440	24252440	24252440	24252440	24252440	3
18	Front Panel	面板	20002404	20002404	20002404	20002404	20002404	20002404	1
19	Remote control	遥控器Y512	30512505	30512505	30512505	30512505	30512505	30512505	1
20	Filter	过滤网	11122443	11122443	11122443	11122443	11122443	11122443	2
21	Filter	净化器滤网	11012422	11012422	11012422	11012422	11012422	11012422	2
22	LCD Paneling	液晶镶板	22432241	22432241	22432241	22432241	22432241	22432241	1
23	Guide Louver	小导风板	10512428	10512428	10512428	10512428	10512428	10512428	1
24	Guide Louver	大导风板	10512427	10512427	10512427	10512427	10512427	10512427	1
25	Stepping Motor MP24GA	步进电机MP24GA	15212102	15212102	15212102	15212102	15212102	15212102	1
26	Right clamp of motor	电机右卡板	26112429	26112429	26112429	26112429	26112429	26112429	1
27	Bearing holder	轴承座	26152423	26152423	26152423	26152423	26152423	26152423	1
28	Motor	电机FN8E-PG	15012007	15012007	15012007	15012007	15012007	15012007	1
29	Covering plate	接线盖板	22242411	22242411	22242411	22242411	22242411	22242411	1
30	Switching plate	开关拨动片	26272422	26272422	26272422	26272422	26272422	26272422	1
31	Cover of electric box	电器盒顶盖	20102430	20102430	20102430	20102430	20102430	20102430	1
32	Terminal board	接线板T4A3A	42011240	42011240	42011240	42011240	42011240	42011240	1
33	Electric box	电器盒	20102429	20102429	20102429	20102429	20102429	20102429	1
34	PCB 5E51D2A TB	控制器 5E51D2A TB	30025299	\	30025299	\	\	\	1
34	PCB 5E52D-2A TB	控制器 5E52D2A TB	\	30025501	\	30025501	\	\	1
34	PCB 5E51F2A TB	控制器 5E51F2A TB	\	\	\	\	30025500	\	1
34	PCB 5E52F-2A TB	控制器 5E52F2A TB	\	\	\	\	\	30025502	1
35	Transformer	电源变压器 SC21C	43110161	43110161	43110161	43110161	43110161	43110161	1
36	Wire clamp A	电线夹(中)	71010103	71010103	71010103	71010103	71010103	71010103	1
37	Rear clamp	后板卡板	26112430	26112430	26112430	26112430	26112430	26112430	1
38	Power cable	电源线	40020202	40020202	40020202	40020202	40020203	40020203	1
39	Interconnecting cable	电源连接线	40020402	40020402	40020402	40020402	40020403	40020403	1
40	Signal cable	信号控制线	\	40032107	\	40032107	\	40032107	1
41	room sensor	室温感温包	39000155	39000155	39000155	39000155	39000155	39000155	1
42	tube sensor	管温感温包	39000116	39000159	39000116	39000159	39000116	39000159	1

The data are subject to change without notice.

Table 2-10

Description		Part No								Qty
		KF-45G/J (4535M) LCD	KFR-45G/J (4545M) LCD	KF-45G/ (3535M)N	KFR-45G/ (4545M)N	KF-45G/ (4535M) LED	KFR-45G/ (4545M) LED	GSW18-22L/A(I)	GSW18-22R/A(I)	
1 Wall-Mounting Frame	壁挂板(取消GREE字样)	01252381	01252381	01252381	01252381	01252381	01252381	01252381	01252381	1
2 Pipe clamp	卡管板	26112425	26112425	26112425	26112425	26112425	26112425	26112425	26112425	1
3 Hook	挂板钩	26272421	26272421	26272421	26272421	26272421	26272421	26272421	26272421	2
4 Rear Case	底壳	22202013	22202013	22202013	22202013	22202013	22202013	22202013	22202013	1
5 Evaporator Assy	蒸发器部件	01002017	01002017	01002017	01002017	01002017	01002017	01002017	01002017	1
6 Cross Flow Fan	贯流风叶部件	10352405	10352405	10352405	10352405	10352405	10352405	10352405	10352405	1
7 Ring of Bearing	轴承胶座	26712015	26712015	26712015	26712015	26712015	26712015	26712015	26712015	1
8 Fan Bearing	风扇轴承	76512210	76512210	76512210	76512210	76512210	76512210	76512210	76512210	1
9 Left clamp of motor	电机左卡板	26112428	26112428	26112428	26112428	26112428	26112428	26112428	26112428	1
10 Drainage Pipe	排水管	05232411	05232411	05232411	05232411	05232411	05232411	05232411	05232411	1
11 Water Tray	接水盘	20182439	20182439	20182439	20182439	20182439	20182439	20182439	20182439	1
12 Stepping Motor Gear	导风电机齿轮组	10592001	10592001	10592001	10592001	10592001	10592001	10592001	10592001	1
13 Swing Assy	扫风部件	10102001	10102001	10102001	10102001	10102001	10102001	10102001	10102001	1
14 LCD display assy	液晶显示屏组件	22242007	22242007	22242007	22242007	22242007	22242007	22242007	22242007	1
15 Guide Louver Holder	导风板支撑架	24212429	24212429	24212429	24212429	24212429	24212429	24212429	24212429	2
16 Front Case Assy	面板体	20002407	20002407	20002407	20002407	20002407	20002407	20002407	20002407	1
17 Screw Cover	螺钉盖	24252440	24252440	24252440	24252440	24252440	24252440	24252440	24252440	3
18 Front Panel	面板	20002404	20002404	20002404	20002404	20002404	20002404	20002404	20002404	1
19 Remote control	遥控器Y512	30512505	30512505	30512505	30512505	30512505	30512505	30512505	30512505	1
20 Filter	过滤网	11122443	11122443	11122443	11122443	11122443	11122443	11122443	11122443	2
21 Filter	净化器滤网	11012422	11012422	11012422	11012422	11012422	11012422	11012422	11012422	2
22 LCD Paneling	液晶镶板	22432439	22432439	22432439	22432439	22432241	22432241	22432241	22432241	1
23 Guide Louver	小导风板	10512428	10512428	10512428	10512428	10512428	10512428	10512428	10512428	1
24 Guide Louver	大导风板	10512427	10512427	10512427	10512427	10512427	10512427	10512427	10512427	1
25 Stepping Motor MP24GA	步进电机MP24GA	15212102	15212102	15212102	15212102	15212102	15212102	15212102	15212102	1
26 Right clamp of motor	电机右卡板	26112429	26112429	26112429	26112429	26112429	26112429	26112429	26112429	1
27 Bearing holder	轴承座	26152423	26152423	26152423	26152423	26152423	26152423	26152423	26152423	1
28 Motor FN20G-PG	电机FN20G-PG	15012022	15012022	15012022	15012022	15012022	15012022	\	\	1
Motor FN20H-PG	电机FN20H-PG	\	\	\	\	\	\	15012027	15012027	1
29 Covering plate	接线盖板	22242411	22242411	22242411	22242411	22242411	22242411	22242411	22242411	1
30 Switching plate	开关拨动片	26272422	26272422	26272422	26272422	26272422	26272422	26272422	26272422	1
31 Cover of electric box	电器盒顶盖	20102430	20102430	20102430	20102430	20102430	20102430	20102430	20102430	1
32 Terminal board T4B3A	四位接线板T4B3A	42011233	42011233	42011233	42011233	42011233	42011233	\	\	1
32 Terminal board GT4B3A1	接线板GT4B3A1	\	\	\	\	\	\	42011030	42011030	1
33 Electric box	电器盒	20102429	20102429	20102429	20102429	20102429	20102429	20102429	20102429	1

The data are subject to change without notice.

Table 2-11

No.	Description		Part No								Qty
			KF-45G/J (4535M) LCD	KFR-45G/J (4545M) LCD	KF-45G/ (3535M)N	KFR-45G/ (4545M)N	KF-45G/ (4535M) LED	KFR-45G/ (4545M) LED	GSW18-22L/A(I)	GSW18-22R/A(I)	
34	PCB 5151E2A TB	控制器 5151E2A TB	30025215	\	\	\	\	\	\	\	1
34	PCB 5152E12A TB	控制器 5152E12A TB	\	30025222	\	\	\	\	\	\	1
34	PCB 5151E2A1 TB	控制器 5151E2A1 TB	\	\	30025517	\	\	\	\	\	1
34	PCB 5152E12A1 TB	控制器5152E12A1 TB	\	\	\	30025518	\	\	\	\	1
34	PCB5E51E2A	控制器 5E51E2A	\	\	\	\	30025004	\	\	\	1
34	PCB5E52E12A	控制器 5E52E12A	\	\	\	\	\	30025006	\	\	1
34	PCB 5E51E1A TB	控制器 5E51E1A TB	\	\	\	\	\	\	30025279	\	1
34	PCB 5E53E11A TB	控制器 5E53E11A TB	\	\	\	\	\	\	\	30025287	1
35	Transformer SC21C(130℃)	电源变压器SC21C(130℃)	43110161	43110161	43110161	43110161	43110161	43110161	\	\	1
35	Transformer SC28C1	电源变压器SC28C1	\	\	\	\	\	\	43110172	43110172	1
36	Wire clamp A	电线夹(中)	71010103	71010103	71010103	71010103	71010103	71010103	71010103	71010103	1
37	Rear clamp	后板卡板	26112430	26112430	26112430	26112430	26112430	26112430	26112430	26112430	1
38	Power cable	电源线	40020389	40020389	40020389	40020389	40020389	40020389	40020273	40020273	1
39	Interconnecting cable	电源连接线	40020427	40020427	40020427	40020427	40020427	40020427	40020324	40020324	1
40	Signal cable	信号控制线	\	40032107	\	40032107	\	40032107	\	40032119	1
41	room sensor	室温感温包	39000155	39000155	39000155	39000155	39000155	39000155	39000155	39000155	1
42	tube sensor	管温感温包	39000116	39000159	39000116	39000159	39000116	39000159	39000116	39000159	1

The data are subject to change without notice.

Table 2-12

No.	Description		Part No.				Qty
			KT3F-45G/JI-12205	KT3FR-45G/JI-12205	KT3F-45G/JI	KT3FR-45G/JI	
1	Wall-Mounting Frame	壁挂板(取消GREE字样)	01252381	01252381	01252381	01252381	1
2	Pipe clamp	卡管板	26112425	26112425	26112425	26112425	1
3	Hook	挂板钩	26272421	26272421	26272421	26272421	2
4	Rear Case	底壳	22202013	22202013	22202013	22202013	1
5	Evaporator Assy	蒸发器部件	01002017	01002017	01002017	01002017	1
6	Cross Flow Fan	贯流风叶部件	10352405	10352405	10352405	10352405	1
7	Ring of Bearing	轴承胶座	26712015	26712015	26712015	26712015	1
8	Fan Bearing	风扇轴承	76512210	76512210	76512210	76512210	1
9	Left clamp of motor	电机左卡板	26112428	26112428	26112428	26112428	1
10	Drainage Pipe	排水管	05232411	05232411	05232411	05232411	1
11	Water Tray	接水盘	20182439	20182439	20182439	20182439	1
12	Stepping Motor Gear	导风电机齿轮组	10592001	10592001	10592001	10592001	1
13	Swing Assy	扫风部件	10102001	10102001	10102001	10102001	1
14	LCD display assy	液晶显示屏组件	22242007	22242007	22242007	22242007	1
15	Guide Louver Holder	导风板支撑架	24212429	24212429	24212429	24212429	2
16	Front Case Assy	面板体	20002407	20002407	20002407	20002407	1
17	Screw Cover	螺钉盖	24252440	24252440	24252440	24252440	3
18	Front Panel	面板	20002404	20002404	20002404	20002404	1
19	Remote control	遥控器Y512	30512505	30512505	30512505	30512505	1
20	Filter	过滤网	11122443	11122443	11122443	11122443	2
21	Filter	净化器滤网	11012422	11012422	11012422	11012422	2
22	LCD Paneling	液晶镶板	22432241	22432241	22432241	22432241	1
23	Guide Louver	小导风板	10512428	10512428	10512428	10512428	1
24	Guide Louver	大导风板	10512427	10512427	10512427	10512427	1
25	Stepping Motor MP24GA	步进电机MP24GA	15212102	15212102	15212102	15212102	1
26	Right clamp of motor	电机右卡板	26112429	26112429	26112429	26112429	1
27	Bearing holder	轴承座	26152423	26152423	26152423	26152423	1
28	Motor FN20H-PG	电机FN20H-PG	\	\	15012027	15012027	1
28	Motor FN20G-PG	电机FN20G-PG	15012022	15012022	\	\	1
29	Covering plate	接线盖板	22242411	22242411	22242411	22242411	1
30	Switching plate	开关拨动片	26272422	26272422	26272422	26272422	1
31	Cover of electric box	电器盒顶盖	20102430	20102430	20102430	20102430	1
32	Terminal board GT4B3A1	接线板GT4B3A1	42011030	42011030	42011030	42011030	1
33	Electric box	电器盒	20102429	20102429	20102429	20102429	1
34	PCB 5151E1A TB	控制器 5151E1A TB	30025520	\	30025520	\	1
34	PCB 5153E11A TB	控制器5153E11A TB	\	30025519	\	30025519	1
35	Transformer SC28C1	电源变压器SC28C1	43110172	43110172	43110172	43110172	1
36	Wire clamp A	电线夹(中)	71010103	71010103	71010103	71010103	1
37	Rear clamp	后板卡板	26112430	26112430	26112430	26112430	1
38	Power cable	电源线	40020274	40020274	40020273	40020273	1
39	Interconnecting cable	电源连接线	40020324	40020324	40020324	40020324	1
40	Signal cable	信号控制线	\	40032119	\	40032119	1
41	room sensor	室温感温包	39000155	39000155	39000155	39000155	1
42	tube sensor	管温感温包	39000116	39000159	39000116	39000159	1

The data are subject to change without notice.

2.8 Explosive view of outdoor unit

2.8.1 For CE Standard model.

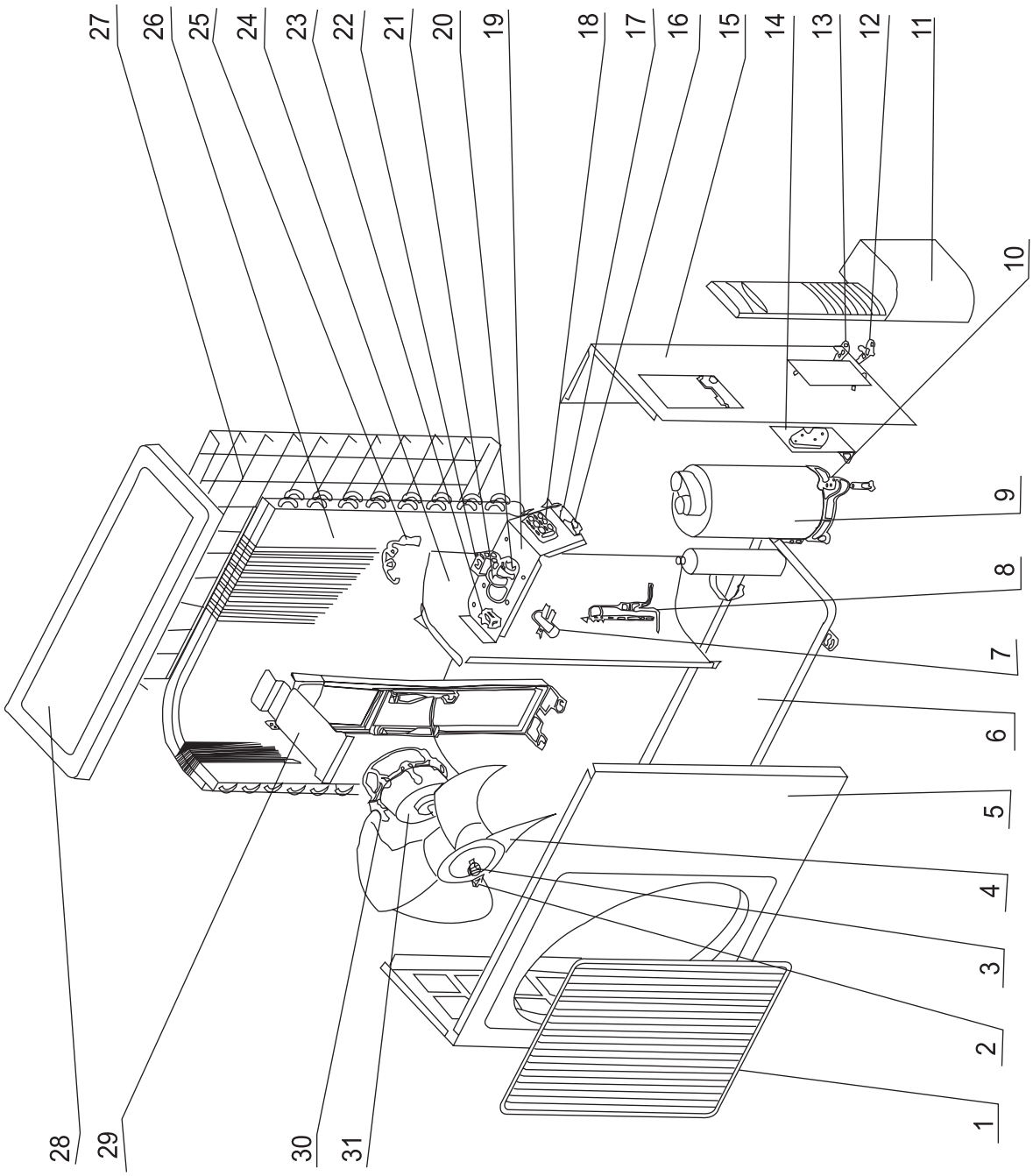

figure 2-10

2.8.2 Spare parts list of outdoor unit (for CE Stanndard)

Table 2-13

No.	Description		Part No.						Qty
			KF-20W/J	KFR-20W/J	KF-25W/J	KFR-25W/J	KF-35W/J	KFR-35W/J	
1	Front Grill	面板格栅	22413431	22413431	22413431	22413431	22413431	22413431	1
2	Nut M6	螺母 M6	70310131	70310131	70310131	70310131	70310131	70310131	1
3	Washer 6	垫片 6	70410252	70410252	70410252	70410252	70410252	70410252	1
4	Axial Flow Fan	轴流风叶	10333412	10333412	10333412	10333412	10333412	10333412	1
5	Front Plate	面板	01533428	01533428	01533428	01533428	01533428	01533428	1
6	Metal Base	底盘组件	01203004	01203004	01203335	01203324	01213045	01213045	1
7	4-way Valve	四通阀	\	43000301	\	43000312	\	43000312	1
8	Capillary Assy	毛细管组件	03003402	03003002	03003024	03003170	03003423	03003062	1
9	Compressor SG333DB1	压缩机及其配件 SG333DB1	00100121	\	\	\	\	\	1
9	Compressor SG433EB2	压缩机及其配件 SG433EB2	\	00100123	\	\	\	\	1
9	Compressor SG533GA1UA	压缩机及其配件 SG533QA1UA	\	\	00100126	\	\	\	1
9	Compressor RH174VHAC	压缩机及其配件 RH174VHAC	\	\	\	00120078	\	\	1
9	Compressor C-RV222H1AA	压缩机及其配件 C-RV222H1AA	\	\	\	\	00100340	\	1
9	Compressor C-RV232BH1AA	压缩机及其配件 C-RV232BH1AA	\	\	\	\	\	00100339	1
10	Nut with Washer M8	带垫螺母	70310014	70310014	70310014	70310014	70310014	70310014	3
11	Handle	大提手组件	26233021	26233021	26233021	26233021	26233021	26233021	1
12	Valve 3/8"	阀门3/8"	07100143	07100143	07100143	07100143	\	\	
12	Valve 1/2"	阀门1/2"	\	\	\	\	07100142	07100142	1
13	Valve 1/4"	阀门1/4"	07100115	07100115	07100115	07100115	07100115	07100115	1
14	Valve Support	阀门支架	01713424	01713424	01713424	01713424	01713424	01713424	1
15	Right Side Plate Assy	右侧板组件	01302000	01302000	01302000	01302000	01302000	01302000	1
16	Wire Clamp	电线夹	71010103	71010103	71010103	71010103	71010103	71010103	2
17	Insulation Gasket D	绝缘垫片 D	70410525	70410525	70410525	70410525	70410525	70410525	1
18	Terminal Board T386A	三位接线板	42011241	42011241	42011241	42011241	42011241	42011241	1
19	Electric Plate	电器盒	01413425	01413425	01413425	01413425	01413425	01413425	1
20	Comp Capacitor 30uF/450V	电容 (30uF/450VAC)	33000021	33000021	33000021	\	33000021	33000021	1
20	Comp Capacitor 25uF/450V	电容 (25uF/450VAC)	\	\	\	33000020	\	\	1
21	Capacitor clamp	电容夹	02143401	02143401	02143401	02143401	02143401	02143401	1
22	Fan Capacitor 2.5uF/450V	电容 (2.5uF/450VAC)	33010026	33010026	33010026	33010026	33010026	\	1
22	Fan Capacitor 3uF/450V	电容 (3uF/450VAC)	\	\	\	\	\	33010027	1
23	Terminal Board 2-8	接线板2-8	\	42011103	\	42011103	\	42011103	1
24	Isolation Sheet Assy	隔板组件	01233417	01233417	01233417	01233417	01233417	01233417	1
25	Tube Sensor	管温感温包	\	39000115	\	39000115	\	39000115	1
26	Condenser Assy	冷凝器组件	01103341	01103202	\	\	\	\	1
26	Condenser Assy	冷凝器组件	\	\	01103341	01103052	\	\	1
26	Condenser Assy	冷凝器组件	\	\	\	\	01103092	01103203	1
27	Rear grill Assy	后护网组件	11123402	11123402	11123402	11123402	11123402	11123402	1
28	Top cover Assy	顶盖组件	01253261	01253261	01253261	01253261	01253261	01253261	1
29	Motor Support	电机支架	01703391	01703391	01703391	01703391	01703391	01703391	1
30	Self-tapping Screw	螺钉	10140165	10140165	10140165	10140165	10140165	10140165	4
31	Motor FW25E	电机(FW30A)	15013101	15013101	15013101	15013101	\	\	1
31	Motor FW30E	电机(FW36A)	\	\	\	\	15013102	15013102	1

The data are subject to change without notice.

Table 2-14

No.	Description	名称及规格	Part No.				Qty
			KF-45W/J	KFR-45W/J	GSW18-22L/A(O)	GSW18-22R/A(O)	
1	Front Grill	面板格栅	22413431	22413431	22413431	22413431	1
2	Nut M6	螺母 M6	70310131	70310131	70310131	70310131	1
3	Washer 6	垫片 6	70410252	70410252	70410252	70410252	1
4	Axial Flow Fan	轴流风叶	10333412	10333412	10333412	10333412	1
5	Front Plate	面板	01533428	01533428	01533428	01533428	1
6	Metal Base	底盘组件	01203338	01203338	01200337	01203338	1
7	4-way Valve	四通阀组件	\	03023055	\	03023033	1
8	Capillary Assy	毛细管组件	03003139	03003138	03003039	03003052	1
9	Compressor PH290X2C-4FT1	压缩机及其配件 PH290X2C-4FT1	00100073	00100073	\	\	1
9	Compressor 2K25S236AHA	压缩机及其配件 2K25S236AHA	\	\	00100205	00100205	1
10	Nut with Washer M8	带垫螺母	70310014	70310014	70310014	70310014	3
11	Handle	大提手组件	26233021	26233021	26233021	26233021	1
12	Valve 1/4"	阀门1/4"	07100115	07100115	07100115	07100115	1
13	Valve 1/2"	阀门1/2"	07100142	07100142	07100142	07100142	1
14	Valve Support	阀门支架	01713424	01713424	01713424	01713424	1
15	Right Side Plate Assy	右侧板组件	01302000	01302000	01302000	01302000	1
16	Wire Clamp	电线夹	71010103	71010103	71010103	71010103	2
17	Insulation Gasket C	绝缘垫片	70410525	70411053	70411053	70411053	1
18	Terminal Board A	三位接线板 A	42011113	42011113	42011113	42011113	1
19	Electric Plate	电器盒	01413425	01413425	01413425	01413425	1
20	Comp Capacitor 35uF/450V	压缩机电容35uF/450V	33000027	33000027	\	\	1
20	Comp Capacitor 40uF/450V	压缩机电容40uF/450V	\	\	33000023	33000023	1
21	Capacitor clamp	电容夹	02141375	02141375	02141375	02141375	1
22	Fan Capacitor 2.5uF/450V	风机电容2.5uF/450V	33010026	33010026	33010026	33010026	1
23	Relay G7L-1A-T	继电器 G7L-1A-T	44020311	44020311	44020311	44020311	1
24	Isolation Sheet Assy	隔板组件	01233417	01233417	01233417	01233417	1
25	Tube Sensor	管温感温包	\	39000115	\	39000115	1
26	Condenser Assy	冷凝器组件	01103435	01103118	01103435	01103118	1
27	Rear grill Assy	后护网组件	11123402	11123402	11123402	11123402	1
28	Top cover Assy	顶盖组件	01253261	01253261	01253261	01253261	1
29	Motor Support	电机支架	01703391	01703391	01703391	01703391	1
30	Self-tapping Screw	螺钉	10140165	10140165	10140165	10140165	4
31	Motor FW48A	电机 FW48A	15013036	15013036	\	\	1
31	Motor FW48B	电机 FW48B	\	\	15013305	15013305	1

The data are subject to change without notice.

2.9 Spare parts list of outdoor unit (For R407C and tropical model.)

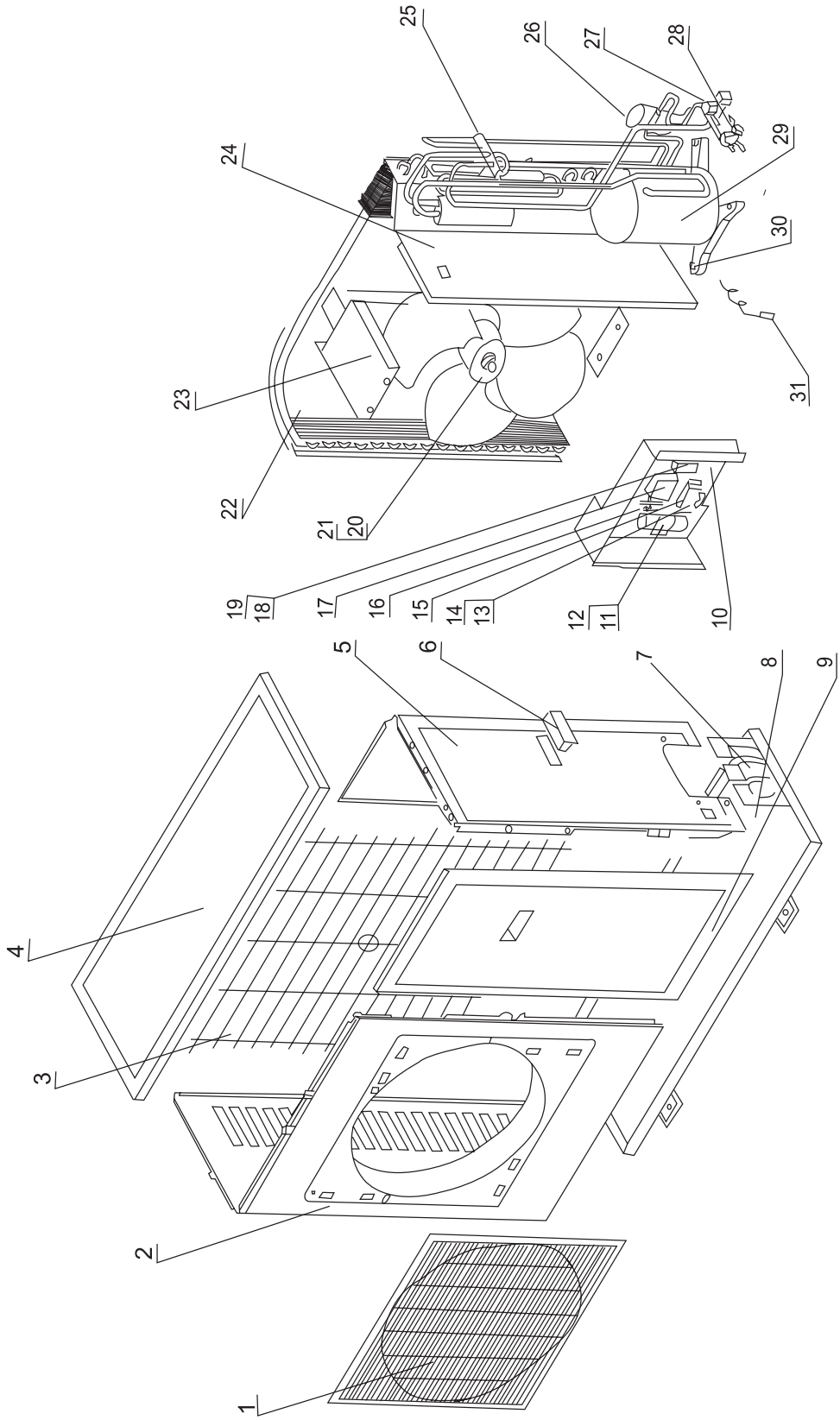

figure 2-11

2.9.2 Spare parts list of outdoor unit (For R407C and tropical model.)

Table 2-15

No.	Description		Part No.						Qty
			KF-45W/JN	KFR-45W/JN	KT3F-45W/J1-12205	KT3FR-45W/J1-12205	KT3F-45W/J1	KT3FR-45W/J1	
1	Front Grill	面罩组件	22265250	22265250	22265250	22265250	22265250	22265250	1
2	Front Plate	外罩	01433025	01433025	01433031	01433031	01433025	01433025	1
3	Rear grill Assy	网罩组件	01473024	01473024	01473024	01473024	01473024	01473024	1
4	Top cover Assy	顶盖组件	01255260	01255260	01255260	01255260	01255260	01255260	1
5	Rear Side Plate	后侧板	01305001	01305001	01305001	01305001	01305001	01305001	1
6	Handle	把手	26235253	26235253	26235253	26235253	26235253	26235253	1
7	Valve Support	阀门支架	01715256	01715256	01715256	01715256	01715256	01715256	1
8	Metal Base	底盘组件	01203065	01203065	01205010	01205010	01205010	01205010	1
9	Front Side Support	前侧板组件	01303019	01303019	01303019	01303019	01303019	01303019	1
10	Electric Plate	电器盒	20102007	20102007	01415011	01415011	01415011	01415011	1
11	Capacitor clamp	电容夹	02143442	02143442	02143441	02143441	02143441	02143441	1
12	Comp Capacitor 30uF	压缩机电容 30uF	33000021	33000021	\	\	\	\	1
12	Comp Capacitor 40uF	压缩机电容 40uF	\	\	33000023	33000023	\	\	1
12	Comp Capacitor 35uF	压缩机电容 35uF	\	\	\	\	33000027	3300027	1
13	Wire Clamp	电线夹	71010102	71010102	71010102	71010102	71010102	71010102	2
14	Insulation Gasket D	绝缘垫片	70410525	70410525	70410525	70410525	70410525	70410525	1
15	Terminal Board	接线板 T360I	\	\	42010245	42010245	42010245	42010245	1
15	Terminal Board	三位接线板	42011113	42011113	\	\	\	\	1
16	Fan Capacitor 3uF	风机电容 3uF	33010027	33010027	\	\	33010027	33010021	1
16	Fan Capacitor 2.5uF	风机电容 2.5uF			33010026	33010026	\	\	1
17	Start Relay 3ARR3CT24S5	启动继电器 3ARR3CT24S5	\	33020201	44020335	44020335	44020335	44020335	1
18	Terminal Board 2-8	接线板 2-8	\	42011103	42011103	42011103	42011103	42011103	1
19	Capacitor 145-174uF/250VAC	电源继电器 (G7L-1A-T)	44020311	44020311	44020311	44020311	44020311	44020311	1
20	Axial Flow Fan	轴流风叶	10335254	10335254	10335257	10335257	10335255	10335255	1
21	Motor FW60F	电机 FW60F	\	\	\	\	15013250	15013250	1
21	Motor LW80D	电机 LW80D	\	\	15015054	15015054	\	\	1
21	Motor FW60F	电机 FW38A	15013032	15013032	\	\	\	\	
22	Condenser Assy	冷凝器组件	01133353	01133354	01103149	01103144	01103142	01103144	1
23	Motor Support	电机支架	01703027	01703027	01703027	01703027	01703027	01703027	1
24	Isolation Sheet Assy	中间隔板组件	01233701	01233701	01233022	01233022	01233022	01233022	1
25	4-way Valve STF-0201	四通阀含电磁线圈 STF-0201	\	\	\	43000313	\	43000313	1
25	4-way Valve V26110B	四通阀含电磁线圈 V26110B	\	43000305	\	\	\	\	1
26	Capillary Assy	毛细管组件	03003008	03003009	03003171	03003172	03003007	03003091	1
27	Valve 1/2"	阀门 1/2"	07100001	07100001	07103008	07103008	07103008	07103008	1
28	Valve 1/4"	阀门 1/4"	07100131	07100131	07100014	07100014	07100014	07100014	1
29	Compressor CI18KQ-PFV-240F	压缩机及配件 CI18KQ-PFV-240F	\	\	\	\	00100345	00100345	1
29	Compressor CI24KQ-PFZ-240CY	压缩机及配件 C124KQ-PFZ-240CY	\	\	00100016	00100016	\	\	1
29	Compressor C-2RN150H5V	压缩机及配件 C-2RN150H5V	00100346	00100346	\	\	\	\	1
30	Nut with Washer M8	带垫螺母 M8	70310014	70310014	70310014	70310014	70310014	70310014	3
31	Tube Sensor	室外感温头 54SLF	\	39000006	\	39000006	\	39000006	1

2.10 Circuit diagram

These circuit diagrams are subject to change.
Please refer to the ones stuck on the machines.

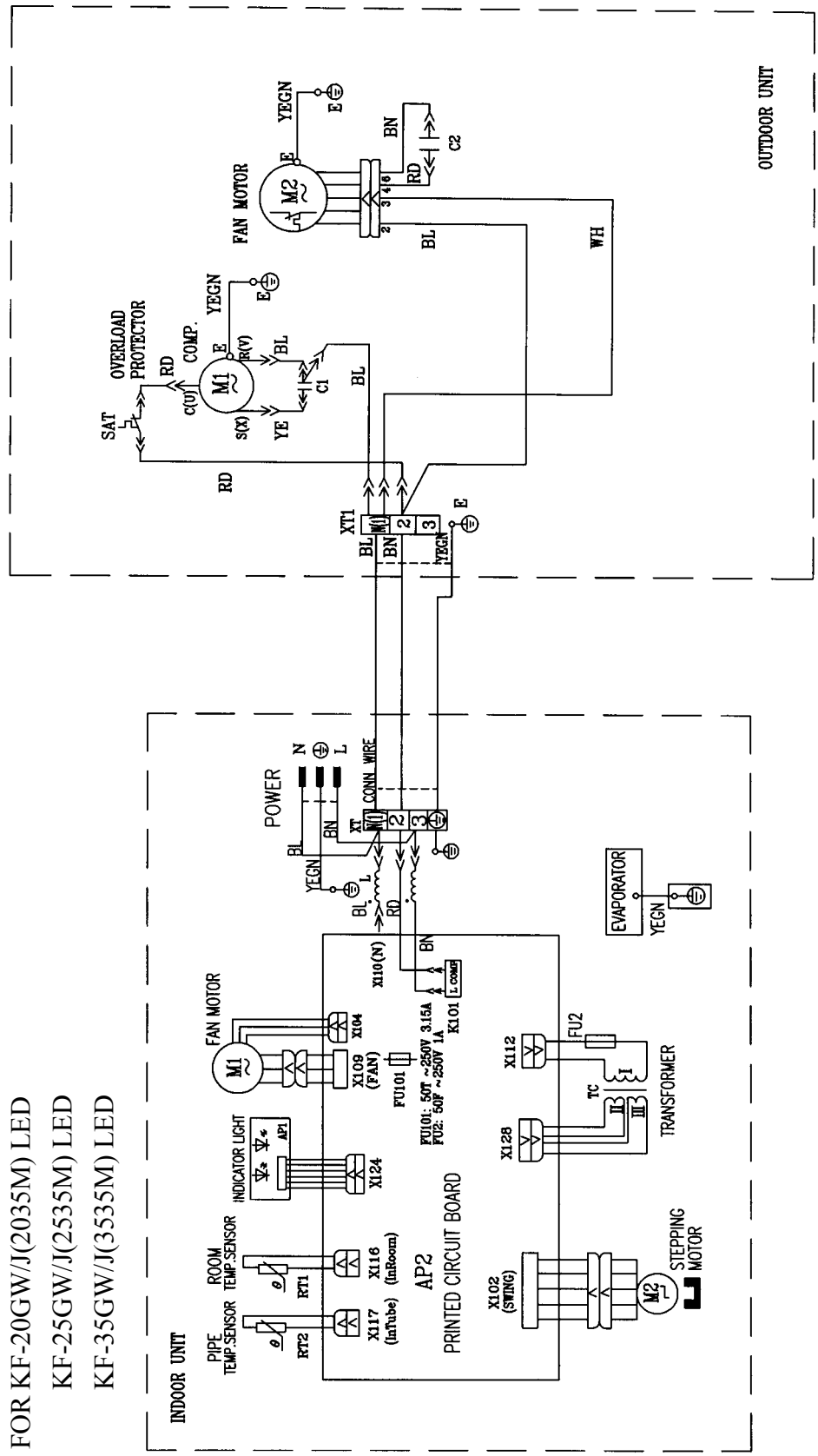

figure 2-12

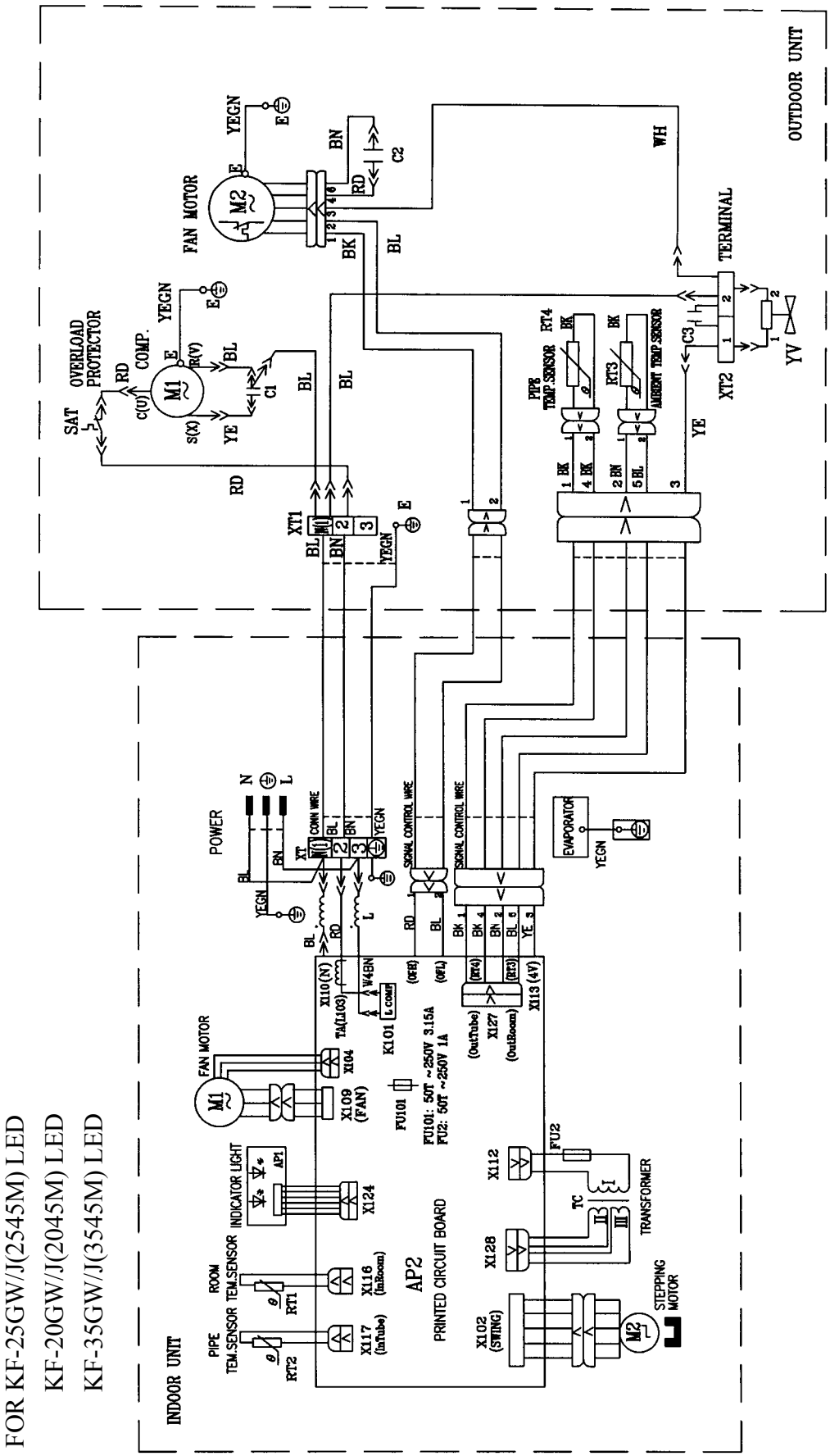

FOR KF-25GW/J(2545M) LED
KF-20GW/J(2045M) LED
KF-35GW/J(3545M) LED

figure 2-13

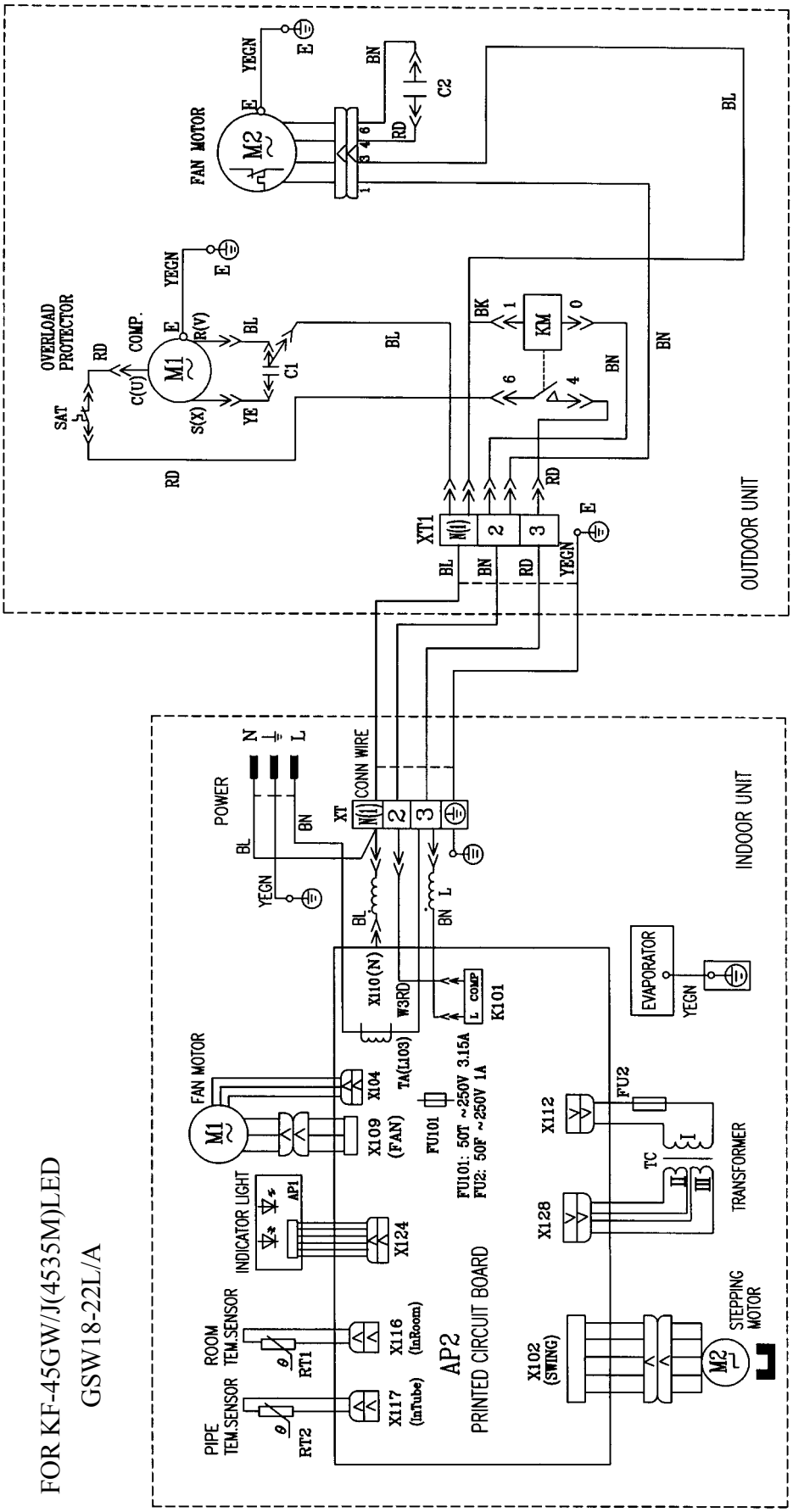

FOR KF-45GW/J(4535M)LED
GSW18-22L/A

figure 2-14

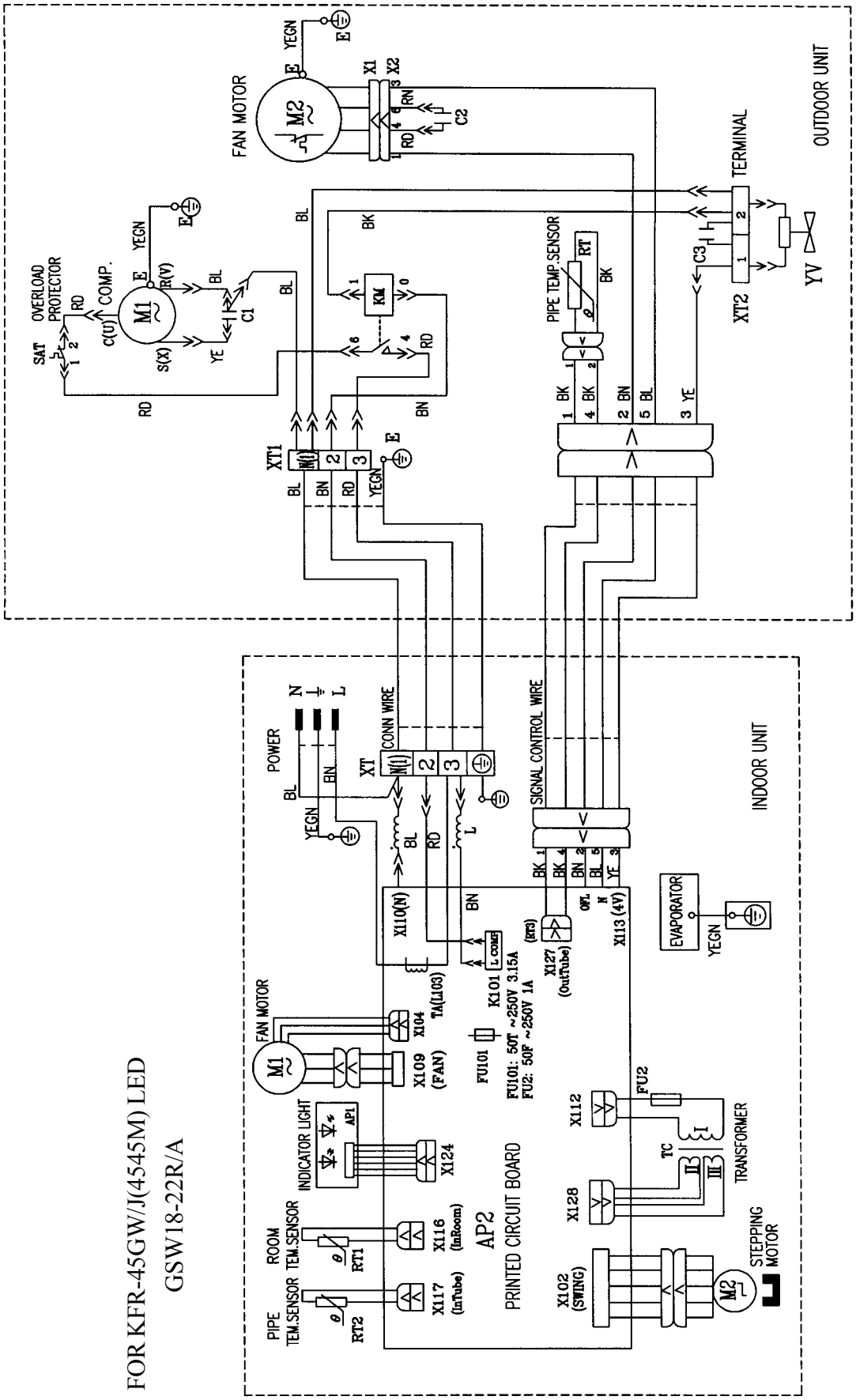

FOR KFR-45GW/J(4545M) LED
GSW18-22R/A

figure 2-15

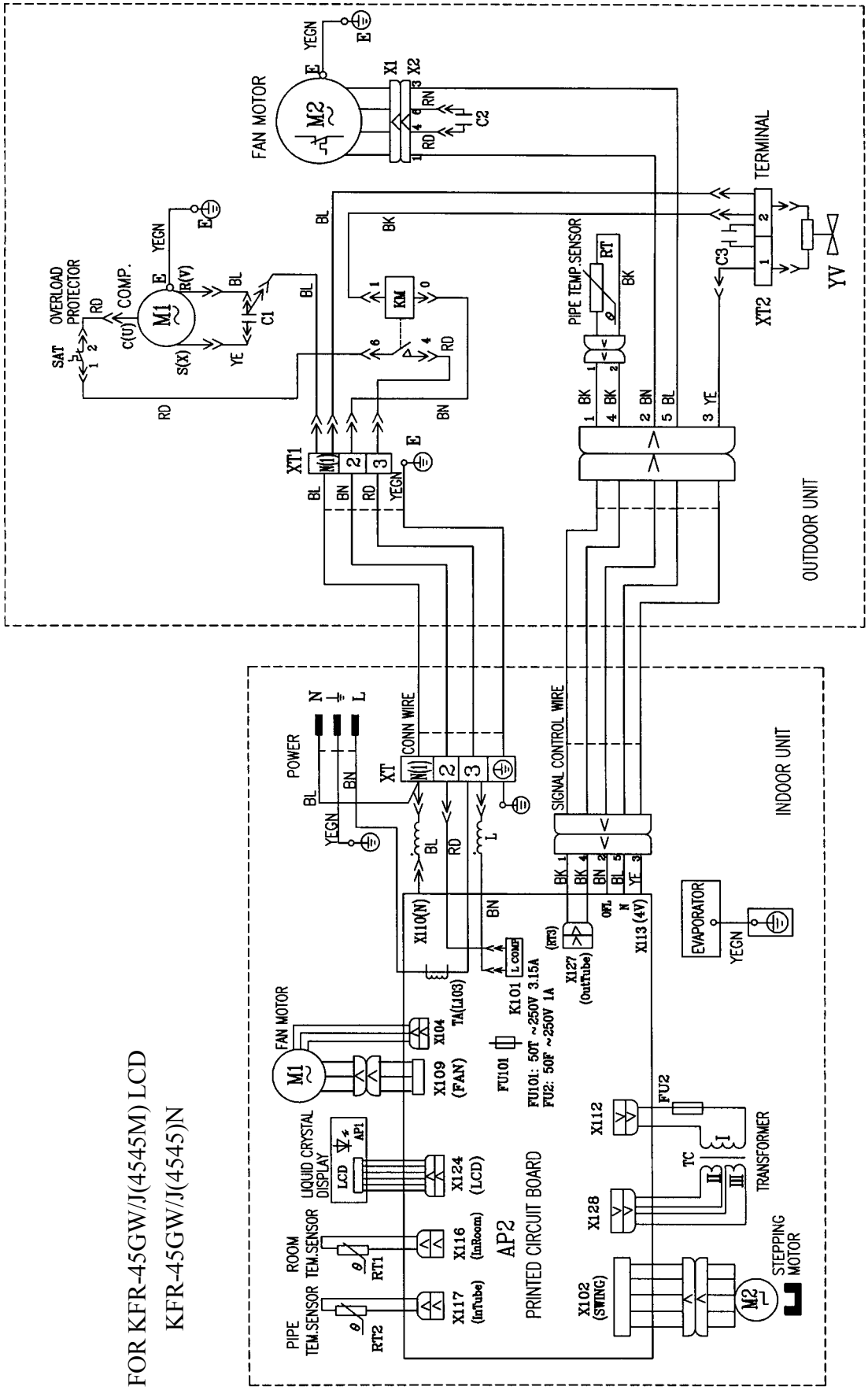

FOR KFR-45GW/J(4545M) LCD
KFR-45GW/J(4545)N

figure 2-16

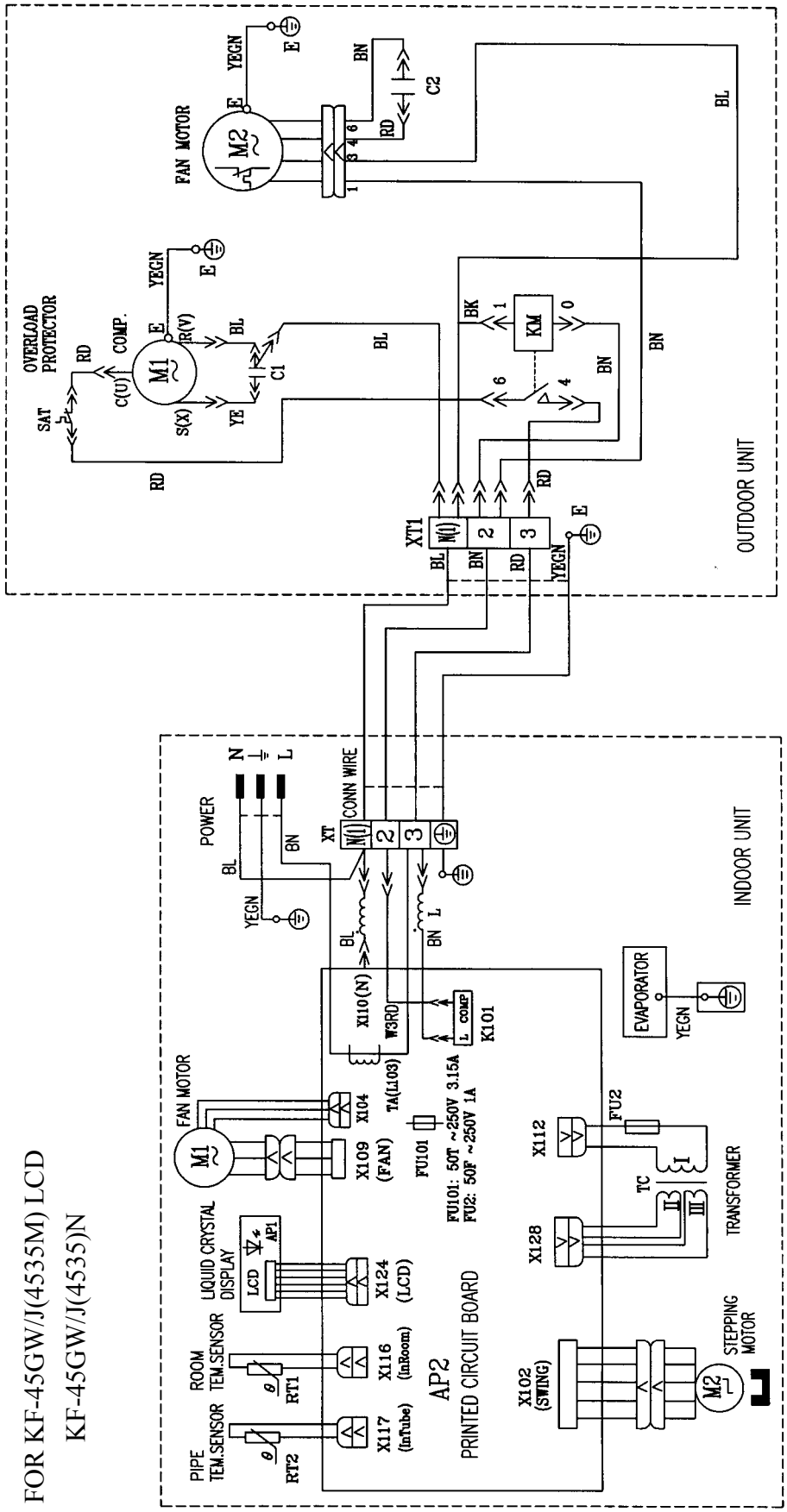

FOR KF-45GW/J(4535M) LCD
KF-45GW/J(4535)N

figure 2-17

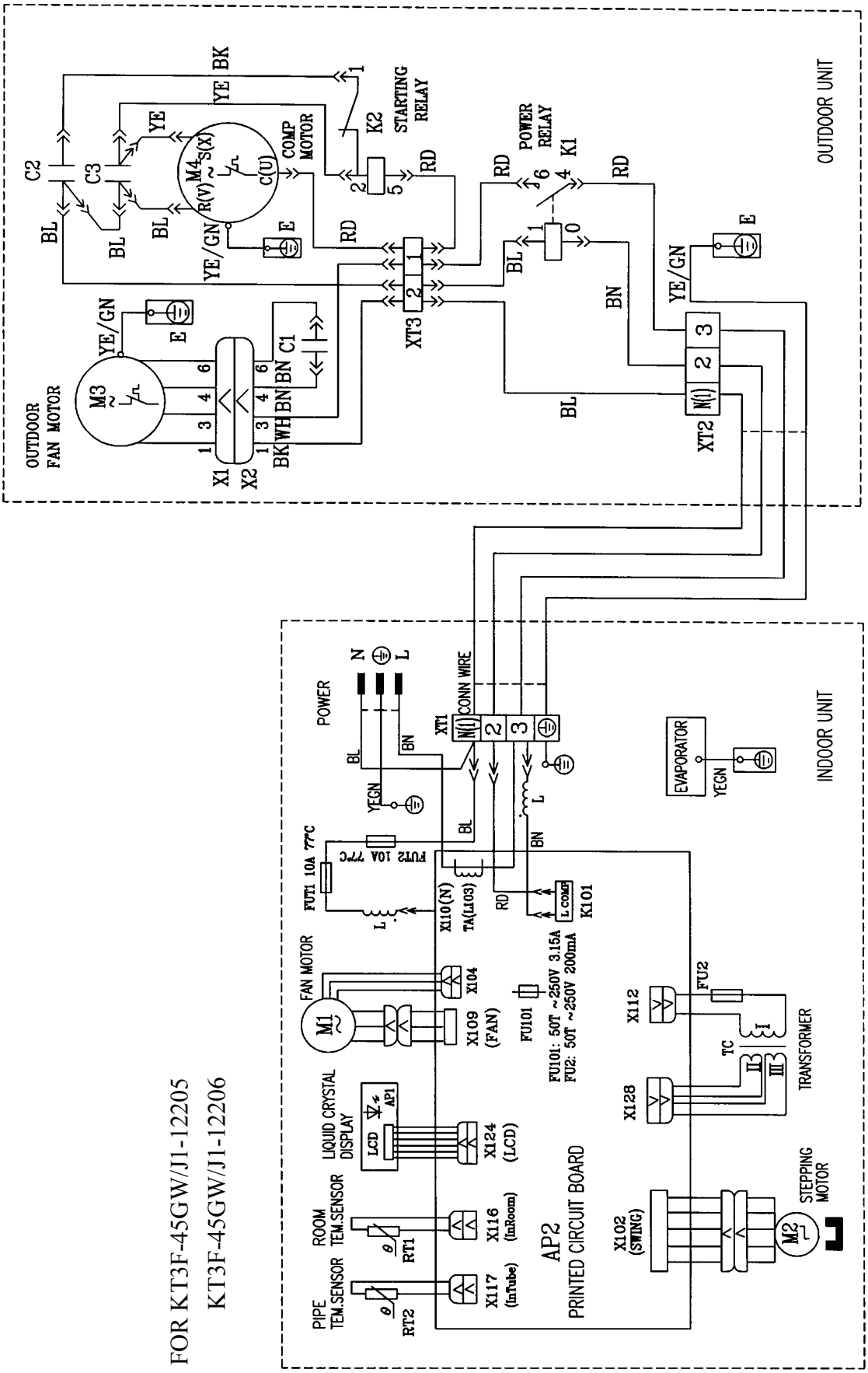

FOR KT3F-45GW/J1-12205
KT3F-45GW/J1-12206

figure 2-18

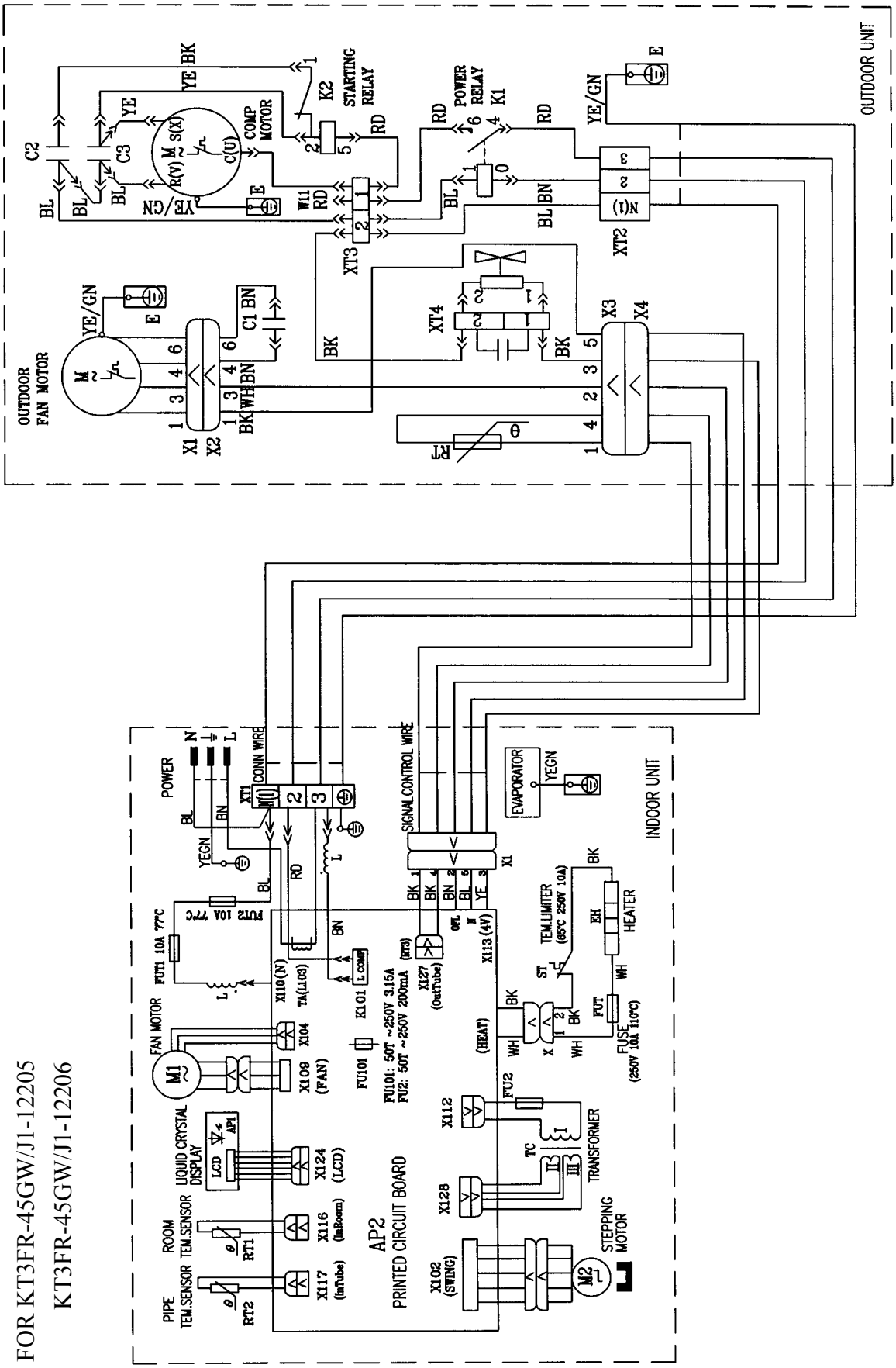
OUTDOOR UNIT
OUTDOOR FAN MOTOR
COMP MOTOR
STARTING RELAY
POWER RELAY
INDOOR UNIT
POWER
CONN WIRE
SIGNAL CONTROL WIRE
EVAPORATOR
FAN MOTOR
LIQUID CRYSTAL DISPLAY
ROOM TEM.SENSOR
PIPE TEM.SENSOR
AP2
PRINTED CIRCUIT BOARD
TEM.LIMITER
HEATER
FUSE
TRANSFORMER
STEPPING MOTOR
FOR KT3FR-45GW/J1-12205
KT3FR-45GW/J1-12206

figure 2-19

2.11 PCB function manual

5 IN I PCB function manual.

A. running mode

1. cooling 2.dehumidifying 3.heating 4.fan 5.auto

B. input parameters

1. indoor ambient temp. T_{in}
2. evaporator tube temp. T_{eva}
3. setting temp. T_{set}
4. condenser tube temp. T_{con}
5. outdoor ambient temp. T_{out}

C. targets

1. indoor motor (PG motor)
2. swing motor
3. outdoor motor (two speeds motor)
4. compressor
5. four-way reversing valve
6. electric heater
7. fresh motor
8. air cleaner

D. fundamental functions

1. cooling mode

(1) the running conditions and control measures

a. if $T_{in} \geqslant T_{set} + 1$℃, the machine runs at the cooling mode. Compressor runs, outdoor motor runs at low speed , indoor fan runs at the set fan speed.

b. if $T_{in} \leqslant T_{set} - 1$℃, the machine stops. Compressor stops first , outdoor motor stops after 15 seconds , indoor motor runs at the set fan speed.

c. if $T_{set} - 1$℃ $< T_{in} < T_{set} + 1$℃,keep the previous state.

(2) in this mode, the reversing valve is inactive, the temp. setting range is from 16~30℃.

(3) Protect function

a. anti-freezing function.

if compressor have run 6 minutes , and detect $T_{eva} < 0$℃ for continuous 3 minutes, then the compressor , outdoor fan stopped , indoor fan run at the set fan speed. After 3 minutes later, it will run at the original state if $T_{eva} \geqslant 10$℃.

b. compressor protection

Compressor's starting interval should be more than 3 minutes no matter in whatever modes and conditions. If it's plugged in first time, the compressor does not have 3 minutes delay. When compressor is started, it will not stop within 5 minutes unless it is plugged out.

c. overload protection

If it detect the system current surpass the designed 13 A for continuous 3 minutes, the machine go into fan mode, when 3 minutes passed and it detect the current no more than 13 A, it will back to original state. If it detects overloading states for 3 consecutive times within 30 minutes, the machine stops, and must be restarted by remote controller.

d. locked motor protection

if it detects no feedback from the PG motor for continuous 15 seconds , the machine stops, after 3 minutes delay, the machine backs to original state. If the motor be detected locked for 3 consecutive times, the whole machine stops and can not run again automatically.

2. dehumidifying mode

(1) the working conditions and control measures

a. if $T_{in} > T_{set}+2℃$, it is in cooling running, the indoor motor speed can be selected ,and outdoor motor run at low speed.

b. If $T_{set}-2℃ \leqslant T_{in} \leqslant T_{set}+2℃$,it goes into dehumidifying running ,the indoor motor run at the low speed, 6 minutes later the compressor stops, another 15 seconds later the outdoor fan stops and another 30 seconds later, the indoor motor stops, 3 and a half minutes later, compressor and outdoor fan run again ,indoor motor runs at the low speed, then the machine cycle the above procedures repeatedly. outdoor motor runs at the low speed.

c. If $T_{in} < T_{set}-2℃$, compressor ,outdoor motor and indoor motor stop.

(2) in this mode, the reversing valve is inactive , the temp. setting range is 16~30℃.

(3) Anti-freezing protection.

If $T_{indoor} > T_{set} + 2℃$, it goes into cooling running , anti-freezing function is same with cooling mode, but the compressor must stops for 4 minutes. when it goes into dehumidifying mode, compressor runs 6 minutes , if it detects $T_{eva} < 0℃$,compressor and outdoor motor stop, indoor motor runs at low speed ,after 3 minutes delay ,and $T_{eva} \geqslant 10℃$,it will be back to its original state.

(4) Overload is same as the one in cooling mode.

3. heating mode

(1) the working conditions and control measures

a. If $T_{in} \leqslant T_{set}+2℃$, it goes into heating mode, reversing valve, compressor and outdoor motor all work in the same time, indoor fan will run at the same procedures with anti cool air function.

b. If $T_{in} \geqslant T_{set} + 4℃$, compressor stops first, 15 seconds late, outdoor motor stops ,but reversing valve keeps working, indoor motor run at the procedures of blowing surplus heat.

d. if $T_{set} + 2℃ < T_{indoor} < T_{set} + 4℃$, keep the previous running state.

e. If $T_{outdoor} \leqslant 3℃$, outdoor runs at high speed, if $T_{outdoor} \geqslant 5℃$,outdoor motor runs at low speed .if $3℃ \leqslant T_{outdoor} \leqslant 5℃$,keep the previous running state.

(2) in this mode, the temperature setting range is from 16~30℃.

(3) The working conditions of auxiliary electric heater.

In heating mode, when compressor is working, indoor motor runs at high speed and middle speed . if it detect T_{eva}<50℃ for continuous 8 seconds and T_{indoor} ≤25℃, electric heater will work ,if compressor stop or indoor motor runs at low speed or T_{eva} ≥ 54℃or T_{indoor} ≥ 28℃ or 10 seconds before defrosting , the electric heater will stop.

(4) protections

a .anti cool air

when the machine starts heating and T_{eva} ≥ 22℃, indoor motor runs at low speed, and swing motor makes the louver at the horizontal position(in Bird line, it will swing to the maximum air volume position), if T_{eva}≥ 40℃ or compressor have run 2 minutes ,indoor motor and swing motor will run at the set speed .

b .anti high temp.

in heating mode, if it detect T_{eva} ≥ 56℃(58℃ can be selected), outdoor motor will stop(in this period it will not detect the defrosting temp.). if T_{eva}≤52℃, outdoor motor will be back running (it will not detect defrosting temp. in the first 5 seconds).

c. blowing surplus heat

In heating mode, when set temp is reached ,comp. stops first,15 seconds later outdoor fan stops, Indoor motor blows 90 seconds (60 seconds can be selected) at low speed ,swing motor makes the louver at the horizontal position(in Bird line,it will swing to the maximum air volume postion).

d. Compressor's protection is same with the one in cooling mode.

e. Overload protection

If it detects that the system current surpassed the designed 13 A for continuous 3 seconds, compressor, electric heater and outdoor motor stop , indoor motor runs the same procedures as the blowing surplus heat condition. After 3 minutes and current no more than 13 A, the machine will be back to its original state, indoor motor runs as the anti cool air condition. If it detects overloading state for 3 consecutive times within 30 minutes, the machine stops, and it must be restarted by remote controller.

f. locked motor protection

if it detects no feedback from the PG motor for continuous 15 seconds , compressor , outdoor motor, indoor motor and electric heater will stop, 3 minutes late, the machine will be back to its original state, indoor motor runs as the anti cool air condition. If the motor was locked for 3 consecutive times, the whole machine stops and can not run again automatically.

g. defrosting conditions and procedures

In heating mode, if compressor has run 44 minutes (in its first 6 minutes it will not detect defrosting temp.) , and it has detected T_{con}≤-4℃ for continuous 1 minutes , it begins to defrost , electric heater will stop for 10 seconds (even if electric heater is not working) , then indoor motor stops , reversing valve becomes inactive in another 2 seconds, another 2 seconds later, outdoor motor stops, when T_{con}≥ 10℃or defrosting lasts for 10 minutes , outdoor motor and reversing valve

becomes active , indoor motor will run as the anti cool air condition, then it cycles again, recalculates the compressor's running time again. (In this period , if any protection works ,and after the machine is back to work , it will re-start defrosting state. it will not detect outdoor tube temp when compressor's in its first 6 minutes running)

h.noise lowering protection

When you use RUN/STOP button to switch off the machine, reversing valve will become inactive in 2 minutes.

4. AUTO mode

(1) in AUTO mode, standard cooling T_{set}=25℃, standard heating T_{set}=20℃

(2) working procedures

a. If $T_{indoor} \geqslant T_{set}$ + 1℃, select cooling mode, from this time, the set temp. is 25℃. If $T_{indoor} \leqslant T_{set}$-1℃, compressor and outdoor motor stop, indoor motor runs at the set speed, if T_{set}-1℃< T_{indoor} < T_{set} +1℃, keep the original state.

b. If $T_{indoor} \leqslant T_{set}$+2℃, select heating mode, from this time, the set temp. is 20℃, if $T_{indoor} \geqslant T_{set}$ + 4℃, compressor stops first, outdoor motor stops 15 seconds later , reversing valve is always active, indoor motor runs as the blowing surplus heat condition. If T_{set} +2℃< T_{indoor} < T_{set} +4℃, keeps the original state.

Cooling & heating AUTO mode: in AUTO mode, when the machine is switched from heating mode to the other modes, reversing valve becomes inactive in 90 seconds.

Cooling only AUTO mode: there is no heating function in this mode.

(3) protections

It is same as the one in cooling or heating mode, there is only one exception , the compressor doesn't have at least 5 minutes protection.

E. other controls

1. SWING mode

a. When it is active, the louver returns to position O, close the air outlet.

b. When machine works, it turns to the max. Air output position D, then returns back to position L to stand by (position L is the horizontal place mentioned before).

c. In swing state, the louver swings between position L and position D.

d. When the machine is switched off, it is back to position O.

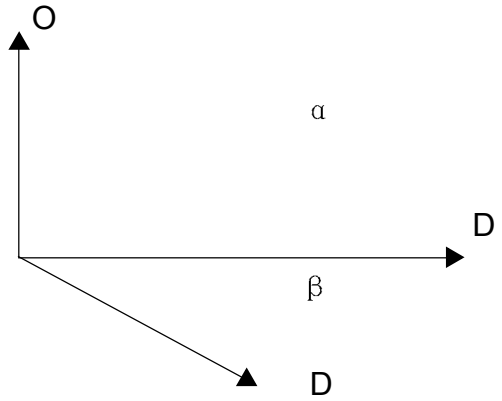

In Gree 2000 line and new 24000BTU line , α =93, β =45
In Bird line, α =80, β =25
Attention : in Bird line, the louver will stop at position D . in other lines, the louver will stop at position L)

Bird line:
a. When it is active, the louver returns to position O, close the air outlet.
b. When machine works, it turns 80 degrees to the max. Air output position D and stands by.
c. In swing state, the louver swings between position L(25) and position D.
d. When the machine is switched off, it is back to position O.

2. beeper
a. When PCB becomes active or receives the signal from the remote controller , the beeper will beep.
b. If thermostat is open-circuited or short-circuited, when you press the TEST button, the beeper will alarm at the frequency 2HZ.
3. indication lamps
it flashes when defrosting begin.
4. multi-step switch .
a. If the switch is in AUTO position, the machine will run at the AUTO mode, if there is a signal from remote controller, it will run according to the signal .
b. If the switch is in TEST position, the machine will run at the COOL mode, indoor motor will run at high speed , swing motor will run according to SWING mode. If there is a signal from remote controller, it will run according to the signal .if the thermostat is open-circuited or short-circuited , the beeper will alarm at the frequency 2 HZ .
c. If the switch is in RUN position , the machine will run according to the remote signal.
d. If the switch is in STOP position, the machine will stop.
5. SLEEP mode.
a. In cooling or dehumidifying mode, 1 hour after you set the sleep timer ,T_{set} will add 1℃automatically, another 1 hour, another 1℃ will be added.
b. In heating mode, 1 hour after you set the sleep timer, T_{set} will lower 1℃automatically, another 1 hour, another 1℃will be lowered .
6. Automatic fan speed .
a. In cooling mode, if $T_{indoor} > T_{set} + 4$℃ high speed
$T_{set} + 2$℃$\leqslant T_{indoor} \leqslant T_{set} + 4$℃ middle speed
$T_{indoor} < T_{set} + 2$℃ low speed

b. b. In heating mode, if $T_{indoor} \leqslant T_{set} - 1$℃ high speed

T_{set} -1℃< T_{indoor} <T_{set} +1℃ middle speed

T_{indoor} ⩾ T_{set} + 2℃ low speed

F. Fresh air function.

1.there are two fresh air modes .

a.fresh air 2

fresh air motor will work 1 hour, then rest 1 hour, then cycle again.

b.fresh air 1

press the button AIR on the remote controller to select fresh air 1 function, the swing motor keeps running till you give a signal to change it.

G. air cleaning

In air cleaning mode, air cleaner works while indoor fan runs and air cleaner stops while indoor fan stops.

The speeds of the wind of all types of the air-conditioner are as below:

000: 900,850, 800, 700 (RPM);

001: 1000, 900, 850, 700(RPM);

010: 1050, 950, 900, 700(RPM);

011: 1100, 1000, 950, 700(RPM);

100: 1200, 1100, 1000, 700(RPM);

101: 1250, 1100, 1050, 700(RPM);

111: 1400, 1200, 1100, 700(RPM);

3.FENGYUN Series

3.1 Summary.

figure 3-1

MODEL		NOTE
KF-50GW/A10 KF-60GW/A10	KFR-50GW/A10 KFR-60GW/A10	CE STANDARD 1Ph 220-230V~50Hz R22
KF-50GW/NA1 KF-60GW/NA10	KFR-50GW/NA1 KFR-60GW/NA10	CE STANDARD 1Ph 220-230V~50Hz R407C
KF-50GW/A10-12206 KFR-50GW/A10-12206 GSW24-22L/A GSW24-22R/A		1Ph 220V~60Hz R22
KT3F-60GW/A10 KT3FR-60GW/A10		TROPICAL AIR-CONDITIONER 1Ph 220V~50Hz R22
KT3F-60GW/A10-12206 KT3FR-60GW/A10-12206		TROPICAL AIR-CONDITIONER 1Ph 220V~60Hz R22

3.2 Technical specifications.

Table 3-1

Model Content			KF-50GW/A10	KFR-50GW/A10	
Function			Cooling	Cooling	Heating
Power supply			1Ph-220V-50Hz		
Capacity		W	5000	5000	6000
Rated input		W	1960	1960	2160
Rated current		A	9.0	9.0	10
Air flow		m^3/h	720		
Dehumidifying volume		L/h	2.0		
C.O.P(W/W)			2.55	2.55	2.77
Indoor unit	Model		KF-50G/A10	KFR-50G/A10	
	Motor fan speed(r/min)		1350/1200/1100		
	Output power(w)		20		
	Fan type/piece		Cross flow fan-1		
	Diameter-length(mm)		ϕ 90 × 723		
	Evaporator		Aluminum fin-copper tube		
	Row-fin distance(mm)		3-1.5		
	Working area(mm^2)		733 × 330		
	Swing motor		MP24EA		
	Input/Power(W)		50		
	Fuse(A)		Controller 3.15A Transformer 0.2A		
	Working capacitor(μ F)		1		
	Noise(dB(A))		⩽ 46		
	Dimension (width-height-depth)(mm)		907 × 290 × 195		
	Net weight(Kg)		12		
Outdoor unit	Model		KF-50W/A10	KFR-50W/A10	
	Input power	W	1940	1940/2140	
	Current	A	8.71	8.71/9.71	
	L.R.A.	A	49		
	Throttling method		Capillary		
	Compressor		SHW33TC4-U		
	Power	W	1990		
	Protector		External overload protection		
	Starting method		By capacitor		
	Working temp.		Exhaust temperature ⩽ 115℃		
	Condenser		Aluminum-copper		
	Pipe-diameter		ϕ 9.52		
	Working area(m^2)		0.65		
	Fan motor speed(rpm)		780		
	Type-piece		Axial fan-1		
	Diameter(mm)		ϕ 460		
	Defrosting method		Auto defrost		
	Noise(dB(A))		58		
	Dimension(mm)(width-height-depth)		950 × 710 × 410		
	Net weight(Kg)		59		
	Refrigerant charge(kg)		R22/1.90	R22/1.95	
Connecting pipe	Outer diameter	Liquid pipe	ϕ 1/4"		
		Gas pipe	ϕ 1/2"		
	Max distance	Height(m)	5		
		Length(m)	10		

The technical date are subject to change without notice .Please refer to the nameplate of the unit.

Table 3-2

Model / Content			KF-60GW/A10	KFR-60GW/A10	
Function			Cooling	Cooling	Heating
Power supply			1Ph-220V-50Hz		
Capacity		W	6000	6000	7000
Rated input		W	2600	2600	2680
Rated current		A	11.3	11.3	12
Air flow		M^3/h	720		
Dehumidifying volume		L/h	2.4		
EER(W/W)			2.3	2.3	2.61
Indoor unit	Model		KF-60G/A10	KFR-60G/A10	
	Motor fan speed(r/min)		1400/1200/1100		
	Output power(w)		20		
	Fan type/piece		Cross flow fan-1		
	Diameter-length(mm)		ϕ 90 × 723		
	Evaporator		Aluminum fin-copper tube		
	Row-fin distance(mm)		3-1.5		
	Working area(mm^2)		733 × 330		
	Swing motor		MP24EA		
	Input/Power(W)		50		
	Fuse(A)		Controller 3.15A Transformer 0.2A		
	Working capacitor(μF)		1		
	Noise(dB(A))		⩽ 48		
	Dimension(width-height-depth)(mm)		907 × 290 × 195		
	Net weight(Kg)		12		
Outdoor unit	Model		KF-60W/A10	KFR-60W/A10	
	Input power	W	2530	2530/2630	
	Current	A	11.0	11.0/11.7	
	L.R.A.	A	60		
	Throttling method		Capillary		
	Compressor		SHV33YE6UU (revolving type)		
	Power	W	2335		
	Protector		External overload protection		
	Starting method		By capacitor		
	Working temp.		Exhaust temperature ⩽ 115℃		
	Condenser		Aluminum-copper		
	Pipe-diameter		ϕ 9.52		
	Working area(m^2)		0.65		
	Fan motor speed(rpm)		815	815	
	Type-piece		Axial fan-1		
	Diameter(mm)		ϕ 460		
	Defrosting method		Auto defrost		
	Noise(dB(A))		59		
	Dimension(mm)(width-height-depth)		950 × 710 × 410		
	Net weight(Kg)		59		
	Refrigerant charge(kg)		R22/1.6	R22/2.0	
Connecting pipe	Outer diameter	Liquid pipe	ϕ 3/8"		
		Gas pipe	ϕ 5/8"		
	Max distance	Height(m)	5		
		Length(m)	10		

The technical date are subject to change without notice .Please refer to the nameplate of the unit.

Table 3-3

Model			KF-50GW/NA1	KFR-50GW/NA1	
Function			Cooling	Cooling	Heating
Power supply			1Ph-220V-50Hz		
Capacity		W	5000	5000	6200
Rated input		W	2400	2400	2650
Rated current		A	9.0	9.0	10
Air flow		M^3/h	720		
Dehumidifying volume		L/h	2.0		
C.O.P(W/W)			2.08	2.08	2.34
Indoor unit	Model		KF-50G/NA1	KFR-50G/NA1	
	Motor fan speed(r/min)		1350/1200/1100		
	Output power(W)		20		
	Fan type/piece		Cross flow fan-1		
	Diameter-length(mm)		ϕ 90 × 723		
	Evaporator		Aluminum fin-copper tube		
	Row-fin distance(mm)		3-1.5		
	Working area(mm^2)		733 × 330		
	Swing motor		MP24EA		
	Input/Power(W)		50		
	Fuse(A)		Controller 3.15A Transformer 0.2A		
	Working capacitor(μF)		1		
	Noise(dB(A))		⩽ 46		
	Dimension(width-height-depth)(mm)		907 × 290 × 195		
	Net weight(Kg)		12		
Outdoor unit	Model		KF-50W/NA1	KFR-50W/NA1	
	Input power	W	2380	2380/2630	
	Current	A	8.7	8.7/9.7	
	L.R.A.	A	47		
	Throttling method		Capillary		
	Compressor		C-2RN170H5U		
	Power	W	2200		
	Protector		External overload protection		
	Starting method		By capacitor		
	Working temp.		Exhaust temperature ⩽ 115℃		
	Condenser		Aluminum-copper		
	Pipe-diameter		ϕ 9.52		
	Working area(m^2)		0.65		
	Fan motor speed(rpm)		780		
	Type-piece		Axial fan-1		
	Diameter(mm)		ϕ 460		
	Defrosting method		Auto defrost		
	Noise dB(A)		58		
	Dimension(mm)(width-height-depth)		950 × 710 × 410		
	Net weight(kg)		59		
	Refrigerant charge (kg)		R407C/2.0		
Connecting pipe	Outer diameter	Liquid pipe	ϕ 1/4"		
		Gas pipe	ϕ 1/2"		
	Max distance	Height(m)	5		
		Length(m)	10		

The technical date are subject to change without notice .Please refer to the nameplate of the unit.

Table 3-4

Model			KF-60GW/NA10	KFR-60GW/NA10	
Function			Cooling	Cooling	Heating
Power supply			1Ph-220V-50Hz		
Capacity		W	6000	6000	7000
Rated input		W	2600	2600	2600
Rated current		A	11.3	11.7	10
Air flow		M^3/h	720		
Dehumidifying volume		L/h	2.0		
C.O.P(W/W)			2.08	2.08	2.34
Indoor unit	Model		KF-60G/NA10	KFR-60G/NA10	
	Motor fan speed(r/min)		1400/1200/1100		
	Output power(W)		20		
	Fan type/piece		Cross flow fan-1		
	Diameter-length(mm)		ϕ 90 × 723		
	Evaporator		Aluminum fin-copper tube		
	Row-fin distance(mm)		3-1.5		
	Working area(mm^2)		733 × 330		
	Swing motor		MP24EA		
	Input/Power(W)		50		
	Fuse(A)		Controller 3.15A Transformer 0.2A		
	Working capacitor(μF)		1		
	Noise(dB(A))		⩽ 48		
	Dimension(width-height-depth)(mm)		907 × 290 × 195		
	Net weight(Kg)		12		
Outdoor unit	Model		KF-60W/NA1	KFR-60W/NA10	
	Input power	W	2580	2580/2580	
	Current	A	11.0	11.4/11.7	
	L.R.A.	A	64		
	Throttling method		Capillary		
	Compressor		C-2RN190H5B (revolving)		
	Power	W	2420		
	Protector		External overload protection		
	Starting method		By capacitor		
	Working temp.		Exhaust temperature ⩽ 115℃		
	Condenser		Aluminum-copper		
	Pipe-diameter		ϕ 9.52		
	Working area(m^2)		0.65		
	Fan motor speed(rpm)		815		
	Type-piece		Axial fan-1		
	Diameter(mm)		ϕ 460		
	Defrosting method		Auto defrost		
	Noise dB(A)		59		
	Dimension(mm)(width-height-depth)		950 × 710 × 410		
	Net weight(kg)		59		
	Refrigerant charge (kg)		R407C/2.0	R407C/2.2	
Connecting pipe	Outer diameter	Liquid pipe	ϕ 3/8”		
		Gas pipe	ϕ 5/8”		
	Max distance	Height(m)	5		
		Length(m)	10		

The technical date are subject to change without notice .Please refer to the nameplate of the unit.

Table 3-5

Model			GSW24-22L/A	GSW24-22R/A	
Function			Cooling	Cooling	Heating
Power supply			1Ph-220V-60Hz		
Capacity		W	6000	6000	6800
Rated input		W	2600	2600	2500
Rated current		A	12.8	12.8	12.6
Air flow		M^3/h	720		
Dehumidifying volume		L/h	2.4		
C.O.P(W/W)			2.3	2.3	2.72
Indoor unit	Model		GSW24-22L/A(I)	GSW24-22R/A(I)	
	Motor fan speed(r/min)		1400/1200/1100		
	Output power(W)		20		
	Fan type/piece		Cross flow fan-1		
	Diameter-length		ϕ 90 × 723		
	Evaporator		Aluminum fin-copper tube		
	Row-fin distance(mm)		3-1.5		
	Working area(mm^2)		733 × 330		
	Swing motor		MP24EA		
	Input/Power(W)		50		
	Fuse(A)		Controller 3.15A Transformer 0.2A		
	Working capacitor(μF)		1		
	Noise(dB(A))		⩽ 48		
	Dimension(width-depth-height)(mm)		907 × 290 × 195		
	Net weight(Kg)		12		
Outdoor unit	Model		GSW24-22L/A(O)	GSW24-22R/A(O)	
	Input power	W	2580	2580/2570	
	Current	A	12.5	12.5/12.3	
	L.R.A.	A	61.6		
	Throttling method		Capillary		
	Compressor		CIDQ-0200-PFV-506		
	Power	W	2690		
	Protector		External overload protection		
	Starting method		By capacitor		
	Working temp.		Exhaust temperature ⩽ 115℃		
	Condenser		Aluminum-copper		
	Pipe-diameter		ϕ 9.52		
	Working area(m^2)		0.65		
	Fan motor speed(rpm)		815	815	
	Type-piece		Axial fan-1		
	Diameter(mm)		ϕ 460		
	Defrosting method		Auto defrost		
	Noise dB(A)		59		
	Dimension(mm)(width-height-depth)		950 × 710 × 410		
	Net weight(kg)		59		
	Refrigerant charge (kg)		R22 1.6	R22 2.0	
Connecting pipe	Outer diameter	Liquid pipe	ϕ 3/8”		
		Gas pipe	ϕ 5/8”		
	Max distance	Height(m)	5		
		Length(m)	10		

The technical date are subject to change without notice .Please refer to the nameplate of the unit.

Table 3-6

Model			KF-50GW/A10-12206	KFR-50GW/A10-12206	
Function			Cooling	Cooling	Heating
Power supply			1Ph-220V-60Hz		
Capacity		W	5000	5000	6000
Rated input		W	2000	2000	21650
Rated current		A	9.0	9.0	2200
Air flow		M^3/h	720		
Dehumidifying volume		L/h	2.0		
C.O.P(W/W)			2.55	2.55	2.787
Indoor unit	Model		KF-50G/A10-12206	KFR-50G/A10-12206	
	Motor fan speed(r/min)		1350/1200/1100		
	Output power(W)		20		
	Fan type/piece		Cross flow fan-1		
	Diameter-length(mm)		ϕ 90 × 723		
	Evaporator		Aluminum fin-copper tube		
	Row-fin distance(mm)		3-1.5		
	Working area(mm^2)		733 × 330		
	Swing motor		MP24EA		
	Input/Power(W)		50		
	Fuse(A)		Controller 3.15A Transformer 0.2A		
	Working capacitor(μF)		1		
	Noise(dB(A))		⩽ 48		
	Dimension(width-height-depth)(mm)		907 × 290 × 195		
	Net weight(Kg)		12		
Outdoor unit	Model		KF-50G/A10-12206	KFR-50W/A10-12206	
	Input power	W	1950	1950/2150	
	Current	A	8.71	8.71/9.71	
	L.R.A.	A	47		
	Throttling method		Capillary		
	Compressor		SHZ73LC2-U		
	Power	W	1960		
	Protector		External overload protection		
	Starting method		By capacitor		
	Working temp.		Exhaust temperature ⩽ 115℃		
	Condenser		Aluminum-copper		
	Pipe-diameter		ϕ 9.52		
	Working area(m^2)		0.65		
	Fan motor speed(rpm)		780		
	Type-piece		Axial fan-1		
	Diameter(mm)		ϕ 460		
	Defrosting method		Auto defrost		
	Noise dB(A)		58		
	Dimension(mm)(width-height-depth)		950 × 710 × 410		
	Net weight(kg)		59		
	Refrigerant charge (kg)		R22 1.9		
Connecting pipe	Outer diameter	Liquid pipe	ϕ 1/4”		
		Gas pipe	ϕ 1/2”		
	Max distance	Height(m)	5		
		Length(m)	10		

The technical date are subject to change without notice .Please refer to the nameplate of the unit.

Table 3-7

Model			KT3F-60GW/A10-12206	KT3FR-60GW/A10-12206
Function			COOL	COOL/HEAT
Power supply			1N-220V-60Hz	
Capacity(W)			6000	6000/6500
Rated input(W)			2500	2500/2400
Rater current(A)			11.4	11.4/10.9
Air flow(m^3/h)			720	
Dehumidifying volume(L/h)			2.4	
EER(W/W)			2.4	2.4/2.7
Indoor unit	Model		KT3F-60G/A10-12206	KT3FR-60G/A10-12206
	Motor fan speed(rpm)		1400/1200/1100	
	Output power(W)		20	
	Fan type/piece		Cross flow fan-1	
	Diameter-length		ϕ 90 × 723	
	Evaporator		Aluminum fin-copper tube	
	Row-fin distance(mm)		3-1.5	
	Working area(m^2)		733 × 330	
	Swing motor		MP24EA	
	Input/Power(W)		50	
	Fuse(A)		Controller 3.15A Transformer 0.2A	
	Working capacitor(μF)		1	
	Noise(dB(A))		⩽ 48	
	Dimension(width-depth-height)(mm)		907 × 290 × 195	
	Net weight(Kg)		12	
Outdoor unit	Model		KT3F-60W/A10-12206	KT3FR-60W/A10-12206
	Input power(W)		2450	2450/2350
	Current(A)		11.1	11.1/10.7
	L.R.A.(A)		67.7	
	Throttling method		Capillary	
	Compressor model		CI24KQ-PFV-240BN	
	Compressor power(W)		2870	
	Protector		External overload protection	
	Starting method		By capacitor	
	Working temp.		Exhaust temperature ⩽ 115℃	
	Condenser		Aluminum-copper	
	Pipe-diameter		ϕ 9.52	
	Row-fin distance(mm)		2/1.8	
	Working area(m^2)		0.65	
	Fan motor power(W)/speed(rpm)		815	
	Type-piece		Axial fan-1	
	Diameter(mm)		ϕ 460	
	Defrosting method		Auto defrost	
	Noise (dB(A))		59	
	Dimension(mm)(width-height-depth)		950 × 710 × 410	
	Net weight(kg)		59	
	Refrigerant charge (kg)		R22/2.0	
Connecting pipe	Length(m)		5	
	Outer diameter	Liquid pipe	ϕ 3/8”	
		Gas pipe	ϕ 5/8”	
	Max distance	Height(m)	5	
		Length(m)	10	

The technical date are subject to change without notice .Please refer to the nameplate of the unit.

Table 3-8

Model			KT3F-60GW/A10	KT3FR-60GW/A10
Function			COOL	COOL/HEAT
Power supply			1Ph-220V-50Hz	
Capacity(W)			6000	6000/6500
Rated input(W)			2500	2500/2400
Rater current(A)			11.4	11.4/10.9
Air flow(m^3/h)			720	
Dehumidifying volume(L/h)			2.4	
EER(W/W)			2.4	2.4/2.7
Indoor unit	Model		KT3F-60G/A10	KT3FR-60G/A10
	Motor fan speed(rpm)		1400/1200/1100	
	Output power(W)		20	
	Fan type/piece		Cross flow fan-1	
	Diameter-length		ϕ 90 × 723	
	Evaporator		Aluminum fin-copper tube	
	Row-fin distance(mm)		3-1.5	
	Working area(m^2)		733 × 330	
	Swing motor		MP24EA	
	Input/Power(W)		50	
	Fuse(A)		Controller 3.15A Transformer 0.2	
	Working capacitor(μ F)		1	
	Noise(dB(A))		⩽ 48	
	Dimension(width-height-depth)(mm)		907 × 290 × 195	
	Net weight(Kg)		12	
Outdoor unit	Model		KT3F-60W/A10	KT3FR-60W/A10
	Input power (W)		2450	2450/2350
	Current (A)		11.1	11.1/10.7
	L.R.A. (A)		67.7	
	Throttling method		Capillary	
	Compressor model		C124KQ-PFV-240BN	
	Compressor power(W)		2870	
	Protector		External overload protection	
	Starting method		By capacitor	
	Working temp.		Exhaust temperature ⩽ 115℃	
	Condenser		Aluminum-copper	
	Pipe-diameter		ϕ 9.52	
	Row-fin distance(mm)		2/1.8	
	Working area(m^2)		0.65	
	Fan motor power(W)/speed(rpm)		815	
	Type-piece		Axial fan-1	
	Diameter(mm)		ϕ 460	
	Defrosting method		Auto defrost	
	Noise (dB(A))		59	
	Dimension(width-height-depth)(mm)		950 × 710 × 410	
	Net weight(kg)		59	
	Refrigerant charge (kg)		R22/2.0	
Connecting pipe	Length(m)		5	
	Outer diameter	Liquid pipe	ϕ 3/8”	
		Gas pipe	ϕ 5/8”	
	Max distance	Height(m)	5	
		Length(m)	10	

The technical date are subject to change without notice .Please refer to the nameplate of the unit.

3.3 Performance curve

The change relation between low pressure,operation current and temp.

Cooling operation condition:I n testing, indoor and outdoor have same work condition.

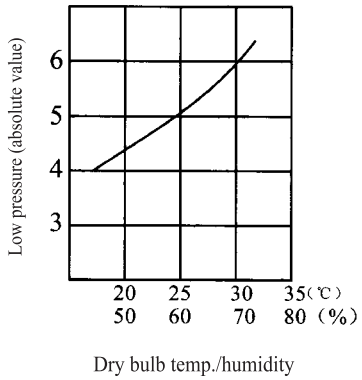

(a)

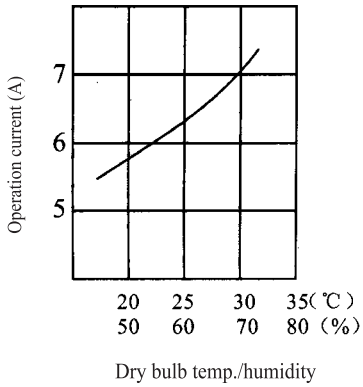

(b)

Heating operation

Indoor work condition: dry bulb temp.21℃, wet bulb temp. 15.5℃.

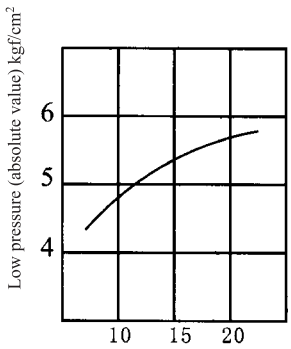

(c)

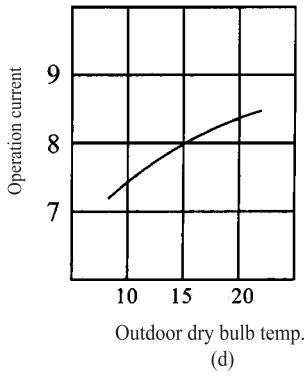

(d)

figure 3-2

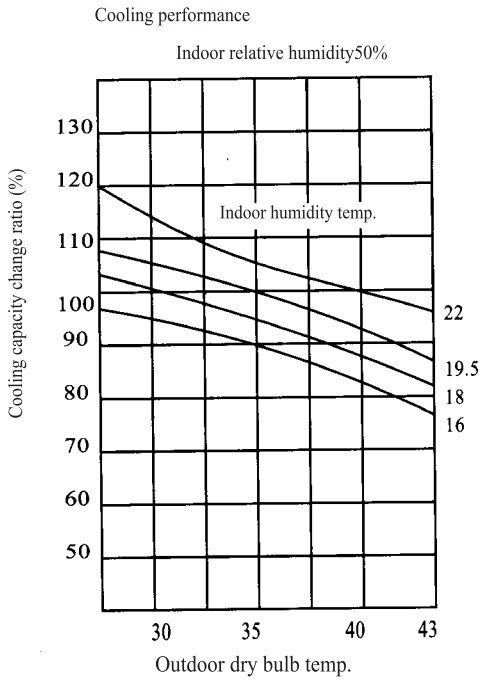

(a)

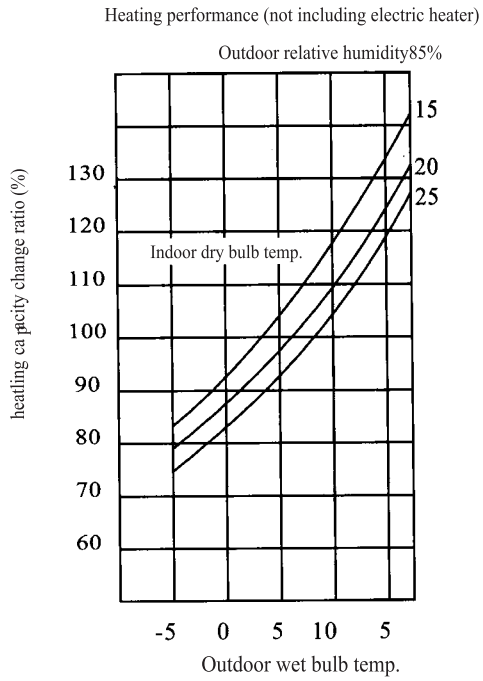

(b)

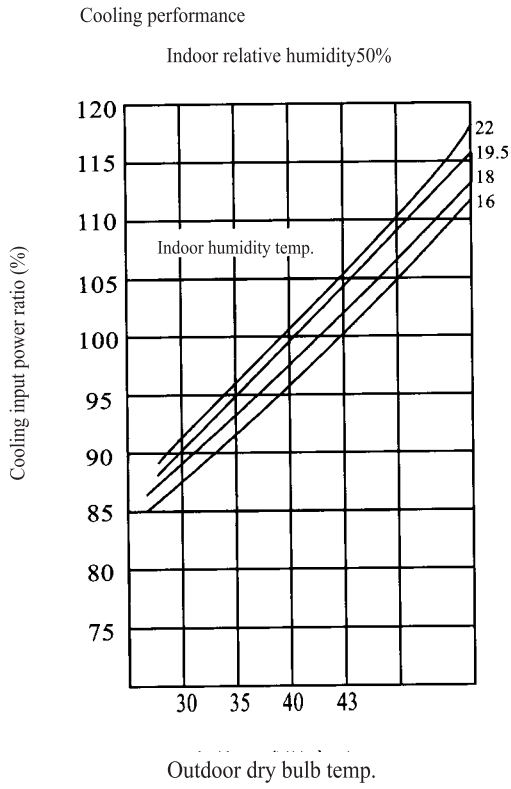

(c)

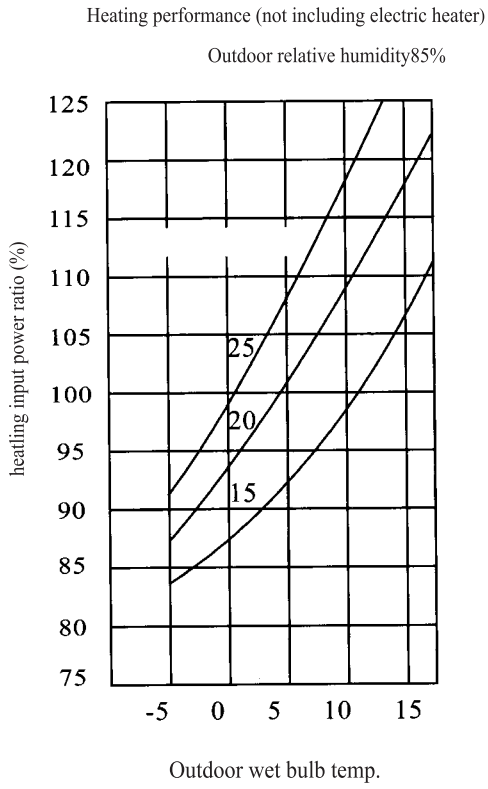

(d)

figure 3-3

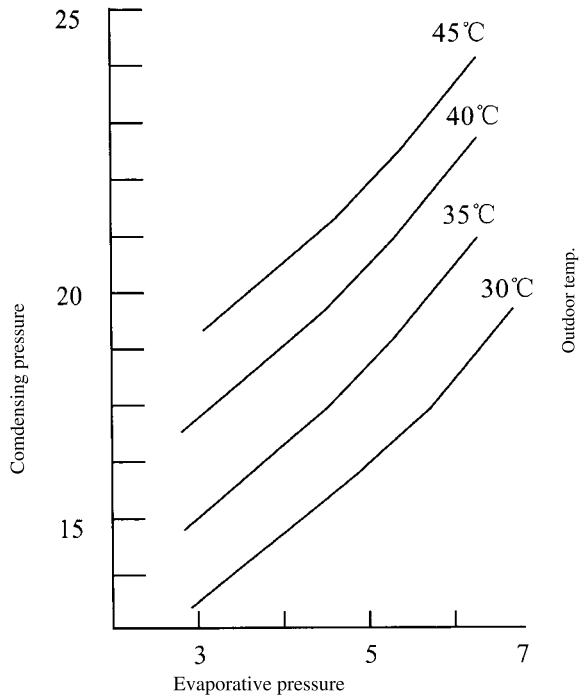

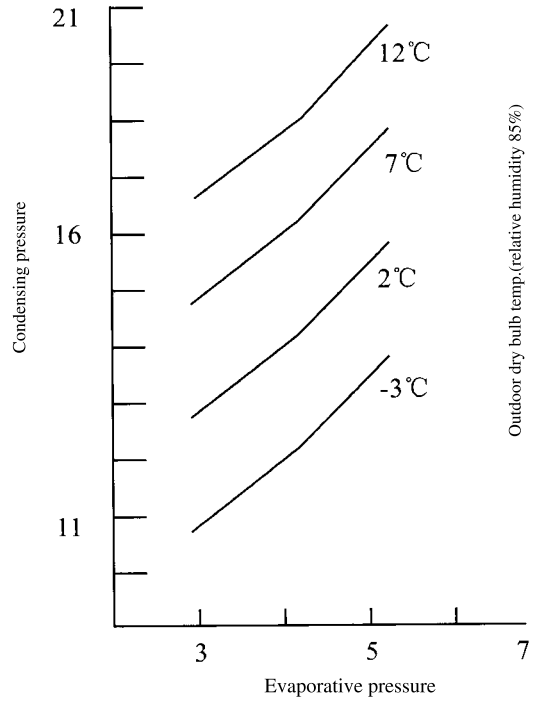

The affection to the charging quantity by pressure under cooling work condition.
The affection to the charging quantity by pressure under cooling work condition.

(Indoor work condition:dry bulb 27℃ ,wet bulb 19.5℃) (Indoor work condition:dry bulb 21℃)

(e) (f)

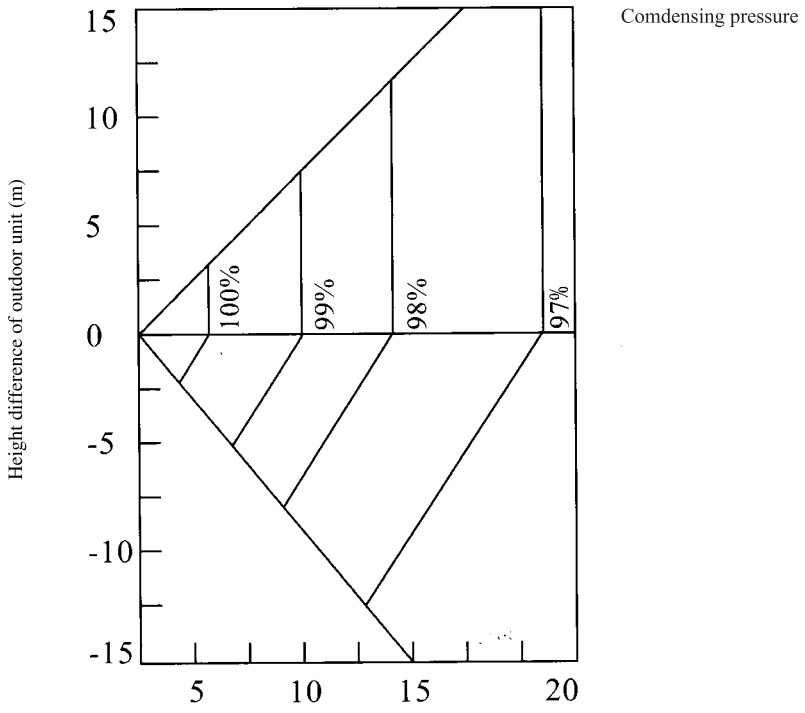

The length of connection pipe
Cooling capacity vary with the length of connection pipe

figure 3-4

3.4 Outlines and dimensions of indoor unit.

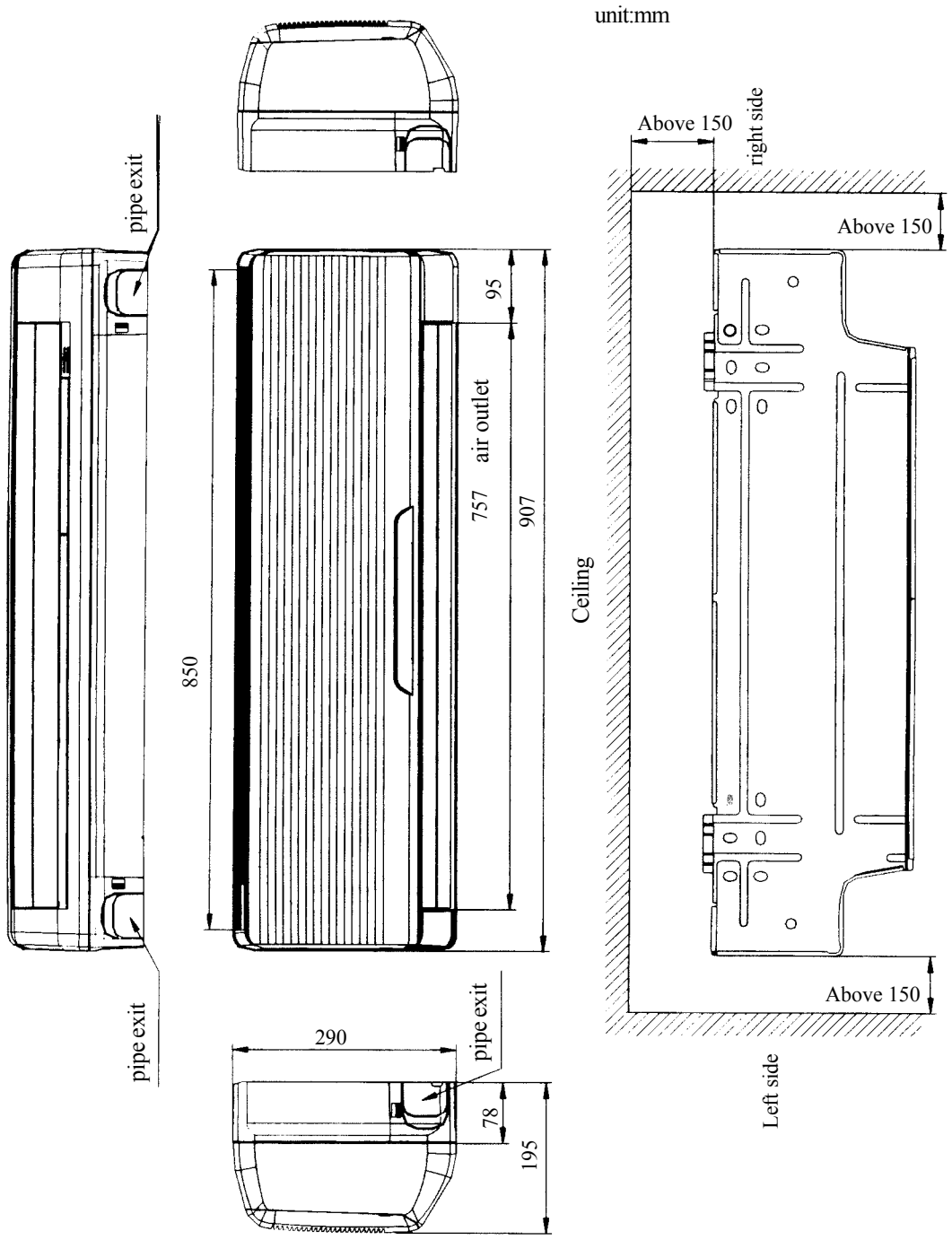

figure 3-5

3.5 Outlines and dimensions of outdoor unit.

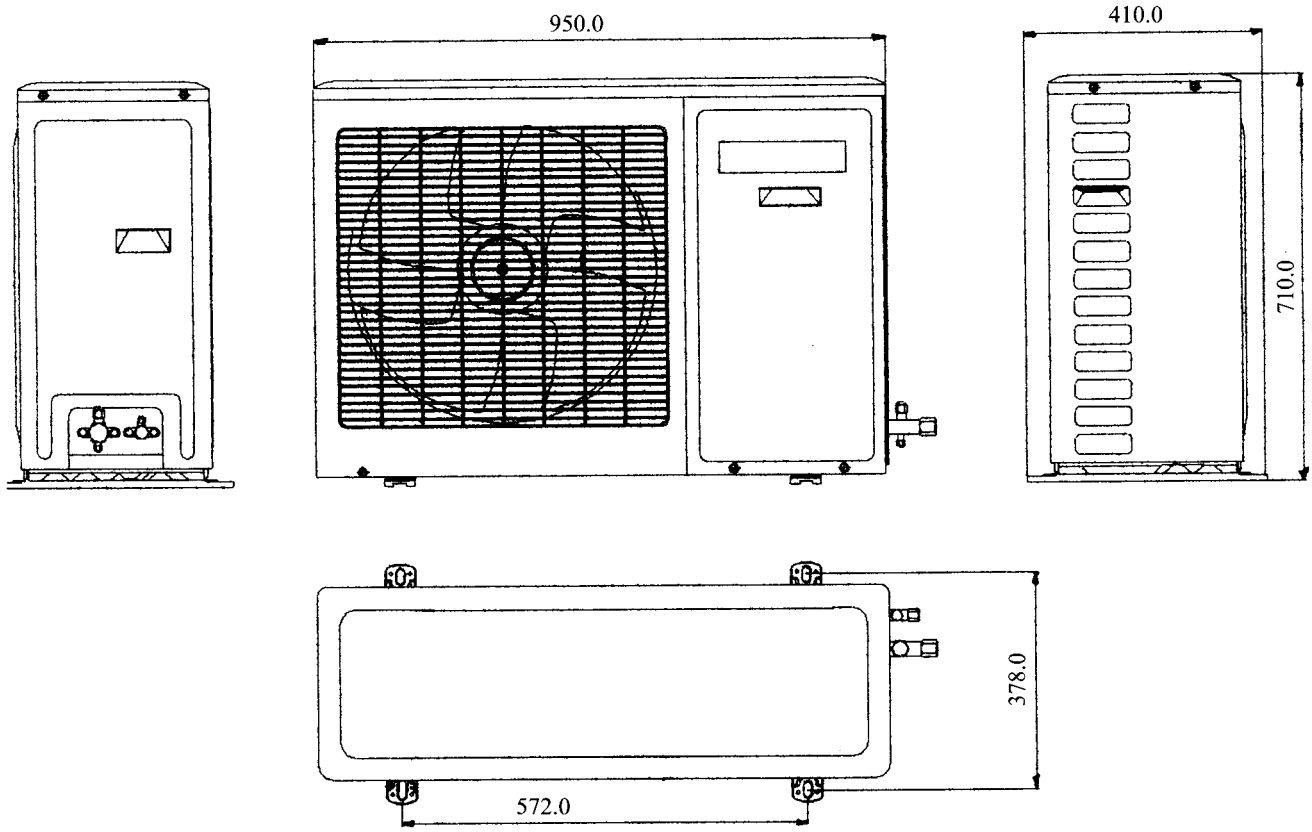

unit:mm

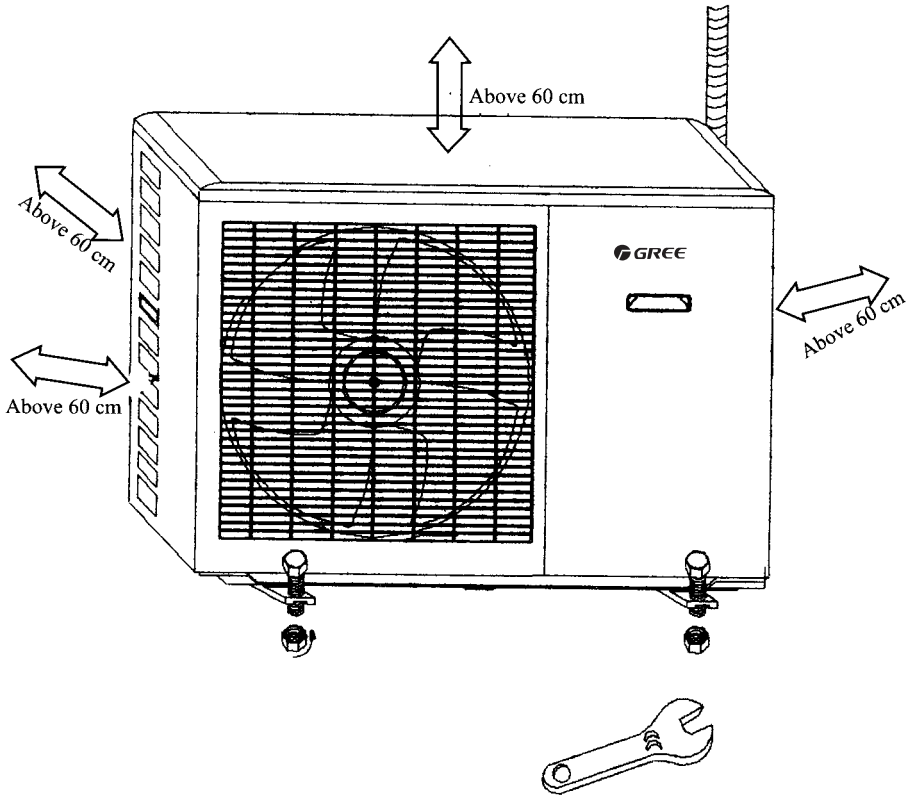

figure 3-6

3.6 Explosion view of indoor unit

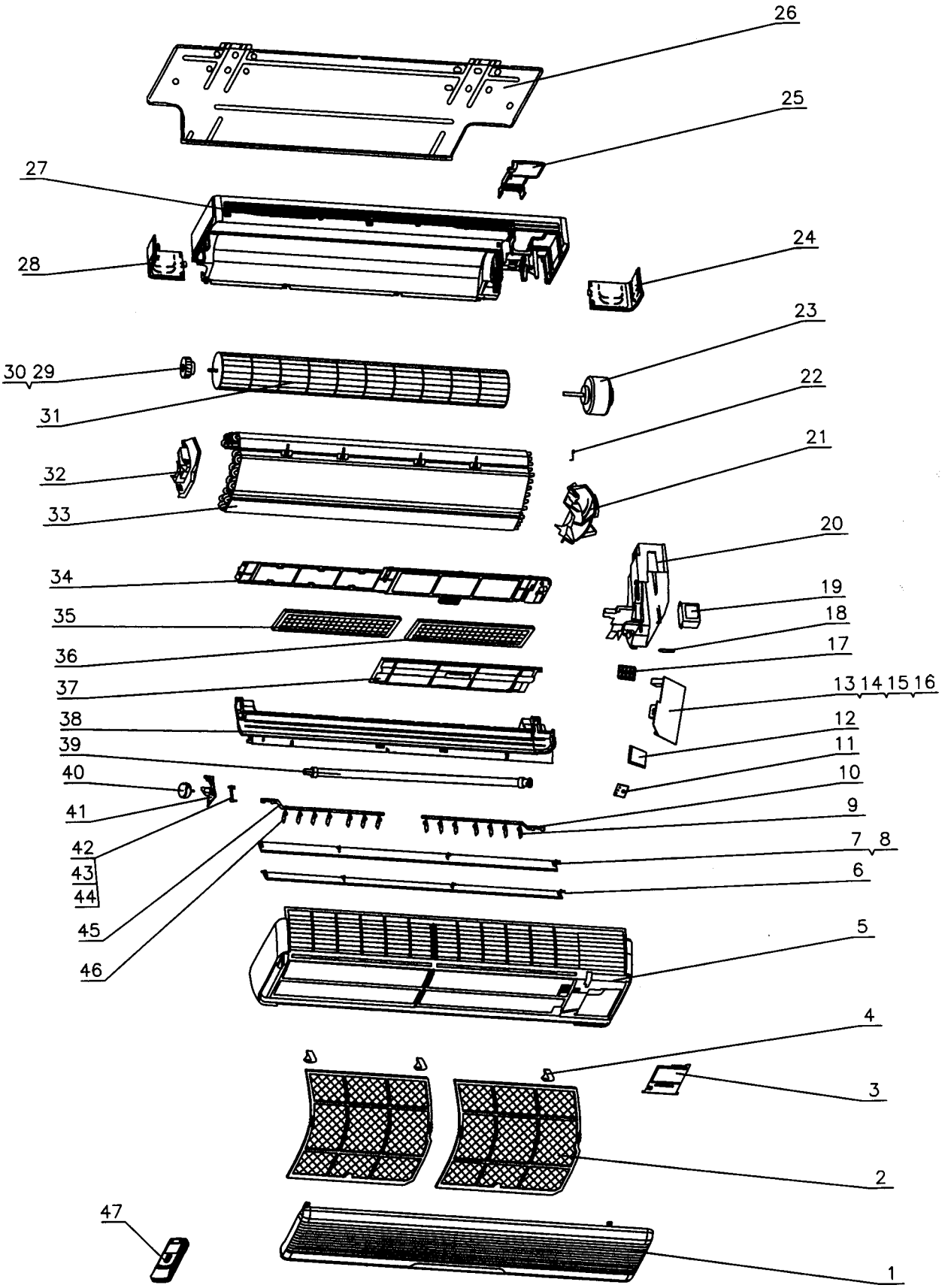

figure 3-7

3.7 Spare parts list of indoor unit

Table 3-9

No.	Description		Part No.				Qty
			KF-50G/A10	KFR-50G/A10	KF-60G/A10	KFR-60G/A10	
1	Front Panel	面板	20002010	20002010	20002010	20002010	1
2	Filter	过滤网	11122021	11122021	11122021	11122021	2
3	Electric Box Cover	电器盒盖	20102011	20102011	20102011	20102011	1
4	Screw Cover	螺钉盖	24252011	24252011	24252011	24252011	3
5	Front Case Assy	面板体部件	20002013	20002013	20002013	20002013	1
6	Lower Guide Louver	下导风板	10512012	10512012	10512012	10512012	1
7	Upper Guide Louver	上导风板	10512011	10512011	10512011	10512011	1
8	Guide Louver Bearing	导风板轴套	10542011	10542011	10542011	10542011	6
9	Right Swing Louver	右扫风叶片	10512014	10512014	10512014	10512014	7
10	Right Connecting Lever	扫风叶片右连杆	10582015	10582015	10582015	10582015	1
11	LED Board	接收板	30046005	30046005	30046005	30046005	1
12	LED Holder	指示灯架	24212007	24212007	24212007	24212007	1
13	PCB 5D51-2	控制器5D51-2	30025521				1
	PCB 5D52-2	控制器5D52-2		30025522			1
	PCB 5D51H2	控制器5D51H2			30025524		1
	PCB 5D52H2	控制器5D52H2				30025525	1
14	Tube Sensor	管温感温包	39000057	39000057	39000057	39000057	1
15	Room Sensor	室温感温包	39000042	39000042	39000042	39000042	1
16	Fuse 3.15A 250VAC	保险管3.15A	46010014	46010014	46010014	46010014	1
17	Terminal Board	四位接线板T4B3A-73	42011039	42011039	42011039	42011039	1
18	Wire Clip	压线片	70482401	70482401	70482401	70482401	2
19	Transformer	电源变压器SC31	43110176	43110176	43110176	43110176	1
20	Electric Box	电器盒	20102012	20102012	20102012	20102012	1
21	Right Evaporator Supporter	蒸发器右固定块	01072012	01072012	01072012	01072012	1
22	Sensor Insert	感温头插片A	42020064	42020064	42020064	42020064	1
23	Motor FN20D-PG	电机FN20D-PG	15012102	15012102	15012102	15012102	1
24	Right gate	底壳右出管板	26112012	26112012	26112012	26112012	1
25	Pipe Clamp	连接管压块	24242014	24242014	24242014	24242014	1
26	Wall-Mounting Frame	壁挂板	01252200	01252200	01252200	01252200	1
27	Rear Case	底壳	22202011	22202011	22202011	22202011	1
28	Left Gate	底壳左出管板	26112011	26112011	26112011	26112011	1
29	Ring of Bearing	轴承胶圈	76512205	76512205	76512205	76512205	1
30	Fan Bearing	风扇轴承	76512210	76512210	76512210	76512210	1
31	Cross Flow Fan	惯流风叶	10352021	10352021	10352021	10352021	1
32	Left Evaporator Supporter	蒸发器左固定块	01072011	01072011	01072011	01072011	1
33	Evaporator Assy	蒸发器部件	01002470	01002470	1002009	1002009	1
34	Air Cleaner holder	净化器固定架	24222014	24222014	24222014	24222014	1
35	Air Cleaner A	净化器滤网A	11012021	11012021	11012021	11012021	1
36	Air Cleaner B	净化器滤网B	11012022	11012022	11012022	11012022	1
37	Air Cleaner Frame	净化器上框	26112013	26112013	26112013	26112013	1
38	Water Tray Assy	接水盘部件	20182010	20182010	20182010	20182010	1
39	Drainage Pipe	排水管	05232004	05232004	05232004	05232004	1
40	Stepping Motor MP24EA	步进电机MP24EA	15212101	15212101	15212101	15212101	1
41	Stepping Motor Backseat	导风电机座	26152011	26152011	26152011	26152011	1
42	Upper Swing Lever	上摆杆	10582011	10582011	10582011	10582011	1
43	Lower Swing Lver	下摆杆	10582012	10582012	10582012	10582012	1
44	Connecting Lever	连杆	10582013	10582013	10582013	10582013	1
45	Left Connecting Lever	扫风叶片左连杆	10582014	10582014	10582014	10582014	1
46	Left Swing Louver	左扫风叶片	10512013	10512013	10512013	10512013	7
47	Remote Controller	遥控器Y512	30512505	30512505	30512505	30512505	1

The data are subject to change without notice.

Table 3-10

No.	Description		Part No.				Qty
			KF-50G/NA1	KFR-50G/NA1	KF-60G/NA10	KFR-60G/NA10	
1	Front Panel	面板	20002010	20002010	20002010	20002010	1
2	Filter	过滤网	11122021	11122021	11122021	11122021	2
3	Electric Box Cover	电器盒盖	20102011	20102011	20102011	20102011	1
4	Screw Cover	螺钉盖	24252011	24252011	24252011	24252011	3
5	Front Case Assy	面板体部件	20002013	20002013	20002013	20002013	1
6	Lower Guide Louver	下导风板	10512012	10512012	10512012	10512012	1
7	Upper Guide Louver	上导风板	10512011	10512011	10512011	10512011	1
8	Guide Louver Bearing	导风板轴套	10542011	10542011	10542011	10542011	6
9	Right Swing Louver	右扫风叶片	10512014	10512014	10512014	10512014	7
10	Right Connecting Lever	扫风叶片右连杆	10582015	10582015	10582015	10582015	1
11	LED Board	接收板	30046005	30046005	30046005	30046005	1
12	LED Holder	指示灯架	24212007	24212007	24212007	24212007	1
13	PCB 5D51-2	控制器5D51-2	30025521				1
	PCB 5D52-2	控制器5D52-2		30025522			1
	PCB 5D51H2	控制器5D51H2			30025524		1
	PCB 5D52H2	控制器5D52H2				30025525	1
14	Tube Sensor	管温感温包	39000057	39000057	39000057	39000057	1
15	Room Sensor	室温感温包	39000042	39000042	39000042	39000042	1
16	Fuse 3.15A 250VAC	保险管3.15A	46010014	46010014	46010014	46010014	1
17	Terminal Board	四位接线板T4B3A-73	42011039	42011039	42011039	42011039	1
18	Wire Clip	压线片	70482401	70482401	70482401	70482401	2
19	Transformer	电源变压器SC31	43110176	43110176	43110176	43110176	1
20	Electric Box	电器盒	20102012	20102012	20102012	20102012	1
21	Right Evaporator Supporter	蒸发器右固定块	01072012	01072012	01072012	01072012	1
22	Sensor Insert	感温头插片A	42020064	42020064	42020064	42020064	1
23	Motor FN20D-PG	电机FN20D-PG	15012102	15012102	15012102	15012102	1
24	Right gate	底壳右出管板	26112012	26112012	26112012	26112012	1
25	Pipe Clamp	连接管压块	24242014	24242014	24242014	24242014	1
26	Wall-Mounting Frame	壁挂板	01252200	01252200	01252200	01252200	1
27	Rear Case	底壳	22202011	22202011	22202011	22202011	1
28	Left Gate	底壳左出管板	26112011	26112011	26112011	26112011	1
29	Ring of Bearing	轴承胶圈	76512205	76512205	76512205	76512205	1
30	Fan Bearing	风扇轴承	76512210	76512210	76512210	76512210	1
31	Cross Flow Fan	贯流风叶	10352021	10352021	10352021	10352021	1
32	Left Evaporator Supporter	蒸发器左固定块	01072011	01072011	01072011	01072011	1
33	Evaporator Assy	蒸发器部件	01002470	01002470	1002009	1002009	1
34	Air Cleaner holder	净化器固定架	24222014	24222014	24222014	24222014	1
35	Air Cleaner A	净化器滤网A	11012021	11012021	11012021	11012021	1
36	Air Cleaner B	净化器滤网B	11012022	11012022	11012022	11012022	1
37	Air Cleaner Frame	净化器上框	26112013	26112013	26112013	26112013	1
38	Water Tray Assy	接水盘部件	20182010	20182010	20182010	20182010	1
39	Drainage Pipe	排水管	05232004	05232004	05232004	05232004	1
40	Stepping Motor MP24EA	步进电机MP24EA	15212101	15212101	15212101	15212101	1
41	Stepping Motor Backseat	导风电机座	26152011	26152011	26152011	26152011	1
42	Upper Swing Lever	上摆杆	10582011	10582011	10582011	10582011	1
43	Lower Swing Lver	下摆杆	10582012	10582012	10582012	10582012	1
44	Connecting Lever	连杆	10582013	10582013	10582013	10582013	1
45	Left Connecting Lever	扫风叶片左连杆	10582014	10582014	10582014	10582014	1
46	Left Swing Louver	左扫风叶片	10512013	10512013	10512013	10512013	7
47	Remote Controller	遥控器Y512	30512505	30512505	30512505	30512505	1

The data are subject to change without notice.

Table 3-11

No.	Description		Part No.				Qty
			KF-50G/A10-12206	KFR-50G/A10-12206	GSW24-22L/A(I)	GSW24-22R/A(I)	
1	Front Panel	面板	20002010	20002010	20002010	20002010	1
2	Filter	过滤网	11122021	11122021	11122021	11122021	2
3	Electric Box Cover	电器盒盖	20102011	20102011	20102011	20102011	1
4	Screw Cover	螺钉盖	24252011	24252011	24252011	24252011	3
5	Front Case Assy	面板体部件	20002013	20002013	20002013	20002013	1
6	Lower Guide Louver	下导风板	10512012	10512012	10512012	10512012	1
7	Upper Guide Louver	上导风板	10512011	10512011	10512011	10512011	1
8	Guide Louver Bearing	导风板轴套	10542011	10542011	10542011	10542011	6
9	Right Swing Louver	右扫风叶片	10512014	10512014	10512014	10512014	7
10	Right Connecting Lever	扫风叶片右连杆	10582015	10582015	10582015	10582015	1
11	LED Board	接收板	30046011	30046011	30046011	30046011	1
12	LED Holder	指示灯架	24212007	24212007	24212007	24212007	1
13	PCB 5D51-	控制器5D51-	30025289				1
	PCB 5D52-	控制器5D52-		30025290			1
	PCB 5D51H	控制器5D51H			30025168		1
	PCB 5D52H1	控制器5D52H				30025185	1
14	Tube Sensor	管温感温包	39000120	39000120	39000120	39000120	1
15	Room Sensor	室温感温包	39000157	39000157	39000157	39000157	1
16	Fuse 3.15A 250VAC	保险管3.15A	46010014	46010014	46010014	46010014	1
17	Terminal Board	四位接线板T4B3A-73	42011039	42011039	42011039	42011039	1
18	Wire Clip	压线片	70482401	70482401	70482401	70482401	2
19	Transformer	电源变压器SC31	43110176	43110176	43110176	43110176	1
20	Electric Box	电器盒	20102012	20102012	20102012	20102012	1
21	Right Evaporator Supporter	蒸发器右固定块	01072012	01072012	01072012	01072012	1
22	Sensor Insert	感温头插片A	42020064	42020064	42020064	42020064	1
23	Motor FN20P-PG	电机FN20P-PG	15012104	15012104	15012104	15012104	1
24	Right gate	底壳右出管板	26112012	26112012	26112012	26112012	1
25	Pipe Clamp	连接管压块	24242014	24242014	24242014	24242014	1
26	Wall-Mounting Frame	壁挂板	01252200	01252200	01252200	01252200	1
27	Rear Case	底壳	22202011	22202011	22202011	22202011	1
28	Left Gate	底壳左出管板	26112011	26112011	26112011	26112011	1
29	Ring of Bearing	轴承胶圈	76512205	76512205	76512205	76512205	1
30	Fan Bearing	风扇轴承	76512210	76512210	76512210	76512210	1
31	Cross Flow Fan	贯流风叶	10352021	10352021	10352021	10352021	1
32	Left Evaporator Supporter	蒸发器左固定块	01072011	01072011	01072011	01072011	1
33	Evaporator Assy	蒸发器部件	01002470	01002470	1002009	1002009	1
34	Air Cleaner holder	净化器固定架	24222014	24222014	24222014	24222014	1
35	Air Cleaner A	净化器滤网A	11012021	11012021	11012021	11012021	1
36	Air Cleaner B	净化器滤网B	11012022	11012022	11012022	11012022	1
37	Air Cleaner Frame	净化器上框	26112013	26112013	26112013	26112013	1
38	Water Tray Assy	接水盘部件	20182010	20182010	20182010	20182010	1
39	Drainage Pipe	排水管	05232004	05232004	05232004	05232004	1
40	Stepping Motor MP24EA	步进电机MP24EA	15212101	15212101	15212101	15212101	1
41	Stepping Motor Backseat	导风电机座	26152011	26152011	26152011	26152011	1
42	Upper Swing Lever	上摆杆	10582011	10582011	10582011	10582011	1
43	Lower Swing Lver	下摆杆	10582012	10582012	10582012	10582012	1
44	Connecting Lever	连杆	10582013	10582013	10582013	10582013	1
45	Left Connecting Lever	扫风叶片左连杆	10582014	10582014	10582014	10582014	1
46	Left Swing Louver	左扫风叶片	10512013	10512013	10512013	10512013	7
47	Remote Controller	遥控器Y512	30512505	30512505	30512505	30512505	1

The data are subject to change without notice.

Table 3-12

No	Description		Part No.				Qty
			KT3F-60G/A10	KT3FR-60G/A10	KT3F-60G/A10-12206	KT3FR-60G/A10-12206	
1	Front Panel	面板	20002010	20002010	20002010	20002010	1
2	Filter	过滤网	11122021	11122021	11122021	11122021	2
3	Electric Box Cover	电器盒盖	20102011	20102011	20102011	20102011	1
4	Screw Cover	螺钉盖	24252011	24252011	24252011	24252011	3
5	Front Case Assy	面板体	20002012	20002012	20002012	20002012	1
6	Lower Guide Louver	下导风板	10512012	10512012	10512012	10512012	1
7	Upper Guide Louver	上导风板	10512011	10512011	10512011	10512011	1
8	Guide Louver Bearing	导风板轴套	10542011	10542011	10542011	10542011	6
9	Right Swing Louver	右扫风叶片	10512014	10512014	10512014	10512014	7
10	Right Connecting Lever	扫风叶片右连杆	10582015	10582015	10582015	10582015	1
11	LED Board	接收板	30046011	30046011	30046011	30046011	1
12	LED Holder	指示灯架	24212007	24212007	24212007	24212007	1
13	PCB 5D52H	控制器 5D52H	\	30025185	\	30025185	1
13	PCB 5D51H	控制器 5D51H	30025168	\	30025168	\	1
14	Tube Sensor	管温感温包	39000120	39000120	39000120	39000120	1
15	Room Sensor	室温感温包	39000157	39000157	39000157	39000157	1
16	Fuse 3.15A 250VAC	保险管3.15A	46010014	46010014	46010014	46010014	1
17	Terminal Board	四位接线板 T4B3A-73	42011039	42011039	42011039	42011039	1
18	Wire Clip	压线片	70482401	70482401	70482401	70482401	2
19	Transformer	电源变压器SC31	43110176	43110176	43110176	43110176	1
20	Electric Box	电器盒	20102012	20102012	20102012	20102012	1
21	Right Evaporator Supporter	蒸发器右固定块	01072012	01072012	01072012	01072012	1
22	Sensor Insert	感温头插片A	42020064	42020064	42020064	42020064	1
23	Motor FN20D-PG	电机 FN20D-PG	15012102	15012102	\	\	1
23	Motor FN20P-PG	电机 FN20P-PG	\	\	15012104	15012104	1
24	Right gate	底壳右出管板	26112012	26112012	26112012	26112012	1
25	Pipe Clamp	连接管压块	24242014	24242014	24242014	24242014	1
26	Wall-Mounting Frame	壁挂板	01252200	01252200	01252200	01252200	1
27	Rear Case	底壳部件	22202010	22202010	22202308	22202308	1
28	Left Gate	底壳左出管板	26112011	26112011	26112011	26112011	1
29	Ring of Bearing	轴承胶圈	76512205	76512205	76512205	76512205	1
30	Fan Bearing	风扇轴承	76512210	76512210	76512210	76512210	1
31	Cross Flow Fan	贯流风叶	10352021	10352021	10352021	10352021	1
32	Left Evaporator Supporter	蒸发器左固定块	01072011	01072011	01072011	01072011	1
33	Evaporator Assy	蒸发器部件	01002009	01002009	01002009	01002009	1
34	Air Cleaner holder	净化器固定架	24222014	24222014	24222014	24222014	1
35	Air Cleaner A	净化器滤网A	11012021	11012021	11012021	11012021	1
36	Air Cleaner B	净化器滤网B	11012022	11012022	11012022	11012022	1
37	Air Cleaner Frame	净化器上框	26112013	26112013	26112013	26112013	1
38	Water Tray Assy	接水盘部件	20182010	20182010	20182010	20182010	1
39	Drainage Pipe	排水管	05232004	05232004	05232004	05232004	1
40	Stepping Motor MP24EA	步进电机MP24EA	15212101	15212101	15212101	15212101	1
41	Stepping Motor Backseat	导风电机座	26152011	26152011	26152011	26152011	1
42	Upper Swing Lever	上摆杆	10582011	10582011	10582011	10582011	1
43	Lower Swing Lever	下摆杆	10582012	10582012	10582012	10582012	1
44	Connecting Lever	连杆	10582013	10582013	10582013	10582013	1
45	Left Connecting Lever	扫风叶片左连杆	10582014	10582014	10582014	10582014	1
46	Left Swing Louver	左扫风叶片	10512013	10512013	10512013	10512013	7
47	Remote Controller	遥控器 Y512(GREE)	30512505	30512505	30512505	30512505	1

The data are subject to change without notice.

3.8 Explosive view of outdoor unit

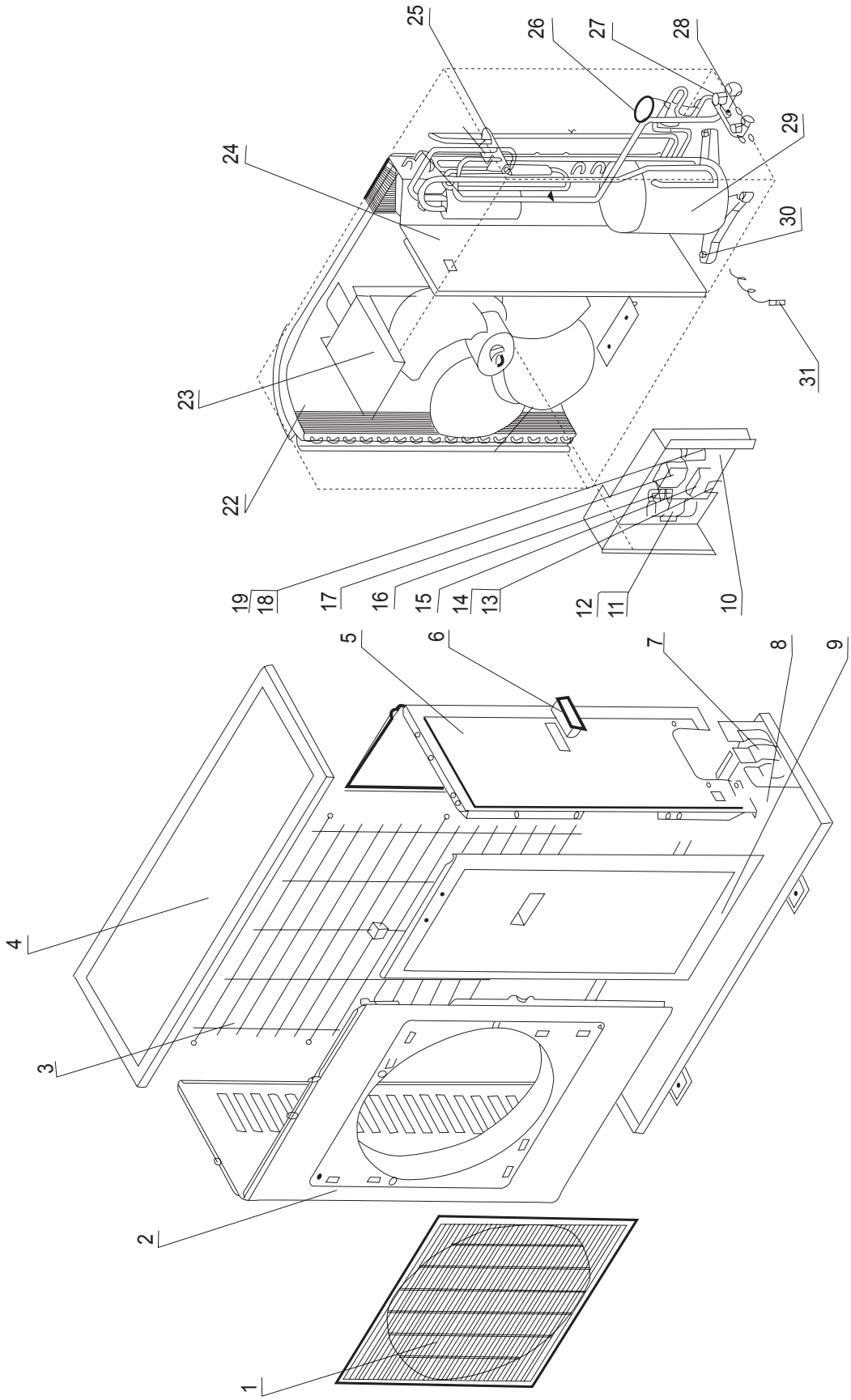

figure 3-8

3.9 Spare parts list of outdoor unit

Table 3-13

No.	Description		Part No.				Qty
			KF-50W/A10	KFR-50W/A10	KF-60W/A10	KFR-60W/A10	
1	Front Grill	面罩组件	22265250	22265250	22265250	22265250	1
2	Front Plate	外罩	01433030	01433030	01433030	01433030	1
3	Rear grill Assy	网罩组件	01473024	01473024	01473024	01473024	1
4	Top cover Assy	顶盖组件	01255260	01255260	01255260	01255260	1
5	Rear Side Plate	后侧板	01305001	01305001	01305001	01305001	1
6	Handle	把手	26235253	26235253	26235253	26235253	2
7	Valve Support	阀门支架	01715256	01715256	01715256	01715256	1
8	Metal Base	底盘部件	01203391	01203391	01205032	01205107	1
9	Front Side Support	前侧板组件	01303019	01303019	01303019	01303019	1
10	Electric Plate	电器盒	20102007	01415010	20102007	01415010	1
11	Capacitor clamp	电容夹	02143442	02143442	02143442	02143442	1
12	Comp Capacitor 50uF	压缩机电容	33010710	33010710	33010710	33010710	1
13	Wire Clamp	电线夹	71010102	71010102	71010102	71010102	2
14	Insulation Gasket D	绝缘垫片D	70410525	70410525	70410525	70410525	1
15	Terminal Board	三位接线板	42011073	42011113	42011073	42011113	1
16	Fan Capacitor 2.5uF	风机电容	33010026	33010026			1
	Fan Capacitor 3uF	风机电容			33010027	33010027	1
17	Relay	继电器	44020311	44020311	44020311	44020311	1
18	Terminal Board 2-8	2-8接线板	42011103	42011103	42011103	42011103	1
19	Filter Capacitor	滤波电容0.33uF		33020201		33020201	1
20	Axial Flow Fan	轴流风叶	10335257	10335257	10335253	10335253	1
21	Motor LW80D	电机	15015054	15015054			1
	Motor LW80B	电机			15015053	15015053	1
22	Condenser Assy	冷凝器	01103445				1
	Condenser Assy	冷凝器		01133023			1
	Condenser Assy	冷凝器			01105132		1
	Condenser Assy	冷凝器				01133027	1
23	Motor Support	电机支架	01703027	01703027	01703027	01703027	1
24	Isolation Sheet Assy	中间隔板组件	01233022	01233022	01233022	01233022	1
25	4-way Valve	四通阀	43000314		43000313	1	18
26	Capillary Assy	毛细管部件	03003133	03003136	03003137	03003134	1
27	Valve	大阀门5/8 "	07103008	07103008			1
	Valve	大阀门3/8 "			07105252	07105252	1
	Valve	阀门1/4 "	07100014	07100014			1
28	Valve	阀门3/8 "			07105256		1
	Valve	阀门1/4 "				07103016	1
29	Compressor SHW33T4C-U	压缩机及配件	00100131	00100131			1
	Compressor SHV33YE6UU	压缩机及配件			00100144	00100144	1
30	Nut with Washer M8	带垫螺母	70310014	70310014	70310015	70310015	3
31	Tube Sensor	室外感温头		39000006		39000006	1

The data are subject to change without notice.

Table 3-14

No.	Description		Part No.				Qty
			KF-50W/NA1	KFR-50W/NA1	KF-60W/NA10	KFR-60W/NA10	
1	Front Grill	面罩组件	22265250	22265250	22265250	22265250	1
2	Front Plate	外罩	01433030	01433030	01433030	01433030	1
3	Rear grill Assy	网罩组件	01473024	01473024	01473024	01473024	1
4	Top Cover Assy	顶盖组件	01255260	01255260	01255260	01255260	1
5	Rear Side Plate	后侧板	01305001	01305001	01305001	01305001	1
6	Handle	把手	26235253	26235253	26235253	26235253	2
7	Valve Support	阀门支架	01715256	01715256	01715256	01715256	1
8	Metal Base	底盘部件	01203063	01205010	01205010	01203059	1
9	Front Side Support	前侧板组件	01303019	01303019	01303019	01303019	1
10	Electric Plate	电器盒	20102007	01415010	20102007	01415010	1
11	Capacitor Clamp	电容夹	02143442	02143442	02143442	02143442	1
12	Comp Capacitor 40uF	压缩机电容	33000022	33000022			1
	Comp Capacitor 35uF	压缩机电容			33010739	33010739	1
13	Wire Clamp	电线夹	71010102	71010102	71010102	71010102	2
14	Insulation Gasket D	绝缘垫片D	70410525	70410525	70410525	70410525	1
15	Terminal Board	三位接线板	42011073	42011113	42011073	42011113	1
16	Fan Capacitor	风机电容	33010027	33010027	33010027	33010027	1
17	Relay	继电器	44020311	44020311	44020334	44020334	1
18	Terminal Board 2-8	2-8接线板	42011103	42011103	42011103	42011103	1
19	Filter Capacitor	滤波电容0.33uF		33020201		33020201	1
20	Axial Flow Fan	轴流风叶	10335253	10335253	10335253	10335253	1
21	Motor LW60B	电机	15015205	15015205			1
	Motor LW80H	电机			15013107	15013107	1
	Condenser Assy	冷凝器	01133379		01133379		1
	Condenser Assy	冷凝器		01133023			1
22	Condenser Assy	冷凝器				01133027	1
	Condenser Assy	冷凝器					1
23	Motor Support	电机支架	01703027	01703027	01703027	01703027	1
24	Isolation Sheet Assy	中间隔板组件	01233022	01233022	01233022	01233022	1
25	4-way Valve	四通阀		43000305		43000305	1
26	Capillary Assy	毛细管部件	03003127	03003159	03003144	03003048	1
27	Valve 1/2"	大阀门1/2 "	07100001	07100001			1
	Valve	大阀门5/8 "			07105007	07105007	1
28	Valve 1/4"	阀门 1/4 "	07100131	07100131			1
	Valve 3/8"	阀门 3/8 "			07103204		1
	Valve 3/8"	阀门 3/8 "				07103017	1
29	Compressor C-2RN170H5U	压缩机及配件	00100075	00100075			1
	Compressor C-RN190H5B	压缩机及配件			00100064	00100064	1
30	Nut with Washer M8	带垫螺母	70310014	70310014	70310014	70310014	3
31	Tube Sensor	室外感温头		39000006		39000006	1

The data are subject to change without notice.

Table 3-15

No.	Description		Part No.				Qty
			KF-50W/ A10-12206	KFR-50W/ A10-12206	GSW24-22 L/A(O)	GSW24-22 R/A(O)	
1	Front Grill	面罩组件	22265250	22265250	22265250	22265250	1
2	Front Plate	外罩	01433030	01433030	01433030	01433030	1
3	Rear grill Assy	网罩组件	01473024	01473024	01473024	01473024	1
4	Top cover Assy	顶盖组件	01255260	01255260	01255260	01255260	1
5	Rear Side Plate	后侧板	01305001	01305001	01305001	01305001	1
6	Handle	把手	26235253	26235253	26235253	26235253	2
7	Valve Support	阀门支架	01715256	01715256	01715256	01715256	1
8	Metal Base	底盘部件	01203391	01203391	01203058	01203058	1
9	Front Side Support	前侧板组件	01303019	01303019	01303019	01303019	1
10	Electric Plate	电器盒	20102007	01415010	01415011	01415011	1
11	Capacitor clamp	电容夹	02143442	02143442	02143441	02143441	1
12	Comp Capacitor 45uF	压缩机电容	33000012	33000012			1
	Comp Capacitor 35uF	压缩机电容			33000032	33000032	1
13	Wire Clamp	电线夹	71010102	71010102	71010102	71010102	2
14	Insulation Gasket D	绝缘垫片D	70410525	70410525	70410525	70410525	1
15	Terminal Board	三位接线板	42011073	42011113	42010245	42010245	1
16	Fan Capacitor 3uF	风机电容	33010021	33010021		33010021	1
	Fan Capacitor 3uF	风机电容			33010027		1
17	Relay	继电器	44020311	44020311	44020311	44020311	1
18	Terminal Board 2-8	2-8接线板	42011103	42011103	42011103	42011103	1
19	Filter Capacitor	滤波电容0.33uF		33020201		33020201	1
20	Axial Flow Fan	轴流风叶	10335257	10335257	10335253	10335253	1
21	Motor FW68B	电机	15013062	15013062			1
	Motor LW80P	电机			15012106	15012106	1
	Condenser Assy	冷凝器	01103445				1
22	Condenser Assy	冷凝器		01133023			1
	Condenser Assy	冷凝器			01133379		1
	Condenser Assy	冷凝器				01133027	1
23	Motor Support	电机支架	01703027	01703027	01703027	01703027	1
24	Isolation Sheet Assy	中间隔板组件	01233022	01233022	01233022	01233022	1
25	4-way Valve	四通阀		43000314		43000313	1
26	Capillary Assy	毛细管部件	03003125	03003126	03003140	03003043	1
27	Valve 1/2"	大阀门1/2 "	07103008	07103008			1
	Valve 5/8"	大阀门5/8 "			07105252	07105252	1
	Valve 1/4"	阀门 1/4 "	07100014	07100014			1
28	Valve 3/8"	阀门 3/8 "			07105256		1
	Valve 3/8"	阀门 3/8 "				07103016	1
29	Compressor SHZ73LCZ-U	压缩机及配件	00100105	00100105			1
	Compressor CIDQ-0200-PPV-506	压缩机及配件			00100010	00100010	1
30	Nut with Washer M8	带垫螺母	70310014	70310014	70310014	70310014	3
31	Tube Sensor	室外感温头		39000006		39000006	1

The data are subject to change without notice.

Table 3-16

No	Description		Part No.				Qty
			KT3F-60W/A10	KT3FR-60W/A10	KT3FR-60W/A10-12206	KT3FR-60W/A10-12206	
1	Front Grill	面罩组件	22265250	22265250	22265250	22265250	1
2	Front Plate	外罩	01433030	01433030	01433030	01433030	1
3	Rear grill Assy	网罩组件	01473024	01473024	01473024	01473024	1
4	Top cover Assy	顶盖组件	01255260	01255260	01255260	01255260	1
5	Rear Side Plate	后侧板	01305001	01305001	01305001	01305001	1
6	Handle	把手	26235253	26235253	26235253	26235253	1
7	Valve Support	阀门支架	01715256	01715256	01715256	01715256	1
8	Metal Base	底盘部件	01203058	01203058	01203058	01203058	1
9	Front Side Support	前侧板组件	01303019	01303019	01303019	01303019	1
10	Electric Plate	电器盒	01415011	01415011	01415011	01415010	1
11	Capacitor clamp	电容夹	02143441	02143441	02143441	02143441	1
12	Comp Capacitor 40uF	电容CBB65 40uF/450V(440V)	\	\	33000023	33000023	1
12	Comp Capacitor 45uF	电容CBB65 45uF/440VAC(450V)	33000012	33000012	\	\	1
13	Wire Clamp	电线夹	71010102	71010102	71010102	71010102	2
14	Insulation Gasket D	绝缘垫片D	70410525	70410525	70410525	70410525	1
15	Terminal Board	接线板T3601	42010245	42010245	42010245	42010245	1
16	Fan Capacitor 3uF	电容CBB61 3uF/450V	33010027	33010027	\	\	1
16	Fan Capacitor 3.5uF	电容CBB61 3.5MF/450V	\	\	33010010	33010010	1
17	Start Relay 3ARR3CT3P5	3ARR3CT3P5	\	\			
17	Start Relay 3ARR3CT24S5	启动继电器 3ARR3CT24S5	\	\	44020335	44020335	1
18	Terminal Board 2-8	2-8接线板	42011103	42011103	42011103	42011103	1
19	Capacitor 145-174uF/250VAC	电容 145-174uF/250VAC	33010713	33010713	33010713	33010713	1
20	Axial Flow Fan	轴流风叶	10335257	10335257	10335257	10335253	1
21	Motor LW80D	电机 LW80D	15015054	15015054	\	\	1
21	Motor LW80B	电机FW68B	\	\	15013062	15013062	1
22	Condenser Assy	冷凝器	01133379	01133027	01133379	01133027	1
23	Motor Support	电机支架	01703027	01703027	01703027	01703027	1
24	Isolation Sheet Assy	中间隔板组件	01233022	01233022	01233022	01233022	1
25	4-way Valve	四通阀STF-0202	\	43000313	\	43000313	1
26	Capillary Assy	毛细管部件	03003144	03003163	03003144	03003042	1
27	Valve 5/8"	5/8"	07103008	07103008	07103008	07103008	1
28	Valve 3/8"	阀门 3/8"	07100014	07100014	07100014	07100014	1
29	Compressor CI24KQ-PFV-240B	压缩机	00100014	00100014	\	\	1
29	Compressor CI32KQ-PFZ-240	压缩机	\	\	00100013	00100013	1
30	Nut with Washer M8	带垫螺母M8	70310014	70310014	70310014	70310014	3
31	Tube Sensor	室外感温头	\	39000006	\	39000006	1

The data are subject to change without notice.

3.10 Circuit diagram

These circuit diagrams are subject to change without notice.
Please refer to the ones stuck on the machines.

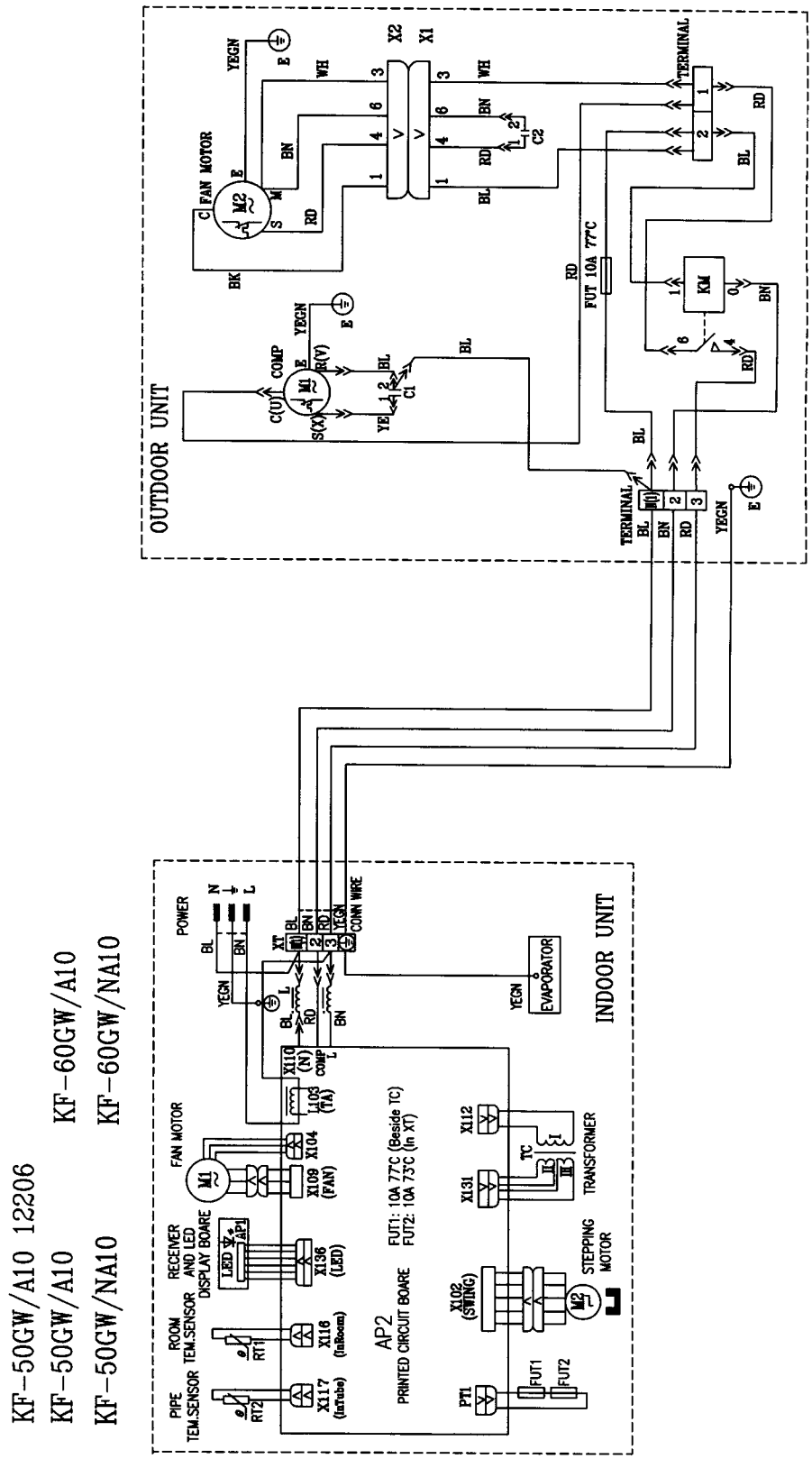

figure 3-9

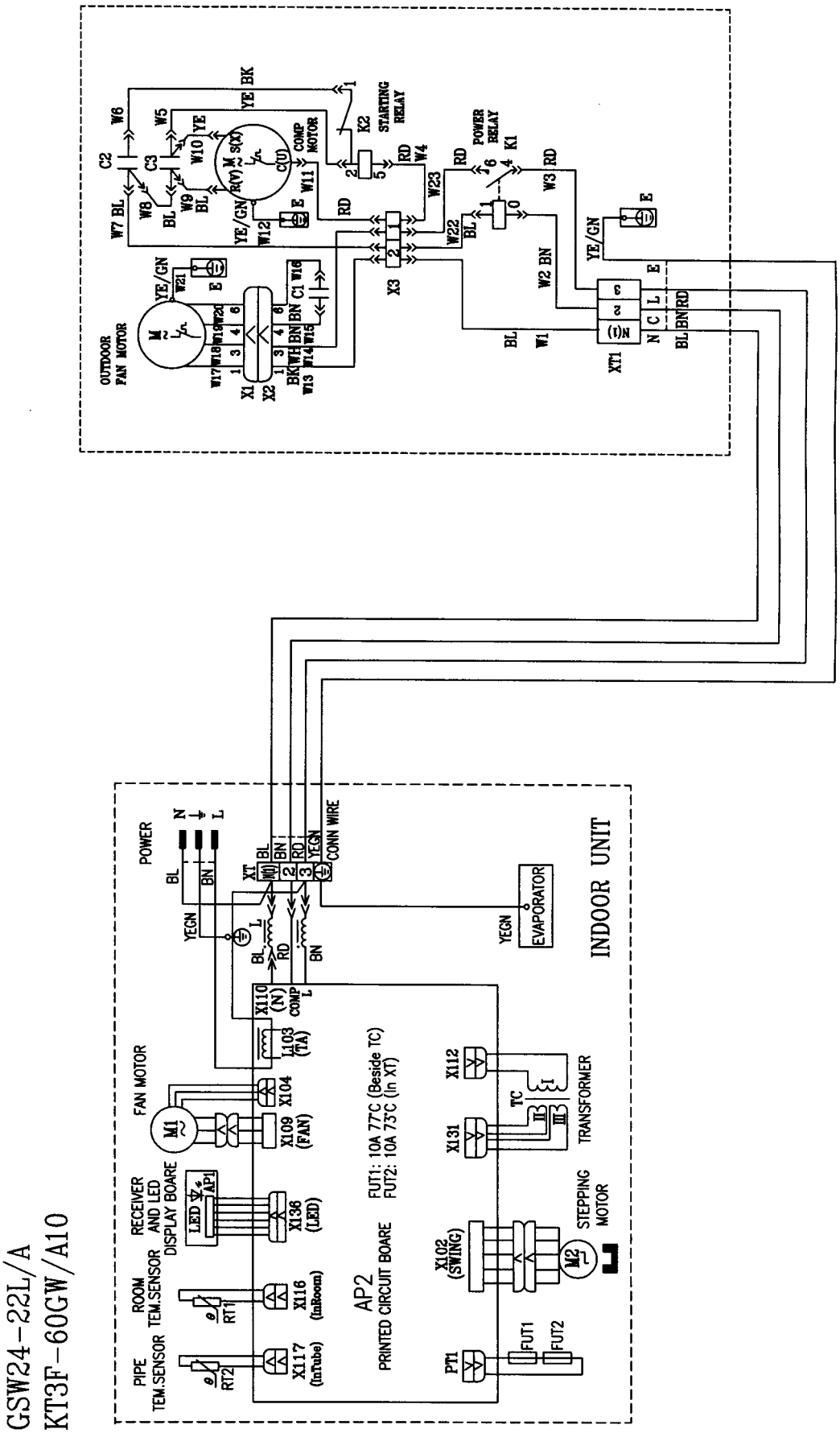
GSW24-22L/A
KT3F-60GW/A10
OUTDOOR FAN MOTOR
COMP MOTOR
STARTING RELAY
POWER RELAY
POWER
CONN WIRE
INDOOR UNIT
EVAPORATOR
FAN MOTOR
RECEIVER AND LED DISPLAY BOARE
ROOM TEM.SENSOR
PIPE TEM.SENSOR
AP2
PRINTED CIRCUIT BOARE
FUT1: 10A 77°C (Beside TC)
FUT2: 10A 73°C (In XT)
TRANSFORMER
STEPPING MOTOR

figure 3-10

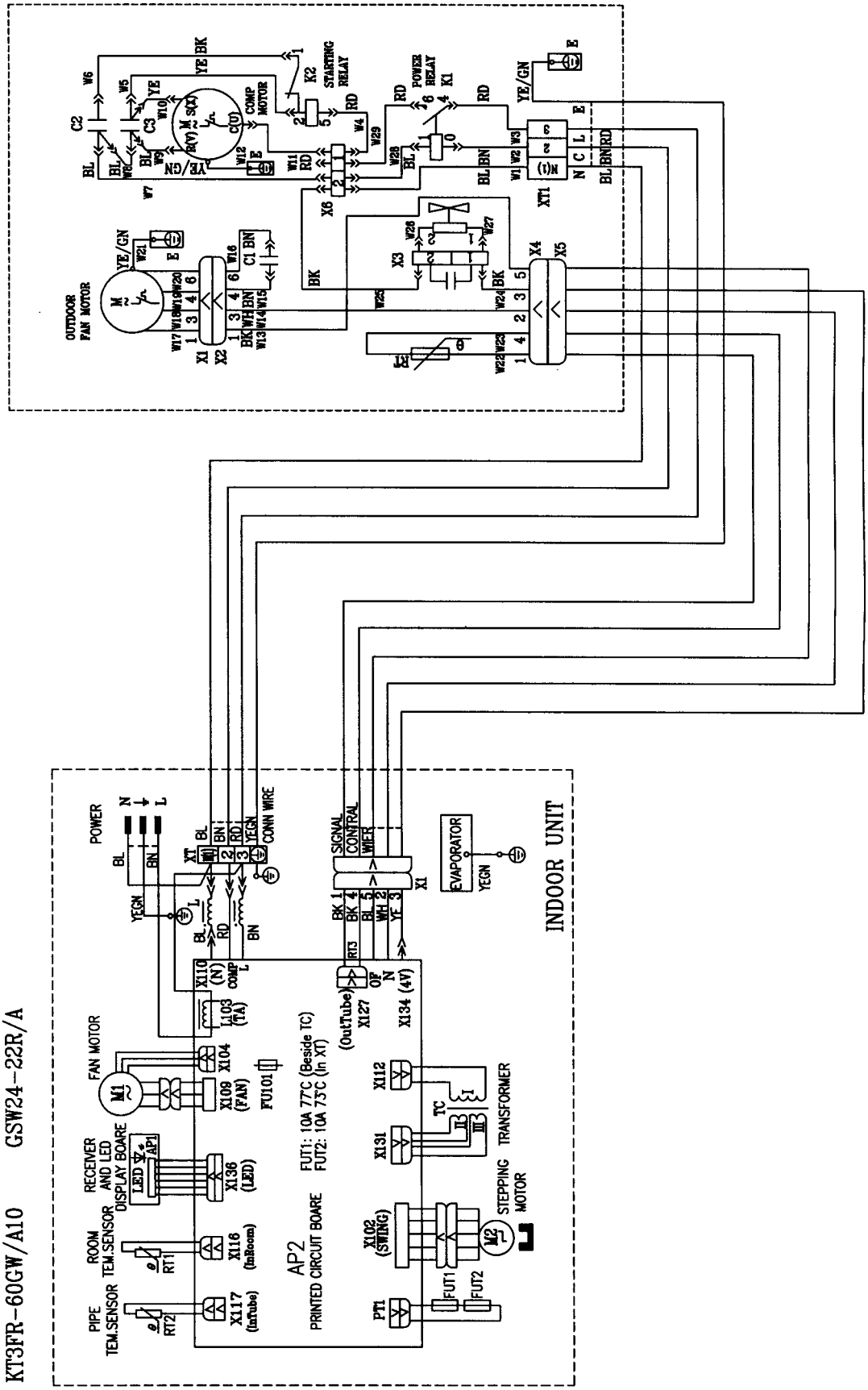
KT3FR-60GW/A10
GSW24-22R/A
INDOOR UNIT
OUTDOOR FAN MOTOR
COMP MOTOR
STARTING RELAY
POWER RELAY
POWER
CONN WIRE
SIGNAL CONTRAL WIRE
EVAPORATOR
FAN MOTOR
RECEIVER AND LED DISPLAY BOARE
ROOM TEM.SENSOR
PIPE TEM.SENSOR
AP2
PRINTED CIRCUIT BOARE
FUT1: 10A 77°C (Beside TC)
FUT2: 10A 73°C (In XT)
TRANSFORMER
STEPPING MOTOR

figure 3-11

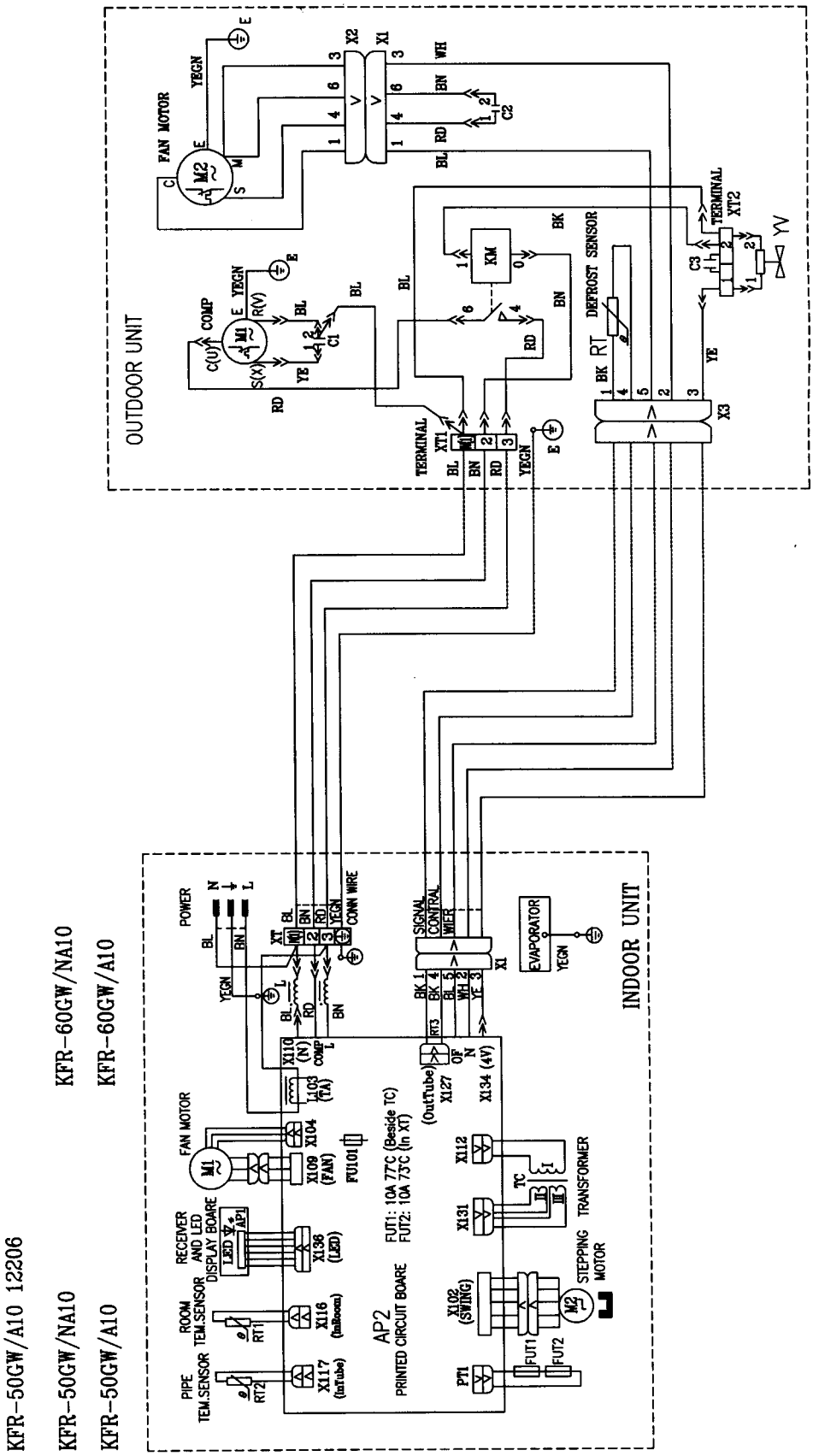
KFR-50GW/A10 12206
KFR-50GW/NA10
KFR-50GW/A10
KFR-60GW/NA10
KFR-60GW/A10
OUTDOOR UNIT
INDOOR UNIT
FAN MOTOR
COMP
DEFROST SENSOR
TERMINAL
POWER
CONN WIRE
SIGNAL CONTRAL WIER
EVAPORATOR
RECEIVER AND LED DISPLAY BOARE
ROOM TEM.SENSOR
PIPE TEM.SENSOR
AP2
PRINTED CIRCUIT BOARE
FUT1: 10A 77°C (Beside TC)
FUT2: 10A 73°C (In XT)
STEPPING MOTOR
TRANSFORMER

figure 3-12

3.11 PCB function manual

5 In 1 PCB Function manual

A. running mode

1. cooling 2.dehumidifying 3.heating 4.fan 5.auto

B. input parameters

1. indoor ambient temp. T_{in}
2. evaporator tube temp. T_{eva}
3. setting temp. T_{set}
4. condenser tube temp. T_{con}
5. outdoor ambient temp. T_{out}

C. targets

1. indoor motor (PG motor)
2. swing motor
3. outdoor motor (two speeds motor)
4. compressor
5. four-way reversing valve
6. electric heater
7. fresh motor
8. air cleaner

D. fundamental functions

1. cooling mode

(1) the running conditions and control measures

a. if $T_{in} \geqslant T_{set} + 1$℃, the machine runs at the cooling mode. Compressor runs, outdoor motor runs at low speed , indoor fan runs at the set fan speed.

b. if $T_{in} \leqslant T_{set} - 1$℃, the machine stops. Compressor stops first , outdoor motor stops after 15 seconds , indoor motor runs at the set fan speed.

c. if $T_{set} - 1$℃ $< T_{in} < T_{set} + 1$℃,keep the previous state.

(2) in this mode, the reversing valve is inactive, the temp. setting range is from 16~30℃.

(3) Protect function

a. anti-freezing function.

if compressor have run 6 minutes , and detect $T_{eva} < 0$℃ for continuous 3 minutes, then the compressor , outdoor fan stopped , indoor fan run at the set fan speed. After 3 minutes later, it will run at the original state if $T_{eva} \geqslant 10$℃.

b. compressor protection

Compressor's starting interval should be more than 3 minutes no matter in whatever modes and conditions. If it's plugged in first time, the compressor does not have 3 minutes delay. When compressor is started, it will not stop within 5 minutes unless it is plugged out.

c. overload protection

If it detect the system current surpass the designed 13 A for continuous 3 minutes, the machine go into fan mode, when 3 minutes passed and it detect the current no more than 13 A, it will back to original state. If it detects overloading states for 3 consecutive times within 30 minutes, the machine stops, and must be restarted by remote controller.

d. locked motor protection

if it detects no feedback from the PG motor for continuous 15 seconds , the machine stops, after 3 minutes delay, the machine backs to original state. If the motor be detected locked for 3 consecutive times, the whole machine stops and can not run again automatically.

2. dehumidifying mode

(1) the working conditions and control measures

a. if $T_{in} > T_{set}+2℃$, it is in cooling running, the indoor motor speed can be selected ,and outdoor motor run at low speed.

b. If $T_{set}-2℃ \leqslant T_{in} \leqslant T_{set}+2℃$,it goes into dehumidifying running ,the indoor motor run at the low speed, 6 minutes later the compressor stops, another 15 seconds later the outdoor fan stops and another 30 seconds later, the indoor motor stops, 3 and a half minutes later, compressor and outdoor fan run again ,indoor motor runs at the low speed, then the machine cycle the above procedures repeatedly. outdoor motor runs at the low speed.

c. If $T_{in} < T_{set}-2℃$, compressor ,outdoor motor and indoor motor stop.

(2) in this mode, the reversing valve is inactive , the temp. setting range is 16~30℃.

(3) Anti-freezing protection.

If $T_{indoor} > T_{set} + 2℃$, it goes into cooling running , anti-freezing function is same with cooling mode, but the compressor must stops for 4 minutes. when it goes into dehumidifying mode, compressor runs 6 minutes , if it detects $T_{eva} < 0℃$,compressor and outdoor motor stop, indoor motor runs at low speed ,after 3 minutes delay ,and $T_{eva} \geqslant 10℃$,it will be back to its original state.

(4) Overload is same as the one in cooling mode.

3. heating mode

(1) the working conditions and control measures

a. If $T_{in} \leqslant T_{set}+2℃$, it goes into heating mode, reversing valve, compressor and outdoor motor all work in the same time, indoor fan will run at the same procedures with anti cool air function.

b. If $T_{in} \geqslant T_{set} + 4℃$, compressor stops first, 15 seconds late, outdoor motor stops ,but reversing valve keeps working, indoor motor run at the procedures of blowing surplus heat.

d. if $T_{set} + 2℃ < T_{indoor} < T_{set} + 4℃$, keep the previous running state.

e. If $T_{outdoor} \leqslant 3℃$, outdoor runs at high speed, if $T_{outdoor} \geqslant 5℃$,outdoor motor runs at low speed .if $3℃ \leqslant T_{outdoor} \leqslant 5℃$,keep the previous running state.

(2) in this mode, the temperature setting range is from 16~30℃.

(3) The working conditions of auxiliary electric heater.

In heating mode, when compressor is working, indoor motor runs at high speed and middle speed . if it detect T_{eva}<50℃ for continuous 8 seconds and T_{indoor} ≤25℃, electric heater will work ,if compressor stop or indoor motor runs at low speed or T_{eva} ≥ 54℃or T_{indoor} ≥ 28℃ or 10 seconds before defrosting , the electric heater will stop.

(4) protections

a .anti cool air

when the machine starts heating and T_{eva} ≥ 22℃, indoor motor runs at low speed, and swing motor makes the louver at the horizontal position(in Bird line, it will swing to the maximum air volume position), if T_{eva}≥ 40℃ or compressor have run 2 minutes ,indoor motor and swing motor will run at the set speed .

b .anti high temp.

in heating mode, if it detect T_{eva} ≥ 56℃(58℃ can be selected), outdoor motor will stop(in this period it will not detect the defrosting temp.). if T_{eva}≤52℃, outdoor motor will be back running (it will not detect defrosting temp. in the first 5 seconds).

c. blowing surplus heat

In heating mode, when set temp is reached ,comp. stops first,15 seconds later outdoor fan stops, Indoor motor blows 90 seconds (60 seconds can be selected) at low speed ,swing motor makes the louver at the horizontal position(in Bird line,it will swing to the maximum air volume postion).

d. Compressor's protection is same with the one in cooling mode.

e. Overload protection

If it detects that the system current surpassed the designed 13 A for continuous 3 seconds, compressor, electric heater and outdoor motor stop , indoor motor runs the same procedures as the blowing surplus heat condition. After 3 minutes and current no more than 13 A, the machine will be back to its original state, indoor motor runs as the anti cool air condition. If it detects overloading state for 3 consecutive times within 30 minutes, the machine stops, and it must be restarted by remote controller.

f. locked motor protection

if it detects no feedback from the PG motor for continuous 15 seconds , compressor , outdoor motor, indoor motor and electric heater will stop, 3 minutes late, the machine will be back to its original state, indoor motor runs as the anti cool air condition. If the motor was locked for 3 consecutive times, the whole machine stops and can not run again automatically.

g. defrosting conditions and procedures

In heating mode, if compressor has run 44 minutes (in its first 6 minutes it will not detect defrosting temp.) , and it has detected T_{con}≤-4℃ for continuous 1 minutes , it begins to defrost , electric heater will stop for 10 seconds (even if electric heater is not working) , then indoor motor stops , reversing valve becomes inactive in another 2 seconds, another 2 seconds later, outdoor motor stops, when T_{con}≥ 10℃or defrosting lasts for 10 minutes , outdoor motor and reversing valve

becomes active , indoor motor will run as the anti cool air condition, then it cycles again, recalculates the compressor's running time again. (In this period , if any protection works ,and after the machine is back to work , it will re-start defrosting state. it will not detect outdoor tube temp when compressor's in its first 6 minutes running)

h.noise lowering protection

When you use RUN/STOP button to switch off the machine, reversing valve will become inactive in 2 minutes.

4. AUTO mode

(1) in AUTO mode, standard cooling T_{set}=25℃, standard heating T_{set}=20℃

(2) working procedures

a. If $T_{indoor} \geqslant T_{set}$ + 1℃, select cooling mode, from this time, the set temp. is 25℃. If $T_{indoor} \leqslant T_{set}$-1℃, compressor and outdoor motor stop, indoor motor runs at the set speed, if T_{set}-1℃< T_{indoor} < T_{set} +1℃, keep the original state.

b. If $T_{indoor} \leqslant T_{set}$+2℃, select heating mode, from this time, the set temp. is 20℃, if $T_{indoor} \geqslant T_{set}$ + 4℃, compressor stops first, outdoor motor stops 15 seconds later , reversing valve is always active, indoor motor runs as the blowing surplus heat condition. If T_{set} +2℃< T_{indoor} < T_{set} +4℃, keeps the original state.

Cooling & heating AUTO mode: in AUTO mode, when the machine is switched from heating mode to the other modes, reversing valve becomes inactive in 90 seconds.

Cooling only AUTO mode: there is no heating function in this mode.

(3) protections

It is same as the one in cooling or heating mode, there is only one exception , the compressor doesn't have at least 5 minutes protection.

E. other controls

1. SWING mode

a. When it is active, the louver returns to position O, close the air outlet.

b. When machine works, it turns to the max. Air output position D, then returns back to position L to stand by (position L is the horizontal place mentioned before).

c. In swing state, the louver swings between position L and position D.

d. When the machine is switched off, it is back to position O.

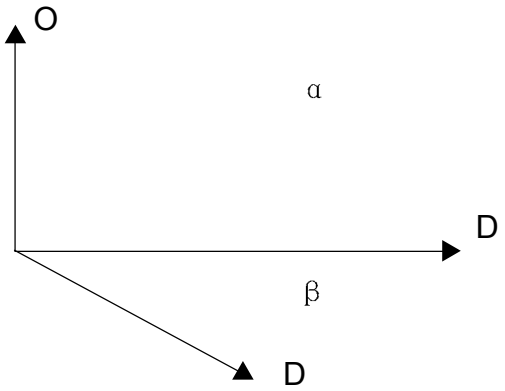

In Gree 2000 line and new 24000BTU line , α =93, β =45
In Bird line, α =80, β =25
Attention : in Bird line, the louver will stop at position D . in other lines, the louver will stop at position L)

Bird line:
a. When it is active, the louver returns to position O, close the air outlet.
b. When machine works, it turns 80 degrees to the max. Air output position D and stands by.
c. In swing state, the louver swings between position L(25) and position D.
d. When the machine is switched off, it is back to position O.

2. beeper
a. When PCB becomes active or receives the signal from the remote controller , the beeper will beep.
b. If thermostat is open-circuited or short-circuited, when you press the TEST button, the beeper will alarm at the frequency 2HZ.
3. indication lamps
it flashes when defrosting begin.
4. multi-step switch .
a. If the switch is in AUTO position, the machine will run at the AUTO mode, if there is a signal from remote controller, it will run according to the signal .
b. If the switch is in TEST position, the machine will run at the COOL mode, indoor motor will run at high speed , swing motor will run according to SWING mode. If there is a signal from remote controller, it will run according to the signal .if the thermostat is open-circuited or short-circuited , the beeper will alarm at the frequency 2 HZ .
c. If the switch is in RUN position , the machine will run according to the remote signal.
d. If the switch is in STOP position, the machine will stop.
5. SLEEP mode.
a. In cooling or dehumidifying mode, 1 hour after you set the sleep timer ,T_{set} will add 1℃automatically, another 1 hour, another 1℃ will be added.
b. In heating mode, 1 hour after you set the sleep timer, T_{set} will lower 1℃automatically, another 1 hour, another 1℃will be lowered .
6. Automatic fan speed .
a. In cooling mode, if $T_{indoor} > T_{set} + 4$℃ high speed
$T_{set} + 2$℃$\leqslant T_{indoor} \leqslant T_{set} + 4$℃ middle speed
$T_{indoor} < T_{set} + 2$℃ low speed

b. b. In heating mode, if $T_{indoor} \leqslant T_{set} - 1$℃ high speed

T_{set} -1℃< T_{indoor} <T_{set} +1℃ middle speed

T_{indoor} ⩾ T_{set} + 2℃ low speed

F. Fresh air function.

1.there are two fresh air modes .

a.fresh air 2

fresh air motor will work 1 hour, then rest 1 hour, then cycle again.

b.fresh air 1

press the button AIR on the remote controller to select fresh air 1 function, the swing motor keeps running till you give a signal to change it.

G. air cleaning

In air cleaning mode, air cleaner works while indoor fan runs and air cleaner stops while indoor fan stops.

The speeds of the wind of all types of the air-conditioner are as below:

000: 900,850, 800, 700 (RPM);

001: 1000, 900, 850, 700(RPM);

010: 1050, 950, 900, 700(RPM);

011: 1100, 1000, 950, 700(RPM);

100: 1200, 1100, 1000, 700(RPM);

101: 1250, 1100, 1050, 700(RPM);

111: 1400, 1200, 1100, 700(RPM);

4.FENGXIA Series

4.1 Summary.

figure 4-1

MODEL	NOTE
KF-70GW/A1 KFR-70GW/A1	CE STANDARD 1Ph 220-230V~50Hz R22
KF-70GW/NA1 KFR-70WN/A1	CE STANDARD 1Ph 220-230V~50Hz R407C
GSW30-22L/A GSW30-22R/A	1Ph 220V~60Hz R22

4.2 Technical specifications.

Table 4-1

Model			KF-70GW/A1	KFR-70GW/A1	
Function			Cooling	Cooling	Heating
Power supply			1Ph-230V-50Hz		
Capacity		W	7000	7000	7500
Rated input		W	2750	2750	2650
Rated current		A	13	13	12.8
Air flow		M^3/h	1080		
Dehumidifying volume		L/h	2.8		
C.O.P(W/W)			2.55	2.55	2.83
Indoor unit	Model		KF-70G/A1	KFR-70G/A1	
	Motor fan speed(r/min)		1420		
	Output power(W)		28		
	Fan type/piece		Cross flow fan-1		
	Diameter-length(mm)		ϕ 108 × 954		
	Evaporator		Aluminum fin-copper tube		
	Row-fin distance(mm)		3-1.5		
	Working area(m^2)		0.28		
	Swing motor		MP35EA		
	Input power(W)		4		
	Fuse(A)		Controllor 3.15A Transformer 0.2A		
	Working capacitor(μF)		3.5		
	Noise(dB(A))		⩽ 51		
	Dimension(width-height-depth)mm		1220 × 360 × 206		
	Net weight(kg)		27kg		
Outdoor unit	Model		KF-70W/A1	KFR-70W/A1	
	Input power	W	2720	2720/2620	
	Current	A	13.0	13.0/12.6	
	L.R.A.	A	65		
	Throttling method		Capillary		
	Compressor		AWG5532EXC/AWG5532EVA		
	Power	W	2680		
	Protector		External overload protection		
	Starting method		By capacitor		
	Working temp.		Exhaust temperature ⩽ 115℃		
	Condenser		Aluminum-copper		
	Pipe-diameter		ϕ 9.52		
	Working area(m^2)		0.6		
	Fan motor speed(rpm)		780		
	Type-piece		Axial fan-1		
	Diameter(mm)		ϕ 455		
	Defrosting method		Auto defrost		
	Noise dB(A)		58		
	Dimension(mm)(width-height-depth)		950 × 840 × 412		
	Net weight(kg)		75		
	Refrigerant charge (kg)		R22 2.5		
Connecting pipe	Outer diameter	Liquid pipe	ϕ 9.52 (3/8”)		
		Gas pipe	ϕ 16(5/8”)		
	Max distance	Height(m)	5		
		Length(m)	10		

The technical date are subject to change without notice .Please refer to the nameplate of the unit.

Table 4-2

Model			KF-70GW/NA1	KFR-70GW/NA1	
Function			Cooling	Cooling	Heating
Power supply			1Ph-220V-230V-50Hz		
Capacity		W	7000	7000	7500
Rated input		W	3250	3250	3200
Rated current		A	15.4	15.4	15.2
Air flow		M^3/h	1080		
Dehumidifying volume		L/h	2.8		
EER(W/W)			2.35	2.35	2.58
Indoor unit	Model		KF-70G/NA1	KFR-70G/NA1	
	Motor fan speed(r/min)		1420		
	Output power(w)		28		
	Fan type/piece		Cross flow fan-1		
	Diameter-length(mm)		ϕ 108 × 955		
	Evaporator		Aluminum fin-copper tube		
	Row-fin distance(mm)		3-1.5		
	Working area(m^2)		0.28		
	Swing motor		MP35EA		
	Input power(W)		4		
	Fuse(A)		Controllor 3.15A Transformer 0.2A		
	Working capacitor(μF)		3.5		
	Noise(dB(A))		⩽ 51		
	Dimension(width-height-depth)mm		1220 × 360 × 206		
	Net weight(kg)		27		
Outdoor unit	Model		KF-70W/NA1	KFR-70W/NA1	
	Input power	W	3220	3220/3170	
	Current	A	15.2	15.2/15.0	
	L.R.A.	A	75		
	Throttling method		Capillary		
	Compressor		C-RN220H5B		
	Power	W	2950		
	Protector		External overload protection		
	Starting method		By capacitor		
	Working temp.		Exhaust temperature ⩽ 115℃		
	Condenser		Aluminum-copper		
	Pipe-diameter		ϕ 9.52		
	Working area(m^2)		0.6		
	Fan motor speed(rpm)		780		
	Type-piece		Axial fan-1		
	Diameter(mm)		ϕ 455		
	Defrosting method		Auto defrost		
	Noise dB(A)		59		
	Dimension(mm)(width-height-depth)		950 × 840 × 412		
	Net weight(kg)		75		
	Refrigerant charge (kg)		2.5		
Connecting pipe	Outer diameter	Liquid pipe	ϕ 9.52 (3/8”)		
		Gas pipe	ϕ 16(5/8”)		
	Max distance	Height(m)	5		
		Length(m)	10		

The technical date are subject to change without notice .Please refer to the nameplate of the unit.

Table 4-3

Model				GSW30-22L/A	GSW30-22R/A	
Function				Cooling	Cooling	Heating
Power supply				1Ph-220V-60Hz		
Capacity			W	7000	7000	7500
Rated input			W	3200	3200	3100
Rated current			A	14.5	14.5	14.1
Air flow			M^3/h	1080		
Dehumidifying volume			L/h	2.8		---
C.O.P (W/W)				2.2	2.2	2.4
Indoor unit	Model			GSW30-22L/A(I)	GSW30-22R/A(I)	
	Motor fan speed(r/min)			1420		
	Output power(W)			28		
	Fan type/piece			Cross flow fan-1		
	Diameter-length(mm)			ϕ 108 × 954		
	Evaporator			Aluminum fin-copper tube		
	Row-fin distance(mm)			3-1.5		
	Working area(m^2)			0.28		
	Swing motor			MP35EA		
	Input power(W)			4		
	Fuse(A)			Controller3.15A Transformer0.2A		
	Working capacitor(μF)			3.5		
	Noise(dB(A))			⩽ 51		
	Dimension(width-height-depth)(mm)			1220 × 360 × 206		
	Net weight(kg)			27		
Outdoor unit	Model			GSW30-22L/A(O)	GSW30-22R/A(O)	
	Input power		W	3170	3170/3070	
	Current		A	14.0	14.0/13.8	
	L.R.A.		A	69		
	Throttling method			Capillary		
	Compressor			CRFQ-0250-PFV-501		
	Power		W	2680		
	Protector			External overload protection		
	Starting method			By capacitor		
	Working temp.			Exhaust temperature ⩽ 115℃		
	Condenser			Aluminum-copper		
	Pipe-diameter			ϕ 9.52		
	Working area(m^2)			0.6		
	Fan motor speed(rpm)			780		
	Type-piece			Axial fan-1		
	Diameter(mm)			ϕ 455		
	Defrosting method			Auto defrost		
	Noise dB(A)			58		
	Dimension(mm)(width-height-depth)			950 × 840 × 412		
	Net weight(kg)			75		
	Refrigerant charge (kg)			R22/2.5		
Connecting pipe	Outer diameter	Liquid pipe	mm	ϕ 9.52(3/8")		
		Gas pipe	mm	ϕ 16(5/8")		
	Max distance	Height	m	5		
		Length	m	10		

The technical date are subject to change without notice .Please refer to the nameplate of the unit.

4.3 Performance curve

Cooling operation
Condition:In testing , indoor and outdoor have same work condition

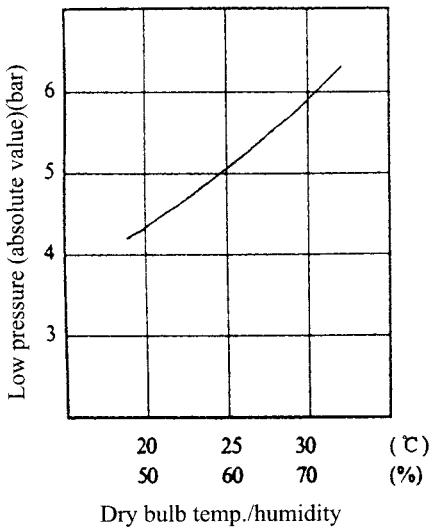

(a)

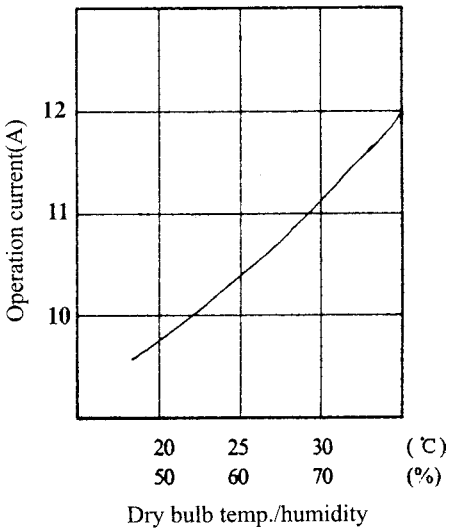

(b)

Heating operation
Indoor work condition:dry bulb temp.21,wet bulb temp.15.5

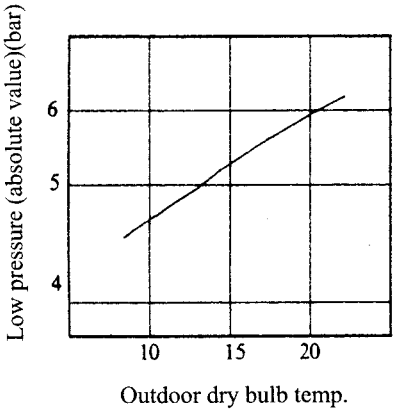

(c)

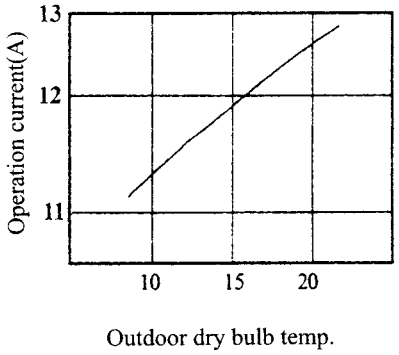

(d)

figure 4-2

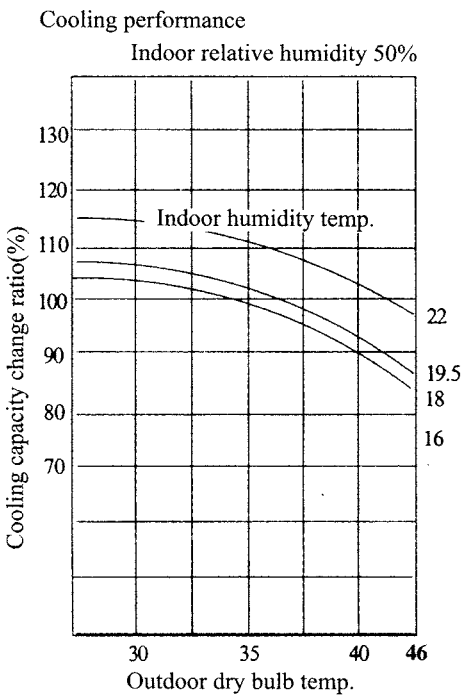

(a)

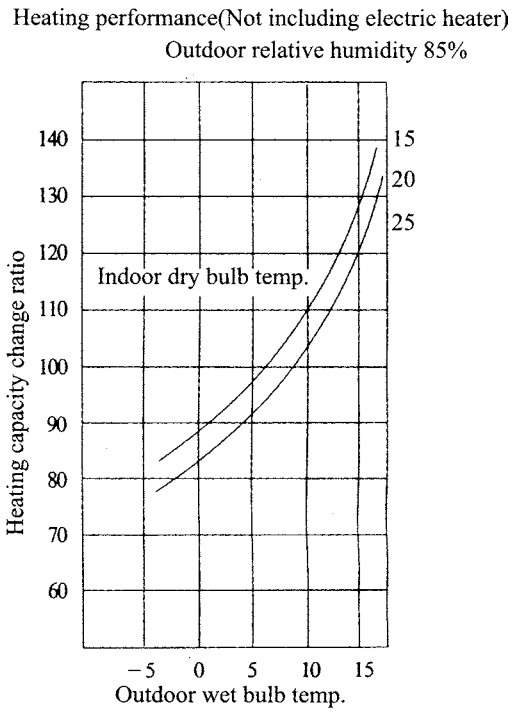

(b)

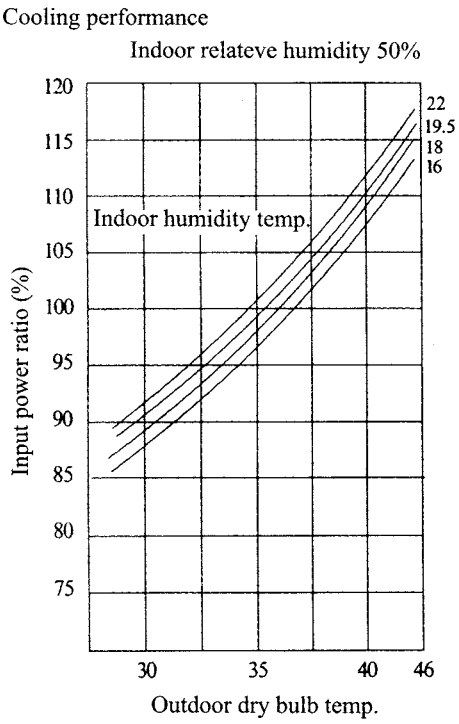

(c)

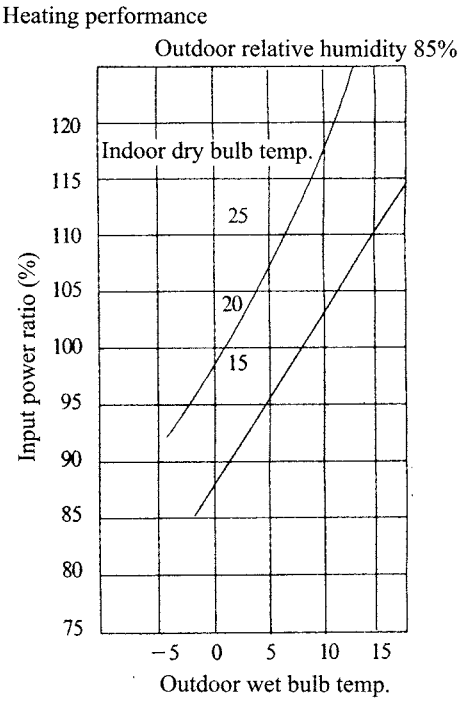

(d)

figure 4-3

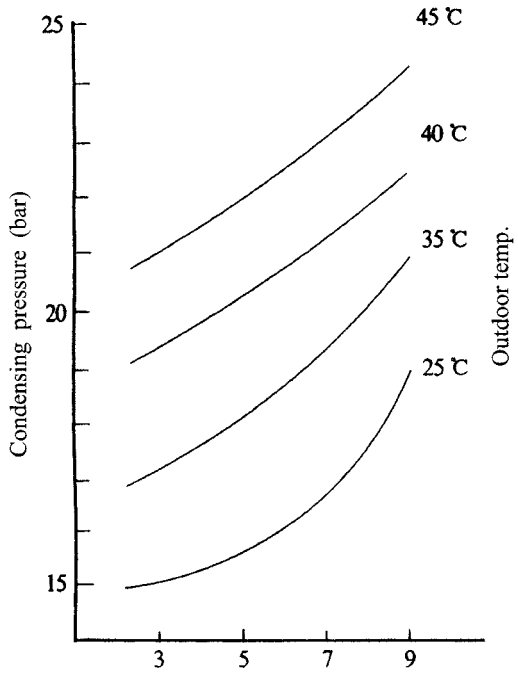

The affection to the charging quantity by pressure under cooling work condition.
Indoor work condition:27℃ dry bulb , 19.5℃ wet bulb

(e)

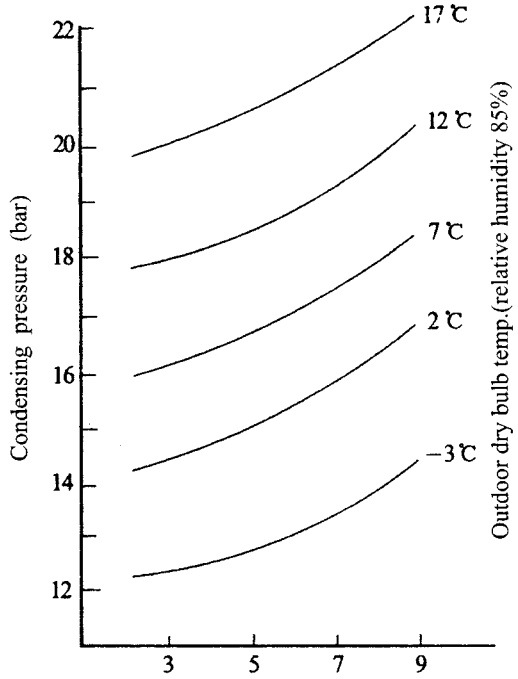

The affection to the charging quantity by pressure under heating work condition.
Indoor work condition:21℃ dry bulb temp.21

(f)

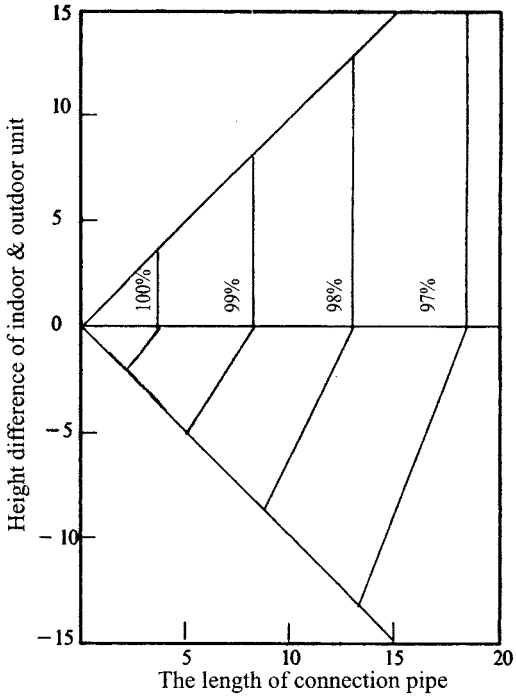

Cooling capacity vary with the length of connection pipe

(g)

figure 4-4

4.4 Outlines and dimensions of indoor unit

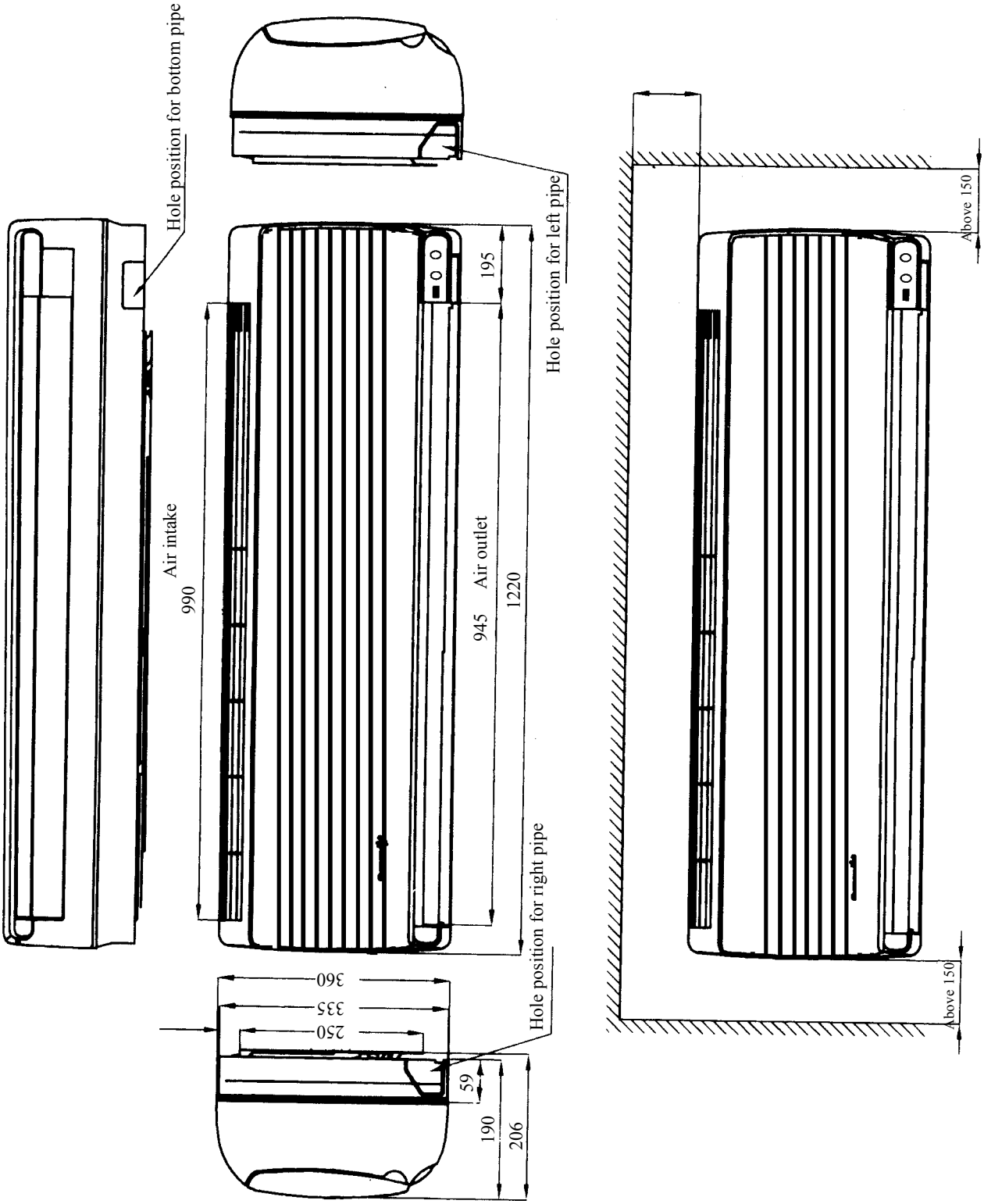

figure 4-5

4.5 Outlines and dimensions of outdoor unit

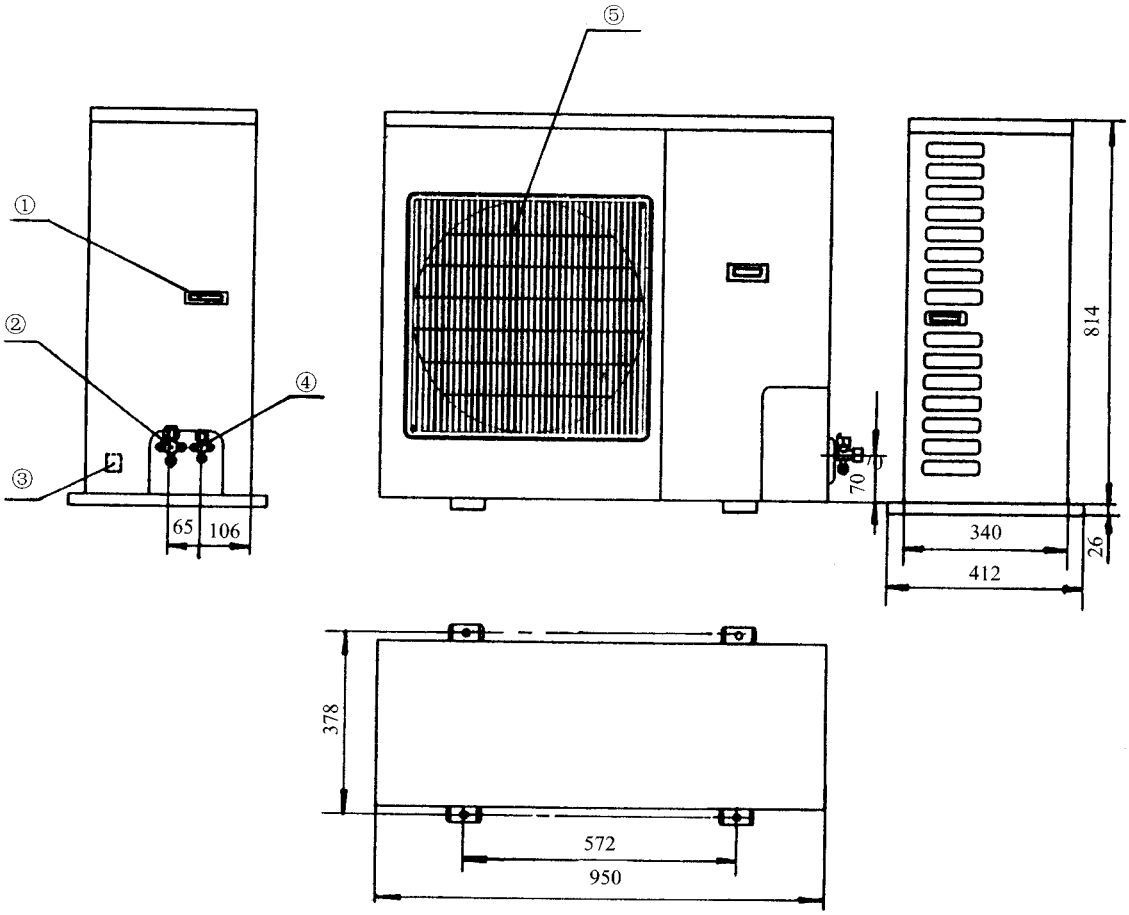

① Handle for moving ② Liguid valve assy. ③ Wire hole ④ Gas valve assy. ⑤ Front panel

figure 4-6

4.6 Explosive view of indoor unit

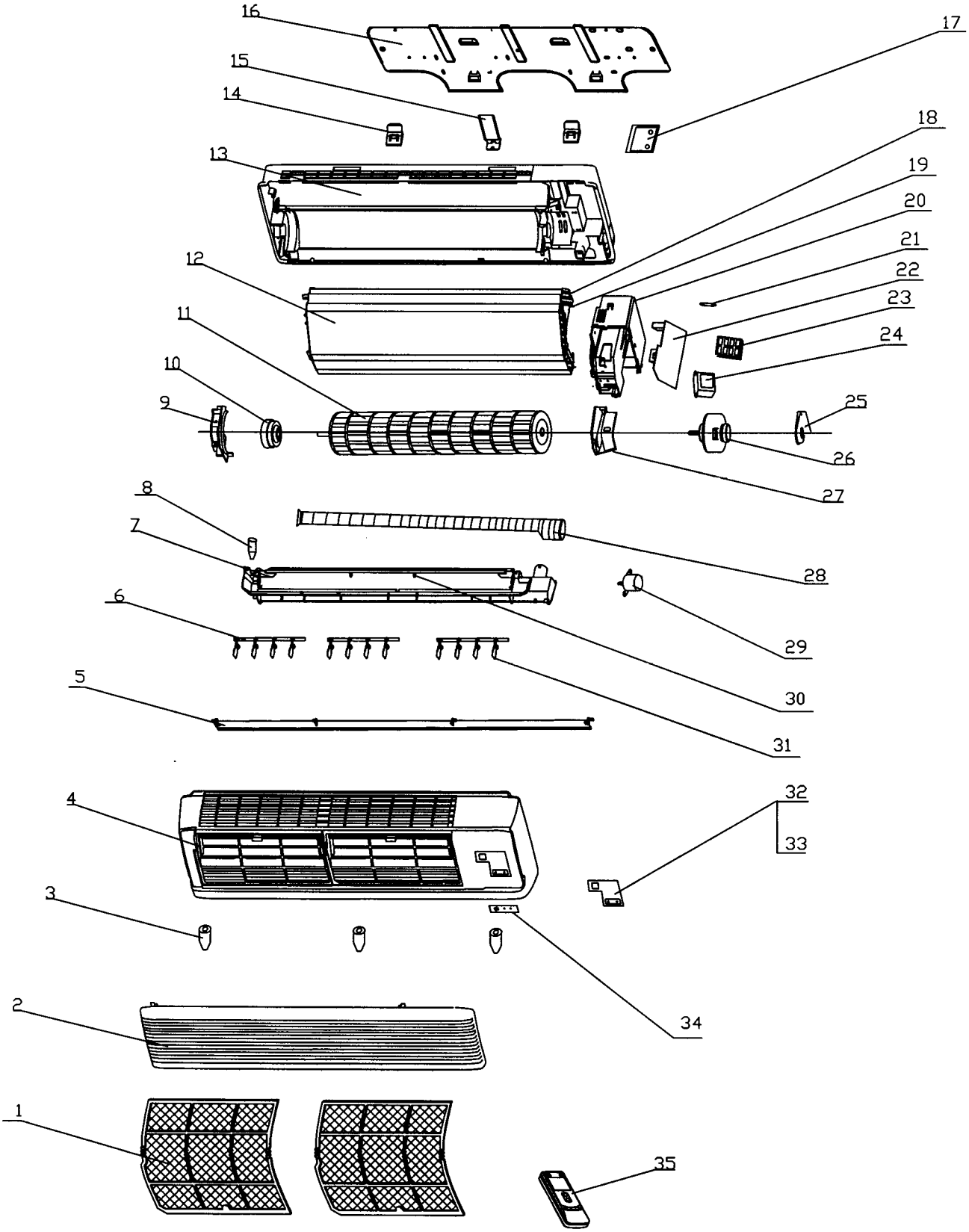

figure 4-7

4.7 Spare parts list of indoor unit

Table 4-4

No	Description		Part No						Qty
			KF-70G/A1	KFR-70G/A1	KF-70G/NA1	KFR-70G/NA1	GSW30-22L/A(I)	GSW30-22R/A(I)	
1	Filter	过滤网	11122005	11122005	11122005	11122005	11122005	11122005	2
2	Front Panel	面板	20002020	20002020	20002020	20002020	20002020	20002020	1
3	Screw cover	螺钉盖	24252002	24252002	24252002	24252002	24252002	24252002	3
4	Front Case	面板体	20002021	20002021	20002021	20002021	20002021	20002021	1
5	Guide Louver	导风板	10512009	10512009	10512009	10512009	10512009	10512009	1
6	Connecting Lever	导风连杆	10582005	10582005	10582005	10582005	10582005	10582005	3
7	Water Tray	接水盘	12412061	12412061	12412061	12412061	12412061	12412061	1
8	Drain Stem	排水口堵头	06812061	06812061	06812061	06812061	06812061	06812061	1
9	Left Evap Supporter	蒸发器左支撑	01072435	01072435	01072435	01072435	01072435	01072435	1
10	Ring of Bearing	贯流风叶轴承胶圈	76512044	76512044	76512044	76512044	76512044	76512044	1
11	Cross Fan Assy	贯流风叶部件	10352395	10352395	10352395	10352395	10352395	10352395	1
12	Evaporator Assy	蒸发器组件	01002018	01002018			01002018	01002018	1
	Evaporator Assy	蒸发器组件			010020181	010020181			
13	Rear Case	底座	26152440	26152440	26152440	26152440	26152440	26152440	1
14	Fixing Hook	底座固定扣	26152442	26152442	26152442	26152442	26152442	26152442	2
15	Rear Pipe Clamp	压管夹	02142204	02142204	02142204	02142204	02142204	02142204	1
16	Wall Mounting Plate	壁挂板	01252205	01252205	01252205	01252205	63262017	01252205	1
17	Pipe Clamp	管夹	02142440	02142440	02142440	02142440	02142440	02142440	1
18	Sensor Suppor	感温头支架	24211121	24211121	24211121	24211121	24211121	24211121	1
19	Sensor Holder	感温头插片 B	42020063	42020063	42020063	42020063	42020063	42020063	1
20	Electric Box	电器盒	20102006	20102006	20102006	20102006	20102006	20102006	1
21	Wire Clamp	电线夹	71010103	71010103	71010103	71010103	71010103	71010103	1
22	PCB 5F51	控制器 5F51	30025186	\	30025186	\	30025186	\	1
22	PCB 5F52	控制器 5F52	\	30025187	\	30025187	\	30025187	1
23	Terminal board	四位接线板 T4B3A	42011233	42011233	42011233	42011233	42011233	42011233	1
24	Transformer SC21C	电源变压器	43110161	43110161	43110161	43110161	43110161	43110161	1
25	Motor Clamp	电机固定卡	02112001	02112001	02112001	02112001	02112001	02112001	2
26	Motor FN25D	电机 FN25D	15012105	15012105	15012105	15012105	/	/	1
26	Motor FN25C	电机 FN25C	/	/	/	/	15012107	15012107	1
27	Right Evap Supporter	蒸发器右支撑	01072436	01072436	01072436	01072436	01072436	01072436	1
28	Drainage Pipe	排水管	05232411	05232411	05232411	05232411	05232411	05232411	1
29	Motor MP35EA	步进电机 MP35EA	15210104	15210104	15210104	15210104	15210104	15210104	1
30	Tray Supporter	接水盘中支撑	12122245	12122245	12122245	12122245	12122245	12122245	2
31	Swing Louver	导风叶片	10512006	10512006	10512006	10512006	10512006	10512006	12
32	Electric Box Cover	接线盖板	22242201	22242201	22242201	22242201	22242201	22242201	1
33	Switch Mask	显示灯标牌	60310178	60310178	60310178	60310178	60310178	60310178	1
34	Indicating Mask	显示接收板	22432200	22432200	22432200	22432200	22432200	22432200	1
35	Remote Controller	遥控器 Y512	30512505	30512505	30512505	30512505	30512505	30512505	1
36	Power Cord	电源线	40020333	40020333	40020333	40020333	40020332	40020332	1
37	Connecting Cable	电源连接线	40020427	40020427	40020427	40020427	40020455	40020455	1
38	Siganl Cable	信号控制线	\	40032103	40032154	40032153	40032144	40032137	1
39	room sensor	室温感温包	39000038	39000038	39000038	39000038	39000038	39000038	1
40	tube sensor	管温感温包	39000118	39000118	39000118	39000118	39000118	39000118	1

The data are subject to change without notice.

4.8 Explosive view of outdoor unit

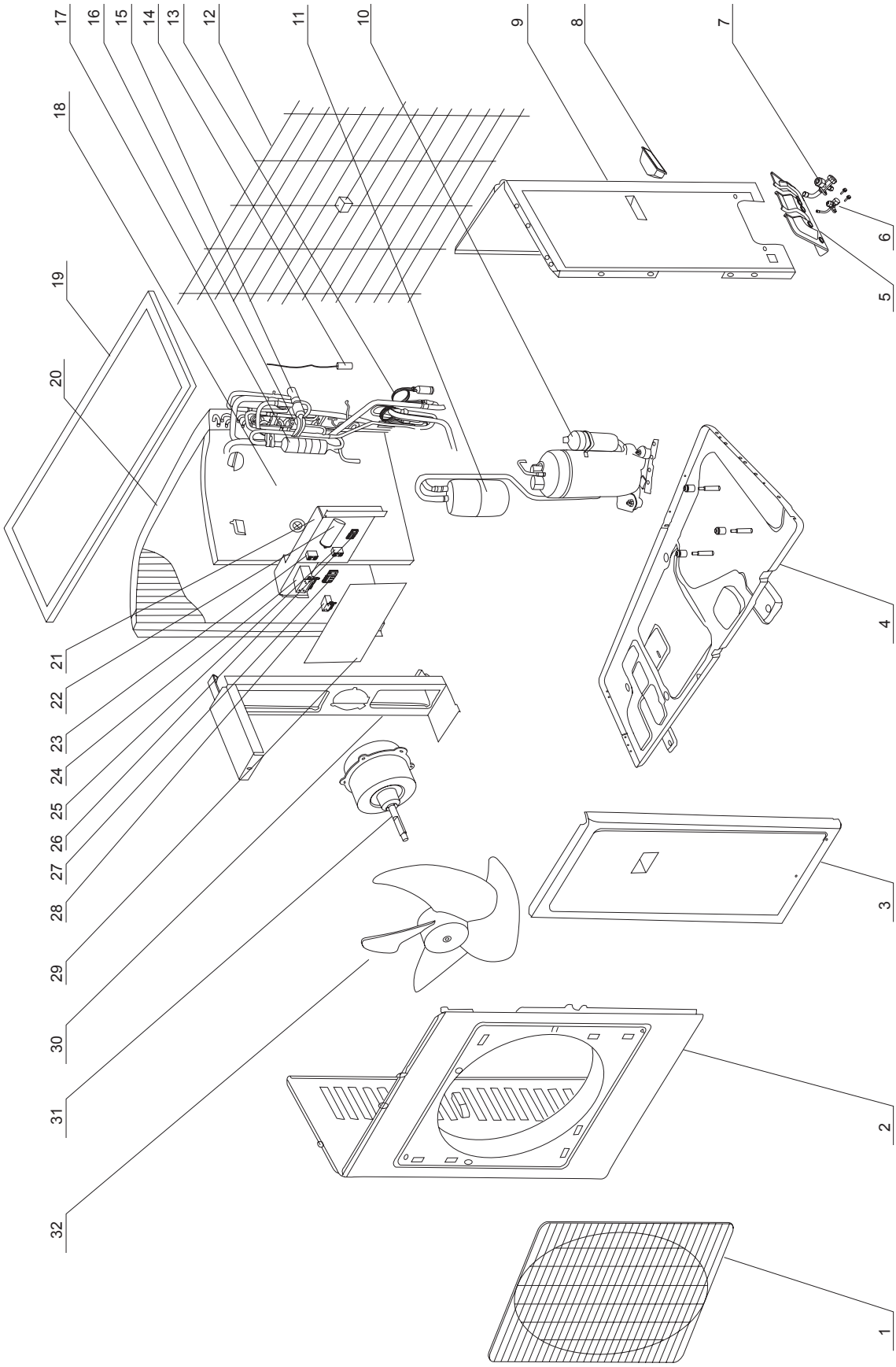

figure 4-8

4.9 Spare parts list of outdoor unit

Table 4-5

No	Description		Part No						Qty
			KF-70W/A1	KFR-70W/A1	KF-70W/NA1	KFR-70W/NA1	GSW30-22L/A(O)	GSW30-22R/A(O)	
1	Front Grill	面罩组件	22265251	22265251	22265251	22265251	22265251	22265251	1
2	Front Plate	外罩	01435253	01435253	01435253	01435253	01435253	01435253	1
3	Front Side plate	前侧板组件	01305018	01305018	01305018	01305018	01305018	01305018	1
4	Metal Base	底盘组件	01205011	01205011	01205250	01205250	01205011	01205011	1
5	Valve Support	阀门支架组件	01715002	01715002	01715002	01715002	01715002	01715002	1
6	Liquid Valve Assy	小阀门组件	07105256	07105256			07105256	07103202	1
	Liquid Valve Assy	小阀门组件			07105002	07105002			
7	Gas Valve Assy	大阀门组件	07105252	07105252			07105252	07105252	1
	Gas Valve Assy	大阀门组件			07105007	07105007			
8	Handle	把手	26235253	26235253	26235253	26235253	26235253	26235253	1
9	Rear Side Plate	后侧板组件	01305262	01305262	01305262	01305262	01305262	01305262	1
10	AWG5532EVA	压缩机及其配件	00100509	00100509	/	/	/	/	1
10	Compressor C-RN220H5B	压缩机及其配件	/	/	00100063	00100063	/	/	1
10	Compressor CRFQ-0250-PFV-501	压缩机及其配件	/	/	/	/	00100062	00100062	1
11	Gas-Liquid Separator	汽液分离器部件	07225001	07225001	07255251	07255251	07255251	07255251	1
12	Rear Grill Assy	网罩(白色)	01475251	01475251	01475251	01475251	01475251	01475251	1
13	Capillary assy	毛细管组件	03003036	03003038	03003107	03003124	03003039	03003123	1
14	Tube Sensor	室外感温头	/	39000006	/	39000006	/	39000006	1
15	4-way Valve	四通阀	/	43000314	/	/	/	43000313	1
	4-way Valve	四通阀	/	/	/	43000305	/	/	1
16	Pressure Switch	压力保护开关	\	\	46020003	46020003	46020003	46020003	1
17	Silencer L220	消音器	07245101	07245101	07245005	07245005	07245101	07245005	1
18	Isolation Sheet Assy	隔板组件	01235253	01235253	01235253	01235253	01235253	01235253	1
19	Top Cover Assy	顶盖组件	01255260	01255260	01255260	01255260	01255260	01255260	1
20	Condenser Assy	冷凝器组件	01105030	01103031			01135030	01135030	1
	Condenser Assy	冷凝器组件			01103043	01103044			1
21	Electric Box	电器盒	01415265	01415265	01415265	01415265	01415265	01415265	1
22	45UF/450VAC	压缩机电容	33010740	33010740	/	/	/	/	1
22	40UF/440VAC	压缩机电容	/	/	33010727	33010727	/	/	1
22	35UF/450VAC	压缩机电容	/	/	/	/	33000032	33000032	1
23	3UF/450VAC	风机电容	33010024	33010024	33010024	33010024	/	/	1
23	Capacitor	风机电容	\	\	\	\	33000033	33000033	
24	Contactor CJX9B-255	双极交流接触器	44010221	44010221	/	/	44010221	44010221	1
24	255/01	双极交流接触器	/	/	44010222	44010222	/	/	1
25	Capacitor 88-108UF	启动电容	33010603	33010603	/	/	/	/	1
25	Capacitor 145-174UF	启动电容	/	/	/	/	33010604	33010604	1
26	Terminal Board 2-8	接线板2-8	42011103	42011103	42011103	42011103	42011103	42011103	1
27	Terminal Board	三位接线板	42011102	42011102	42011102	42011102	42011102	42011102	1
28	Relay 3ARR3U10AS3/JDQ1-6	启动继电器	44020306	44020306	44020306	44020306	44020306	44020306	1
29	Electric Box Cover	电器盒上盖板	01415255	01415255	01415255	01415255	01415255	01415255	1
30	Motor Support	电机支架组件	01705251	01705202	01705251	01705251	01705251	01705251	1
31	Motor LW60B	电机LW60B	15015205	15015205	15015205	15015205	/	/	1
31	Motor FW60F	电机FW60F	/	/	/	/	15013250	15013250	1
32	Axial Flow Fan	轴流风叶	10335254	10335254	10335254	10335254	10335254	10335254	1

The data are subject to change without notice.

4.10 Circuit diagram

These circuit diagrams are subject to change Without notice.
Please refer to the ones stuck on the machines.

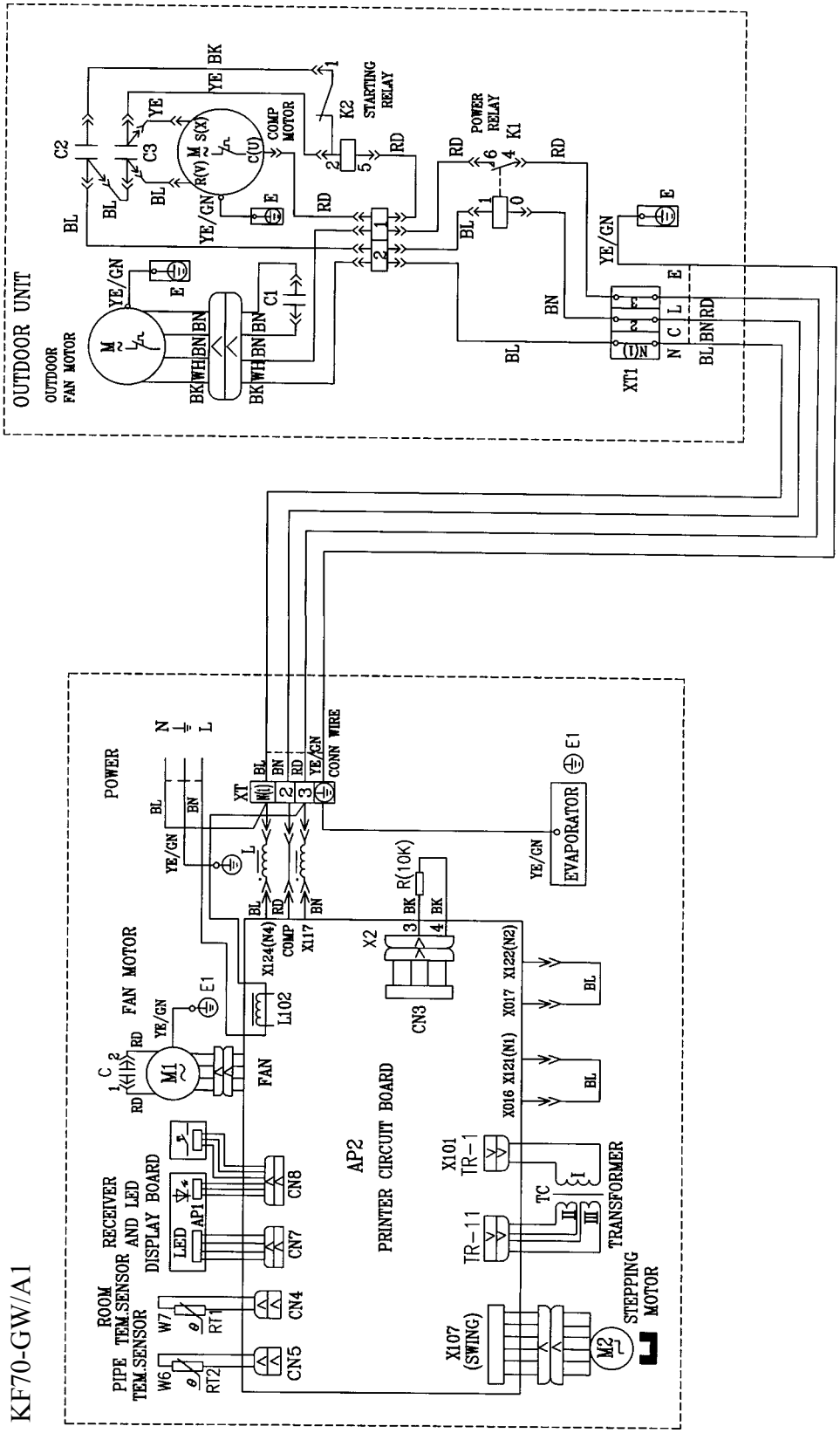

figure 4-9

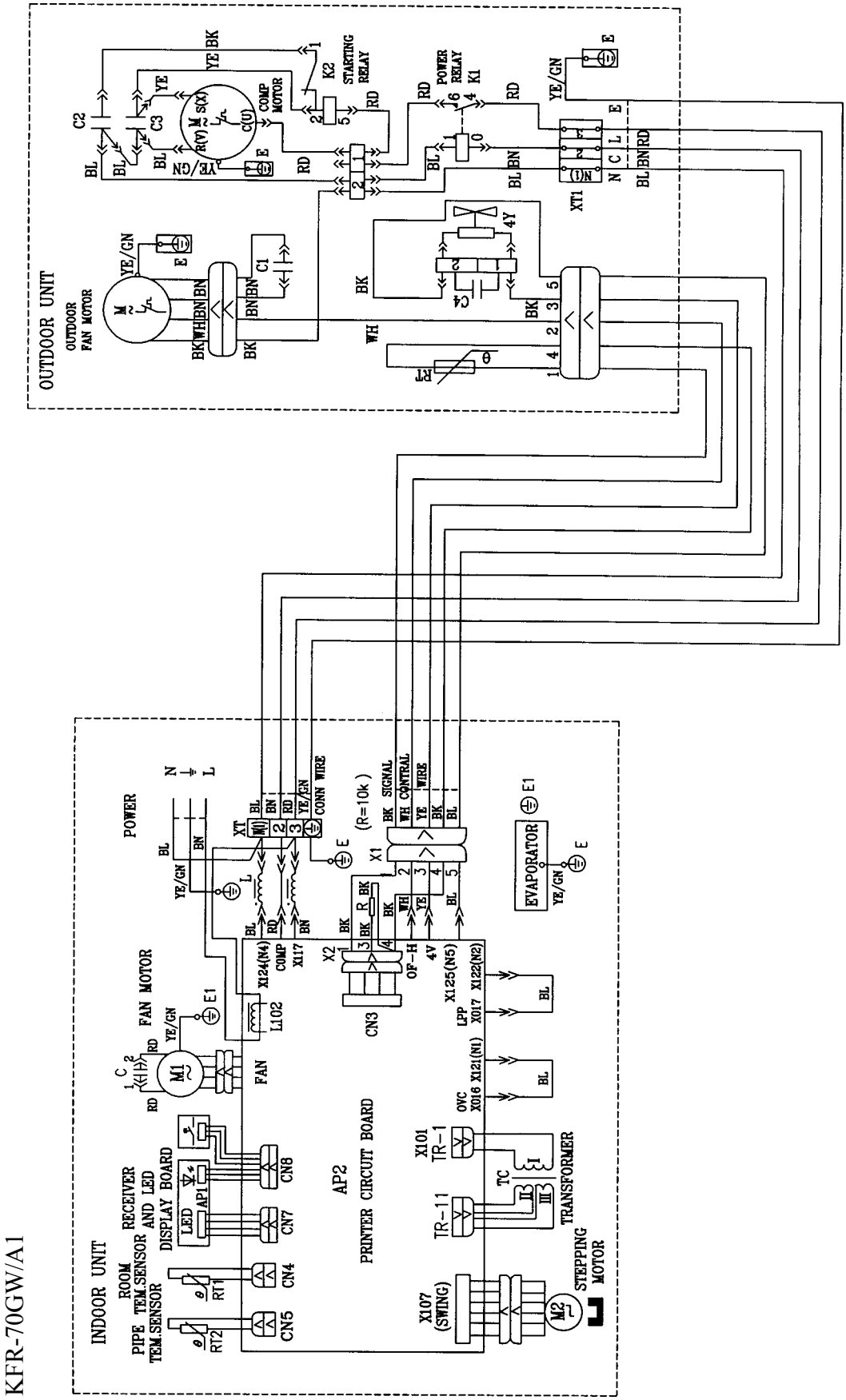

KFR-70GW/A1

figure 4-10

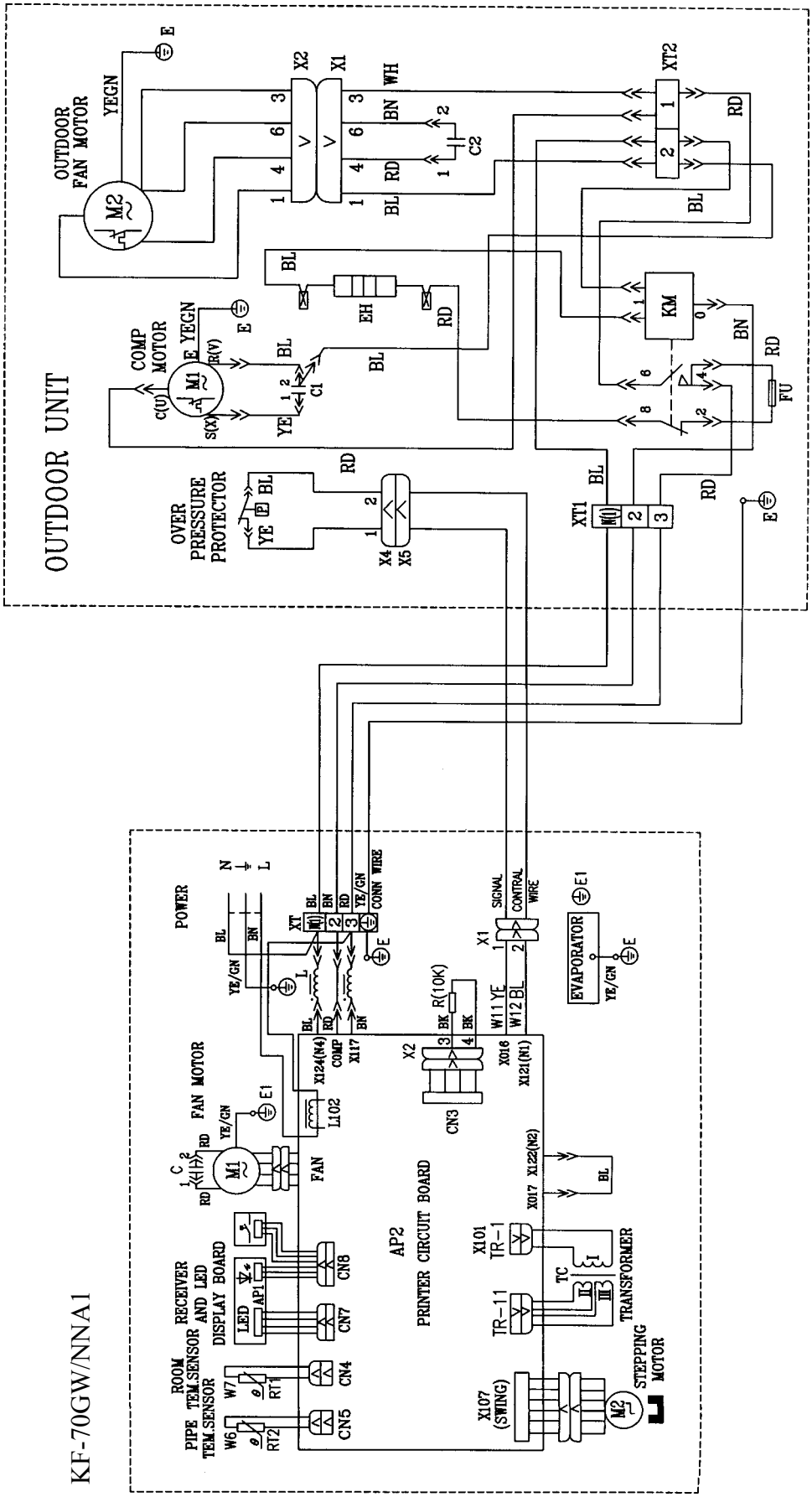
OUTDOOR UNIT
OUTDOOR FAN MOTOR
COMP MOTOR
OVER PRESSURE PROTECTOR
KF-70GW/NNA1
POWER
FAN MOTOR
RECEIVER AND LED DISPLAY BOARD
ROOM TEM.SENSOR
PIPE TEM.SENSOR
AP2
PRINTER CIRCUIT BOARD
EVAPORATOR
TRANSFORMER
STEPPING MOTOR
CONN WIRE
SIGNAL
CONTRAL
WIRE

figure 4-11

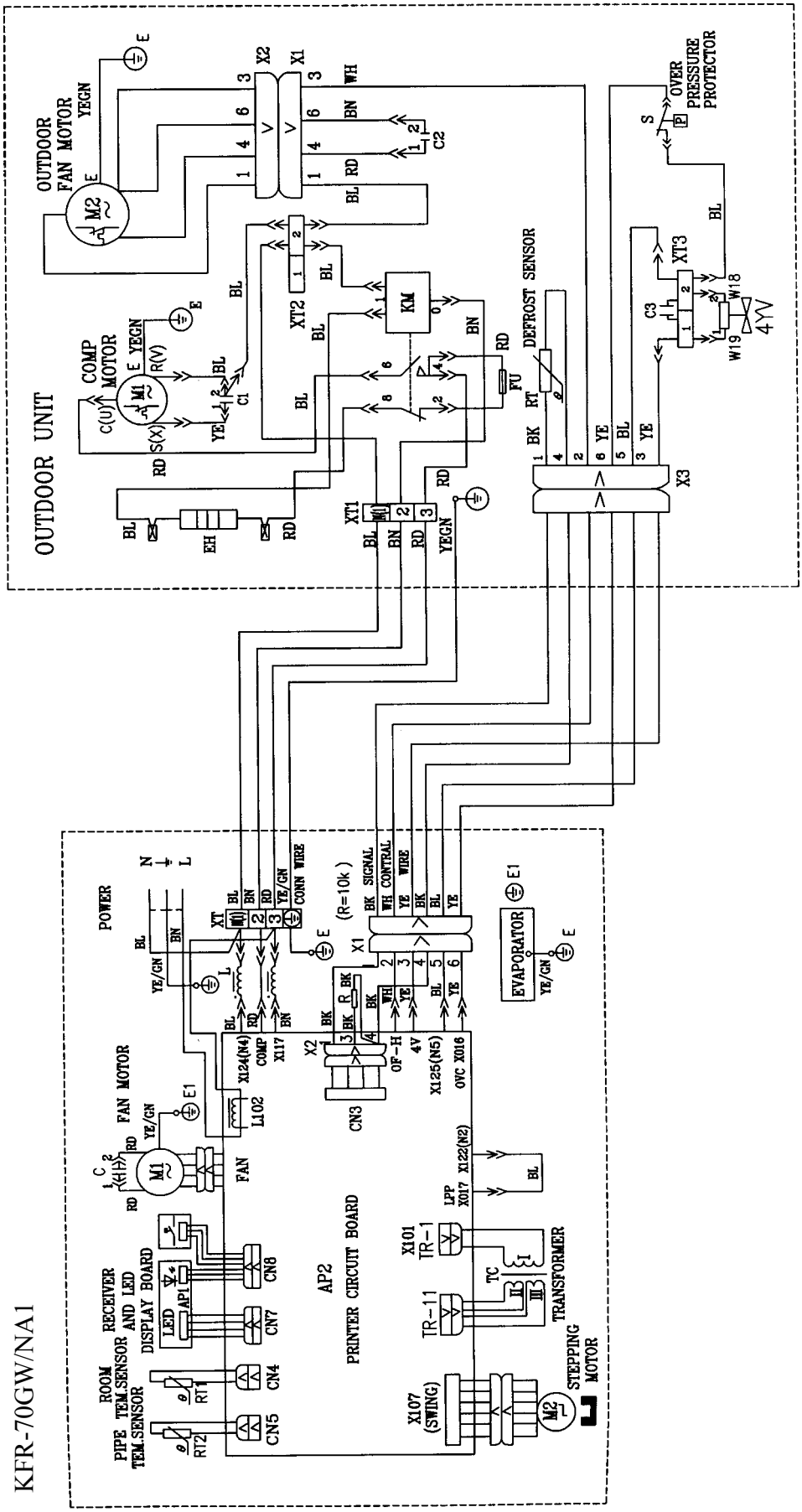
KFR-70GW/NA1
OUTDOOR UNIT
OUTDOOR FAN MOTOR
COMP MOTOR
DEFROST SENSOR
OVER PRESSURE PROTECTOR
POWER
FAN MOTOR
ROOM TEM.SENSOR
PIPE TEM.SENSOR
RECEIVER AND LED DISPLAY BOARD
AP2
PRINTER CIRCUIT BOARD
TRANSFORMER
STEPPING MOTOR
EVAPORATOR
(R=10k)

figure 4-12

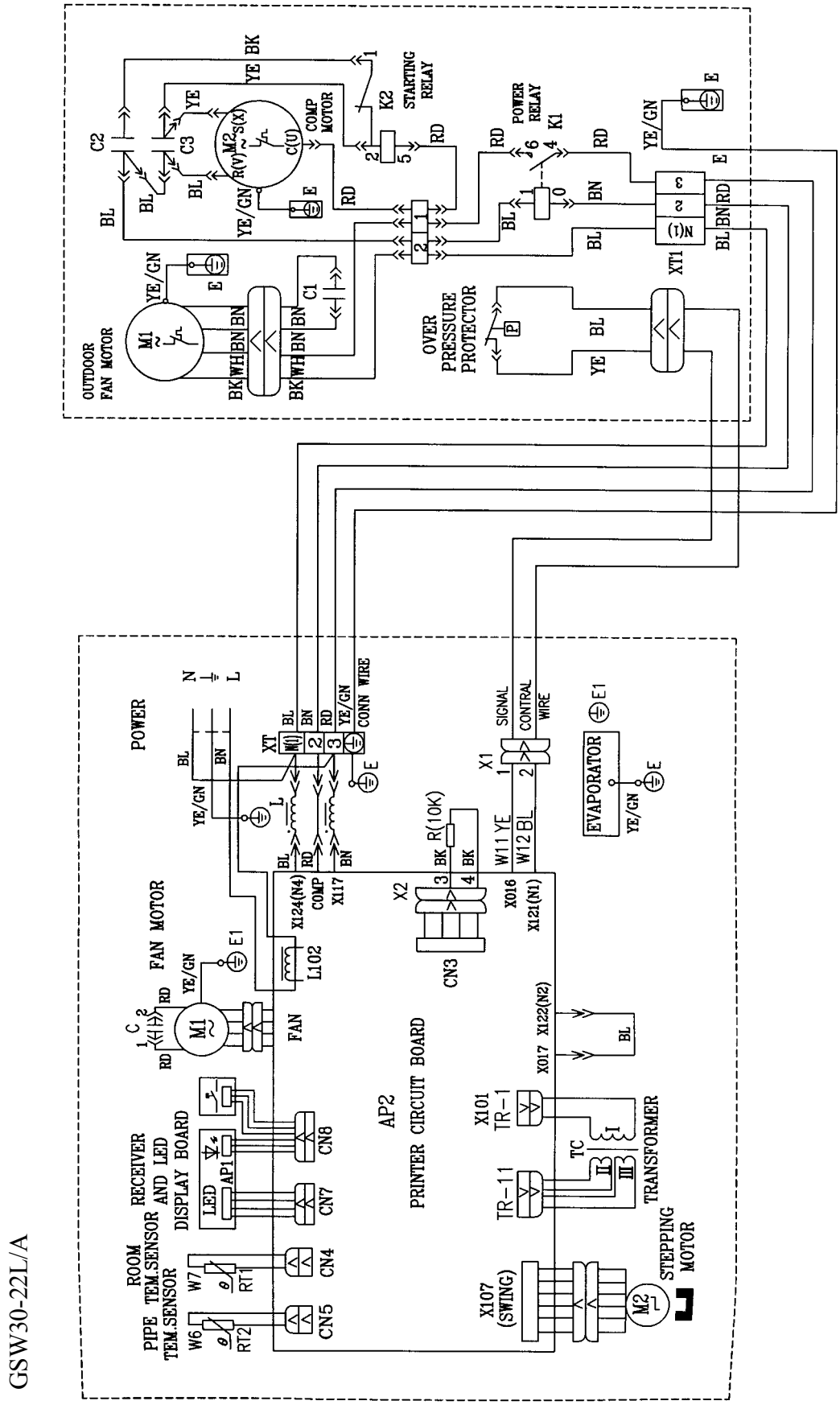

GSW30-22L/A

figure 4-13

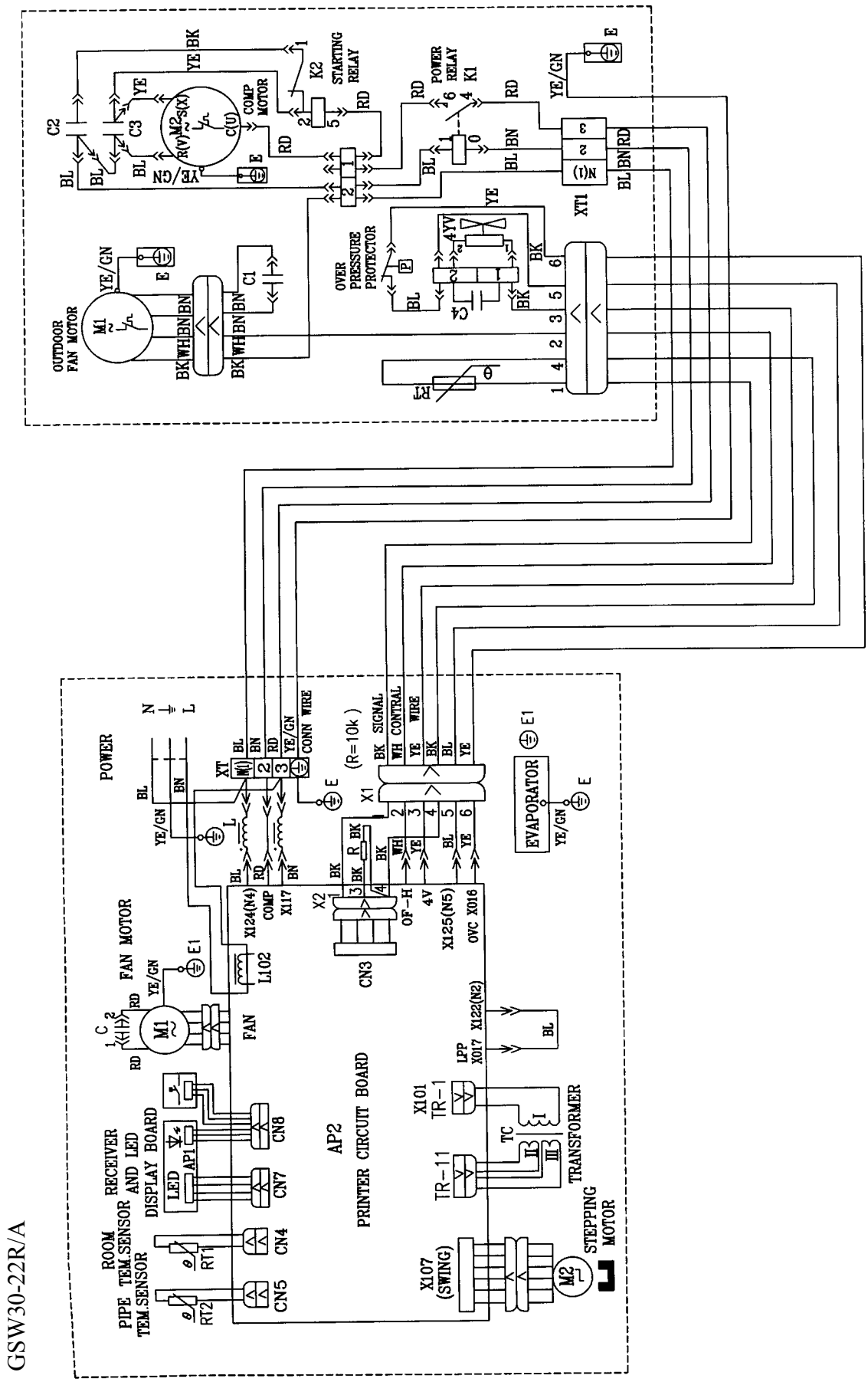
GSW30-22R/A
OUTDOOR FAN MOTOR
OVER PRESSURE PROTECTOR
STARTING RELAY
POWER RELAY
COMP MOTOR
XT1
POWER
FAN MOTOR
RECEIVER AND LED DISPLAY BOARD
ROOM TEM.SENSOR
PIPE TEM.SENSOR
AP2
PRINTER CIRCUIT BOARD
TRANSFORMER
STEPPING MOTOR
EVAPORATOR
CONN WIRE
SIGNAL CONTRAL WIRE
(R=10k)

figure 4-14

4.11 PCB function manual

PCB function manual of FENGXIA Split Air-conditioner

1. **Running mode:**
   1) AUTO; 2) COOL; 3) HEAT; 4) DRY; 5) FAN.
2. **Controlling contents:**
   1) indoor unit fan motor(high, middle and low speed);
   2) sweep fan motor;
   3) outdoor unit fan motor(high and low);
   4) compressor;
   5) reversing valve;
   6) electrical heater;
3. **The parameter to be input:**
   1) the ambient temperature of the indoor unit (shorten form is T_{in});
   2) the evaporator temperature of the indoor unit (shorten form is T_{eva});
   3) the condenser temperature of the outdoor unit (shorten form is T_{con});
   4) the ambient temperature of the outdoor unit (shorten form is T_{out});
   5) the temperature of the gas output from the compressor (shorten form is T_{output}).
4. **The different controlling mode for the different function mode:**

   Under all of the modes, the compressor will continue work for 6 min once it starts. And it will be restart in 3min after it stops.

   1) Cooling mode:

      If $T_{in} \geqslant T_{set}+1$℃, cooling mode act, compressor and outdoor unit run, and indoor unit run in the set speed;

      If $T_{in} \leqslant T_{set}-1$℃, the unit will be stop from cooling mode, compressor and outdoor unit stop, and indoor unit still run in the set speed;

      If $T_{set}-1$℃ $< T_{in} <$ $T_{set}+1$℃, keep running in the old mode;

      In the cooling mode, the range of T_{set} is 16℃~30℃.
   2) Drying mode:

      If $T_{in} > T_{set}+2$℃, drying mode act, compressor, indoor unit fan motor and outdoor unit fan motor run, The indoor unit fan motor runs in low speed;

      If $T_{set}-2$℃ $\leqslant T_{in} \leqslant T_{set}+2$℃, compressor, indoor unit fan motor and outdoor unit fan motor run for 6min, then stop for 4min, then run by this cycle. The indoor unit fan motor runs in low speed;

      If $T_{in} < T_{set}-2$℃, compressor, outdoor unit fan motor and indoor unit fan motor stop.

      In drying mode, the range of T_{set} is 16℃~30℃.
   3) Heating mode:

      If $T_{in} \leqslant T_{set}-1$℃, heating mode act, reversing, compressor and outdoor unit fan motor run,

indoor unit fan motor runs in the set speed and the condition of avoiding the cold wind;

If $T_{in} \geqslant T_{set}+1$℃, compressor and outdoor unit fan motor stop, reserving valve is still electric ,the indoor unit fan motor runs in the set speed and flow the rest heat;

If $T_{set}-1$℃ $< T_{in} < T_{set}+1$℃, keep running in the old mode;

In the heating mode, the range of T_{set} is 16℃~30℃.

In the heating mode, the 4-way valve will be electroless in 2min after the unit is turned off.

The conditions of avoiding cold wind:

Once the compressor work, either $T_{eva} \geqslant 42$℃ or the compressor running for over 30sec, the indoor unit fan motor run in the old speed, 6min later, if $T_{eva} \leqslant 35$℃, indoor unit fan motor run in low speed, if 35℃ $< T_{eva} <$ 42℃, keep speed.

The conditions of flowing hot wind:

Once the compressor is stop, the indoor unit fan motor runs in low speed and will stop too in 90sec.

The conditions of beginning defrosting:

After the unit continue heating for 44min or if $T_{con} \leqslant$ -5℃ for 1min, the defrosting mode act, running light flash, reversal valve, indoor and outdoor unit stop.

If there is electrical heater in the unit, then it will be stop first and the reversal valve, the indoor and outdoor unit stop in 10sec.

The conditions of stopping defrosting:

After the unit continue defrosting for 10min or if $T_{con} \geqslant 10$℃, the defrosting stop, the reversal valve, the outdoor unit run, and the indoor unit fan motor will run in the the condition of avoiding the cold wind.

The working condition of electrical heater:

When the indoor unit is running in high or middle speed, and $T_{eva} \leqslant 49$℃ and $T_{in} \leqslant 25$℃, electrical heater act.

When the indoor unit is stop, or $T_{eva} \geqslant 54$℃ or $T_{in} \geqslant 28$℃, or $T_{in} \geqslant T_{set}$, the electrical heater stop and will restart in 2min.

4) Fanning mode:

The indoor unit fan motor runs in the set fan speed:

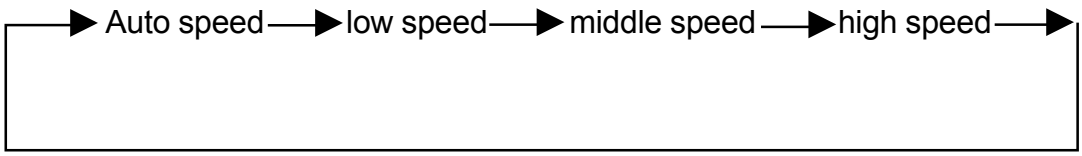

The range of is 16℃~30℃.

5) Auto mode:

It runs according the T_{in}.

If $T_{in} >$ 26℃, cooling mode act, the T_{set} is 26℃.

If $T_{in} <$ 20℃, heating mode act, the T_{set} is 20℃.

If 20℃≤T_{in}≤26℃, running in the old mode.

If the unit is cooling only, if T_{in}＜20℃, fanning mode act, the T_{set} is 20℃.

Once the each mode act, it will be in 30sec to change to the auto mode according the T_{in}.

5. Timer and sleep mode:

1) Sleep mode:

If it is cooling or drying, in 1hour of the beginning, the T_{set} will be increased 1℃, and it will be increased 1℃ after 2hour, then the unit runs in this temperature.

If it is heating, in 1hour of the beginning, the T_{set} will be decreased 1℃, and it will be decreased 1℃ after 2hour, then the unit runs in this temperature.

There is no sleep mode when fanning and auto mode act.

2) Timer for Turn on:

The unit is stop when the timer for turn on is acted, when it is time to turn on, the controller will act in the set mode. The distance of setting twice is 0.5hour and the range time is 0.5~24hour.

3) Timer for Turn off:

The unit is run when the timer for turn off is acted, the unit is stop when it time to turn off. He distance of setting twice is 0.5hour and the range time is 0.5~24hour.

6. Other functions:

1) Sweeping:

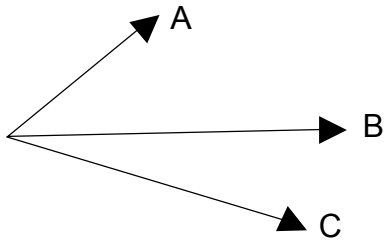

a. When unit is turned on, guider revolve anti-clockwise to A then revolve deasil to C.

b. When unit is turned on (sweeping mode does not act), guider revolve to A then stop; if sweeping mode act, guider revolve between A and B. Now, guider can be stop or not by remote control; it is valid only when indoor unit fan motor run.

c. When unit is stop, guider revolve to C to shut the air-let.

2) Buzzer function:

It will be act when the controller is turned on or received a right signal.

3) Auto fan speed of indoor unit:

When heating act:

If T_{in}≥T_{set}, the indoor unit fan motor runs in low fan speed;

If T_{set}-3℃≤T_{in}＜T_{set}, it is middle fan speed;

If T_{in}＜T_{set}-3℃, it is high fan speed.

When cooling act:

If T_{in}≤T_{set}, it is low fan speed;

If $T_{set} < T_{in} \leqslant T_{set}+3^{\circ}C$, it is middle fan speed;

If $T_{in} > T_{set}+3^{\circ}C$, it is high fan speed.

When fanning act:

If $T_{in} \leqslant T_{set}$, it is low fan speed;

If $T_{set} < T_{in} \leqslant T_{set}+3^{\circ}C$, it is middle fan speed;

If $T_{in} > T_{set}+3^{\circ}C$, it is high fan speed.

The indoor unit fan motor will run by the rules till it runs for 30sec after the unit is turned on.

4) Indicator light:

Running indicator light (red):

It flashes once when the unit is turned on, light is turned on when the unit is turned on and turned off when the unit is turned off.

Mode indicator light (yellow/ green):

It is yellow when it is heating.

It is green when it is cooling.

It is turned off when others modes act.

7. The protecting functions:

1) The protection of avoiding freeze:

In cooling or drying mode, after compressor run for 10min, if $T_{eva} \leqslant 0^{\circ}C$ for 3min, running indicator light flash, compressor stop, outdoor unit fan, indoor unit fan and sweeping fan keep the old mode. If $T_{eva} \geqslant 10^{\circ}C$, and compressor is stop for 3min, running indicator light turn off, PCB run in the set mode.

Buttons won't be screened when protection of avoiding freeze act.

2) Compressor high voltage protection:

All of the load will be stop when the protection act for 3sec, screen all of the buttons and control signal, running indicator light flash; when the protection is canceled for 6sec, all the screen will be canceled, running indicator light still flash. Press the "ON/OFF" button to turn off the light. Press the button once more to restart.

3) Low voltage protection:

a. In 3min later after compressor start, if the low voltage switch is turn off for 3min, then unit stop, running indicate light flash, 3min later, resume to run automatically. If this protection act twice, running indicate light flash and can not resume automatically in order to mention the user that the unit is leakage; it must press the ON/OFF button to stop the unit and press once more to restart;

b. It won't test the low voltage switch digital when defrosting mode act until 10min later after defrosting stop;

c. Press auto and test buttons together can shield the digital of low-voltage to collect the gas, 6min later or press ON/OFF button to resume test automatically;

d. If $T_{out} \leqslant 0^{\circ}C$ when heating, shield the test function;

e. If compressor stop and outdoor unit fan motor run when heating, shield the digital of low-

voltage until outdoor unit fan motor run;

f. Compressor stop and low-voltage switch turn off for 30sec, unit stop and running indicate light flash, unit can not restart automatically unless press ON/OFF button twice.

4) Protection for avoiding too high temperature of outlet pipe:

After compressor start, if $T_{out} \geqslant T_2$ (T_2=120℃,125℃,130℃), or if there is any trouble in outlet pipe sensor, running indicate light flash.

If $T_{in}=T_{set}$, unit stop.

If $T_{out} < 90$℃ after compressor stop for 3min, unit restart.

Unit can not restart unless this protection act twice. Running indicate light flash.

Press ON/OFF button twice to run the unit in set mode.

5) Protection for avoiding too high temperature of indoor:

If $T_{eva} \geqslant 58$℃ for 4sec when heating, outdoor unit fan motor stop, if $T_{eva} \leqslant 52$℃, outdoor unit fan motor restart.

6) Protection for low-voltage

If current≥25A for 3sec after compressor start, unit will stop when $T_{in}=T_{set}$, then restart in 3min later. If this protection act more than 6 times, unit can not restart automatically, it must restart it by pressing ON/OFF button.

8. Buttons:

If unit is for cooling only, when press “heating” button, it just fan.

1)TEST button:

Press this button when unit is stop, cooling mode act, indoor and outdoor unit fan motor run in high speed. Press this button more than 1sec, heating mode act, indoor and outdoor unit fan motor run in high speed. If $T_{in} \leqslant -10$℃ or $T_{in} \geqslant 80$℃, buzzer ring; if $T_{eva} \leqslant -13$℃ or $T_{in} \geqslant 74$℃, buzzer ring.

Press this button when unit is running, unit will stop.

2) AUTO button:

Press this button when unit is stop, unit will run in auto mode. Unit will stop if press this button when unit is running,

9. Memory function:

Memory include: mode, sweep, T_{set}, set speed.

Unit will restart in old mode by memory function after power is turned off.

5.Butterfly Series

5.1 Summary.

figure 5-1

MODEL	NOTE
KF-23GW/A103	
KFR-23GW/A103	1Ph 220V~50Hz
KF-26GW/A103	R22
KFR-26GW/A103	

5.2 Technical specifications.

Table 5-1

Model			KF-23GW/A103	KFR-23GW/A103	
Function			Cooling	Cooling	Heating
Power supply			1N,50Hz,220~		
Capacity(W)			2300	2300	2600
Rated input(W)			800	800	820
Rated current(A)			3.7	3.7	3.8
Air flow(m^3/h)			400	400	400
Dehumidifying volume(L/h)			0.8	0.8	---
EER(W/W)			2.87	2.87	3.17
Indoor unit	Model		KF-23G/A103	KFR-20G/A103	
	Motor fan speed(rpm)		1120/920		
	Output power(w)		13		
	Fan type/piece		Cross flow fan-1		
	Diameter-length		ϕ 97mm-538		
	Evaporator		Aluminum fin-copper tube		
	Row-fin distance(mm)		2-1.5		
	Working area(m^2)		0.13		
	Swing motor		MP24GA		
	Input/Power(W)		2		
	Fuse(A)		Controller 3.15A Transformer 0.2A		
	Working capacitor(μ F)		1		
	Noise(dB(A))		37		
	Dimension(width-height-depth)(mm)		710-250-180		
	Net weight(Kg)		7		
Outdoor unit	Model		KF-23W/A103	KFR-23W/A103	
	Input power(W)		770	770	790
	Current(A)		3.5	3.5	3.6
	L.R.A.(A)		12	15	
	Throttling method		Capillary		
	Compressor model		Rotary		
	Compressor		KH145VFRC	PH150 × 1C-8DZC2	
	Starting method		Capacitor starting		
	Working temp.		⩽ 115℃		
	Condenser		Aluminum fin-copper tube		
	Pipe-diameter		9.52	9.52	
	Row-fin distance(mm)		1-1.6		
	Working area		0.3		
	Fan motor power(W)speed(rpm)		20/950		
	Type-piece		Axial fan-1		
	Diameter(mm)		320		
	Defrosting method		Auto defrost		
	Noise(dB(A))		50		
	Dimension(width-height-depth)(mm)		720-430-260		
	Net weight(Kg)		25		
	Refrigerant charge(kg)		R22/0.55	R22/0.75	
Connecting pipe	Length(m)		4		
	Outer diameter of connecting pipe	Liquid pipe(mm)	6(1/4")		
		Gas pipe(mm)	9.52(3/8")		
	Max distance	Height(m)	5		
		Length(m)	10		

The technical date are subject to change without notice .Please refer to the nameplate of the unit.

Table 5-2

Model			KF-26GW/A103	KFR-26GW/A103	
Function			Cooling	Cooling	Heating
Power supply			1N,50Hz,220~		
Capacity(W)			2600	2600	3100
Rated input(W)			920	930	1030
Rated current(A)			4.2	4.2	4.7
Air flow(m^3/h)				400	
Dehumidifying volume(L/h)			1.2	1.2	---
EER(W/W)			2.8	2.8	3.0
Indoor unit	Model		KF-26G/A103	KFR-26G/A103	
	Motor fan speed(rpm)		1120/920		
	Output power(w)		13		
	Fan type/piece		Cross flow fan-1		
	Diameter-length		ϕ 97mm-538		
	Evaporator		Aluminum fin-copper tube		
	Row-fin distance(mm)		2-1.5		
	Working area(m^2)		0.13		
	Swing motor		MP24GA		
	Input/Power(W)		2		
	Fuse(A)		Controller 3.15A Transformer 0.2A		
	Working capacitor(μ F)		1		
	Noise(dB(A))		⩽ 37		
	Dimension(width-height-depth)(mm)		710-250-180		
	Net weight(Kg)		7		
Outdoor unit	Model		KF-26W/A103	KFR-26W/A103	
	Input power(W)		890	900	
	Current(A)		4.0	4.1	
	L.R.A.(A)		18	21	
	Throttling method		Capillary		
	Compressor		PH165 ×1C-8DZC2	RH174VHAC	
	Starting method		Capacitor starting		
	Working temp.		⩽ 115℃		
	Condenser		Aluminum fan-copper tube		
	Pipe-diameter		9.52		
	Row-fin distance(mm)		1-1.6	2-1.6	
	Working area		0.3	0.3	
	Fan motor power(W)speed(rpm)		20/950	20/950	
	Type-piece		Axial fan-1		
	Diameter(mm)		320		
	Defrosting method		Auto defrost		
	Noise(dB(A))		50		
	Dimension(width-height-depth)(mm)		720-430-260		
	Net weight(Kg)		25		
	Refrigerant charge(kg)		R22/0.60	R22/0.9	
Connecting pipe	Length(m)		4		
	Outer diameter of connecting pipe	Liquid pipe(mm)	6(1/4")		
		Gas pipe(mm)	9.52(3/8")		
	Max distance	Height(m)	5		
		Length(m)	10		

The technical date are subject to change without notice .Please refer to the nameplate of the unit.

5.3 Performance curve

•The change relation between low pressure , operation current and temp.

Cooling operation condition :In testing , indoor and outdoor have same work condition.

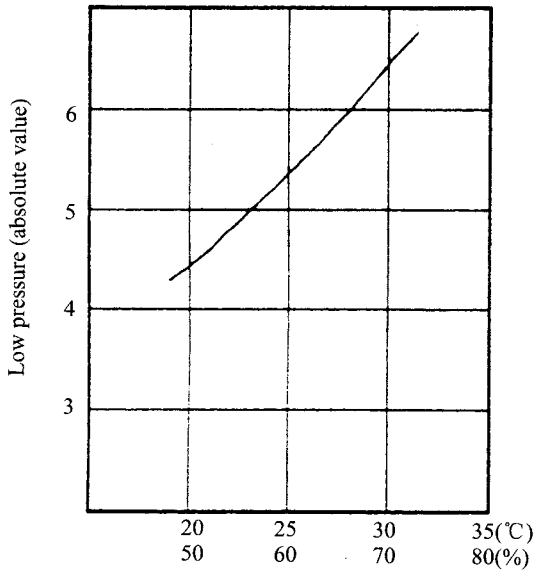

Dry bulb temp. / humidity

(a)

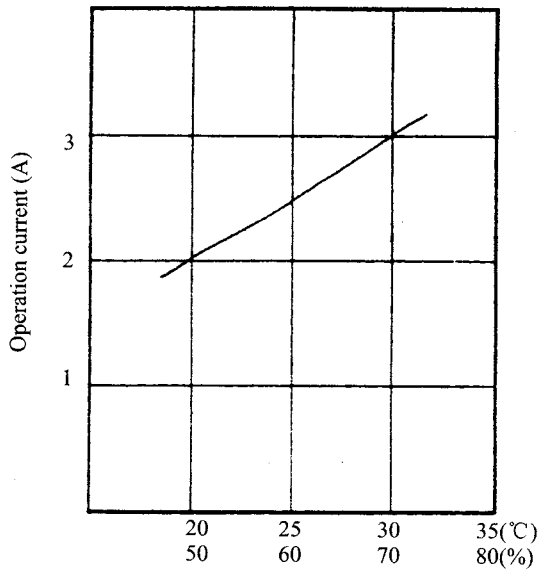

Dry bulb temp. / humidity

(b)

Heating operation

Indoor work condition : dry bulb temp. 21 ,wet bulb temp. 15.5

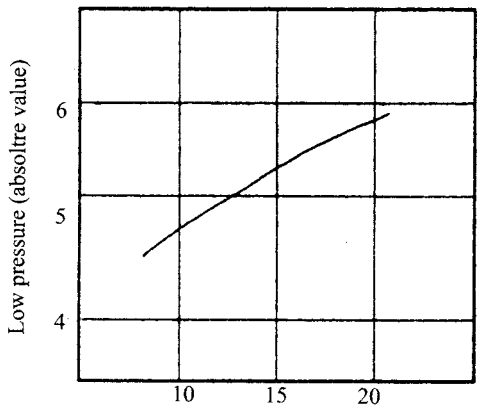

Outdoor dry bulb temp.

(c)

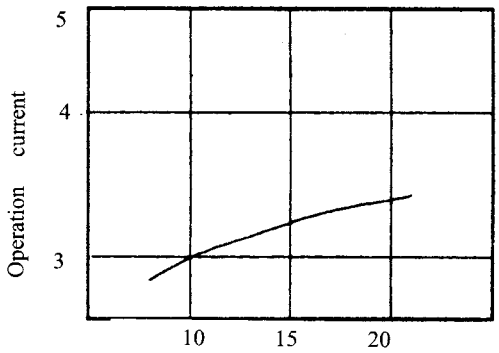

Outdoor dry bulb temp.

(d)

figure 5-2

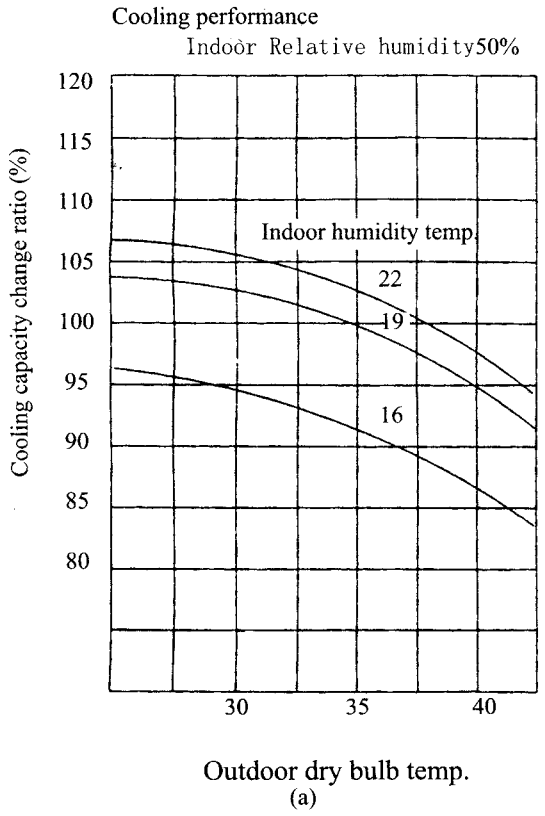
Cooling performance
Indoor Relative humidity50%
Cooling capacity change ratio (%)
120
115
110
105
100
95
90
85
80
Indoor humidity temp.
22
19
16
30
35
40
Outdoor dry bulb temp.
(a)

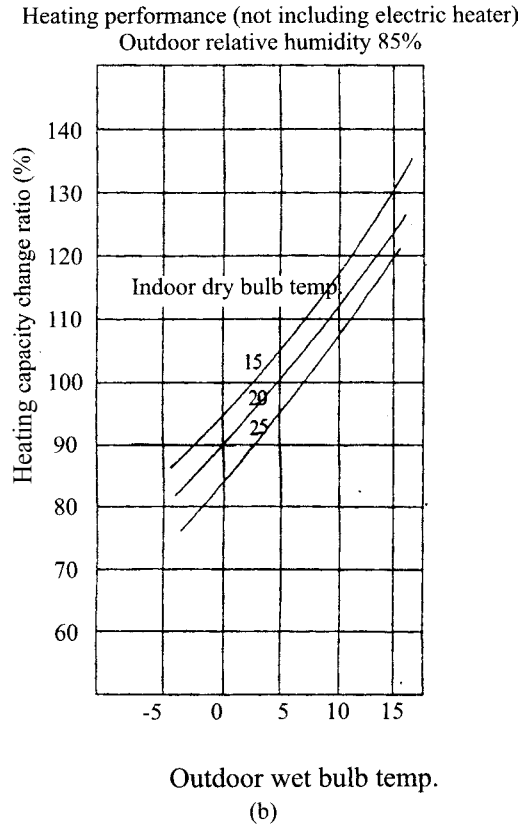
Heating performance (not including electric heater)
Outdoor relative humidity 85%
Heating capacity change ratio (%)
140
130
120
110
100
90
80
70
60
Indoor dry bulb temp.
15
20
25
-5
0
5
10
15
Outdoor wet bulb temp.
(b)

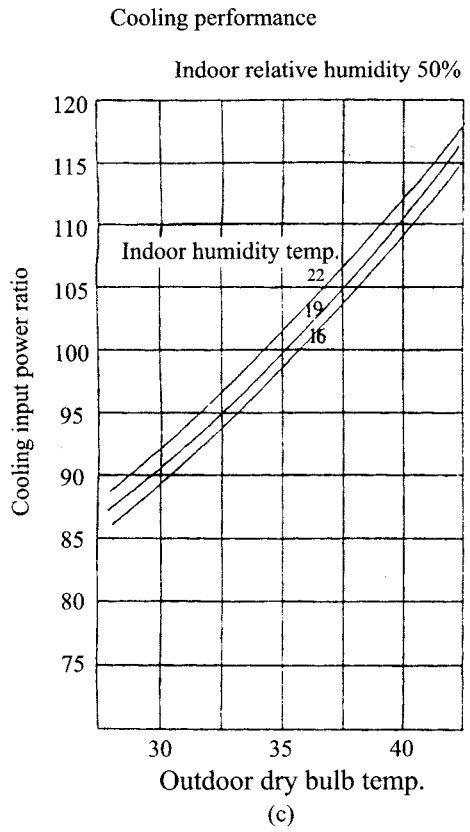
Cooling performance
Indoor relative humidity 50%
Cooling input power ratio
120
115
110
105
100
95
90
85
80
75
Indoor humidity temp.
22
19
16
30
35
40
Outdoor dry bulb temp.
(c)

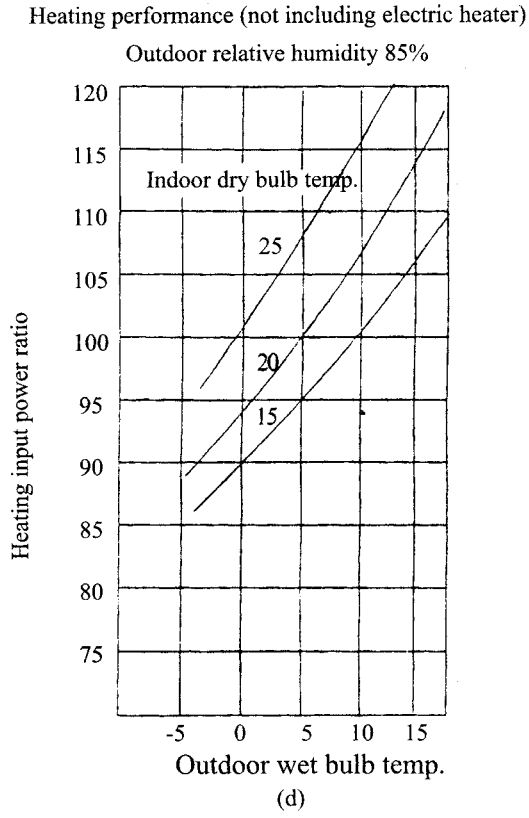
Heating performance (not including electric heater)
Outdoor relative humidity 85%
Heating input power ratio
120
115
110
105
100
95
90
85
80
75
Indoor dry bulb temp.
25
20
15
-5
0
5
10
15
Outdoor wet bulb temp.
(d)

figure 5-3

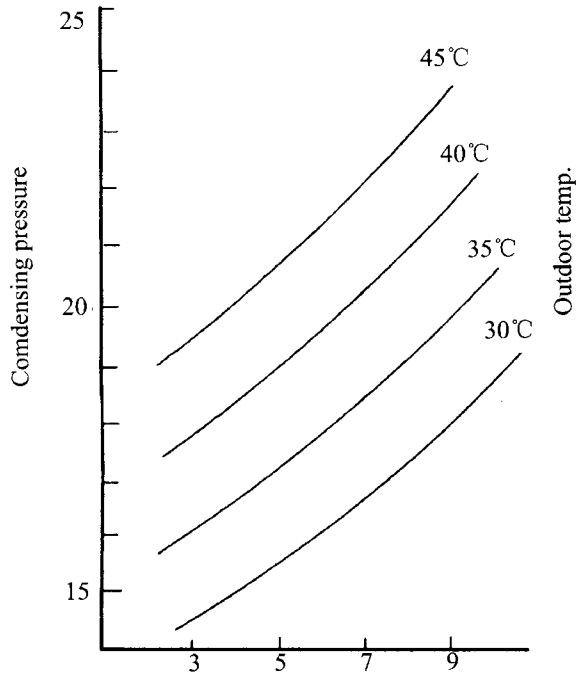

The affection to the charging quantity by pressure under cooling work condition.

(Indoor work condition:dry bulb 27℃,wet bulb 19.5℃)

(e)

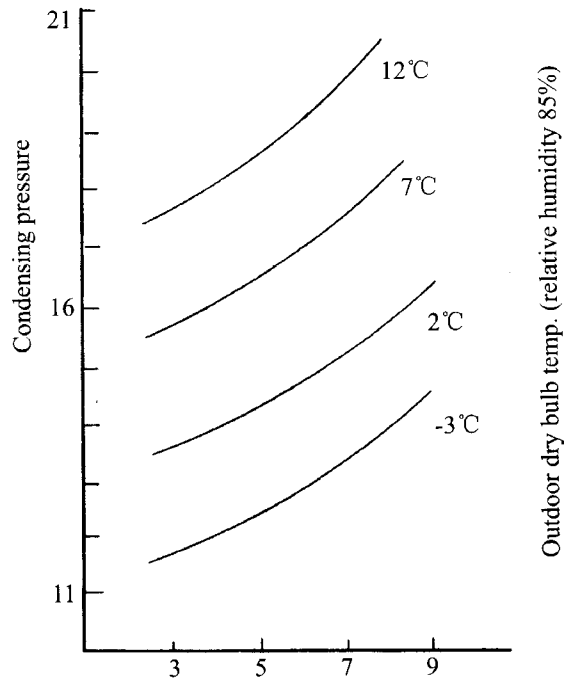

The affection to the charging quantity by pressure under cooling work condition.

(Indoor work condition:dry bulb 21℃)

(f)

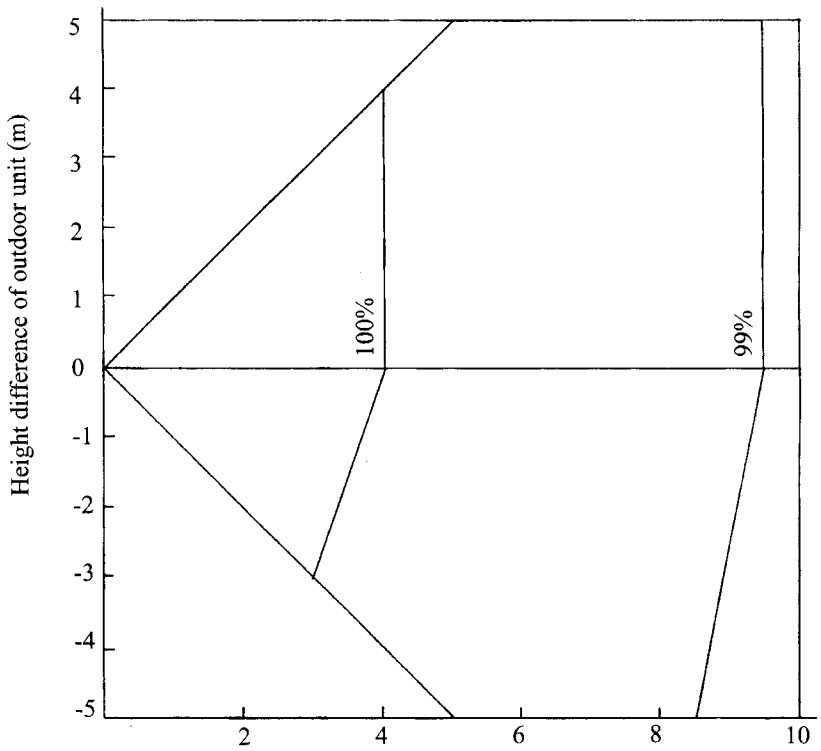

Cooling capacity vary with the length of connection pipe

figure 5-4

5.4 Outlines and dimensions of indoor unit

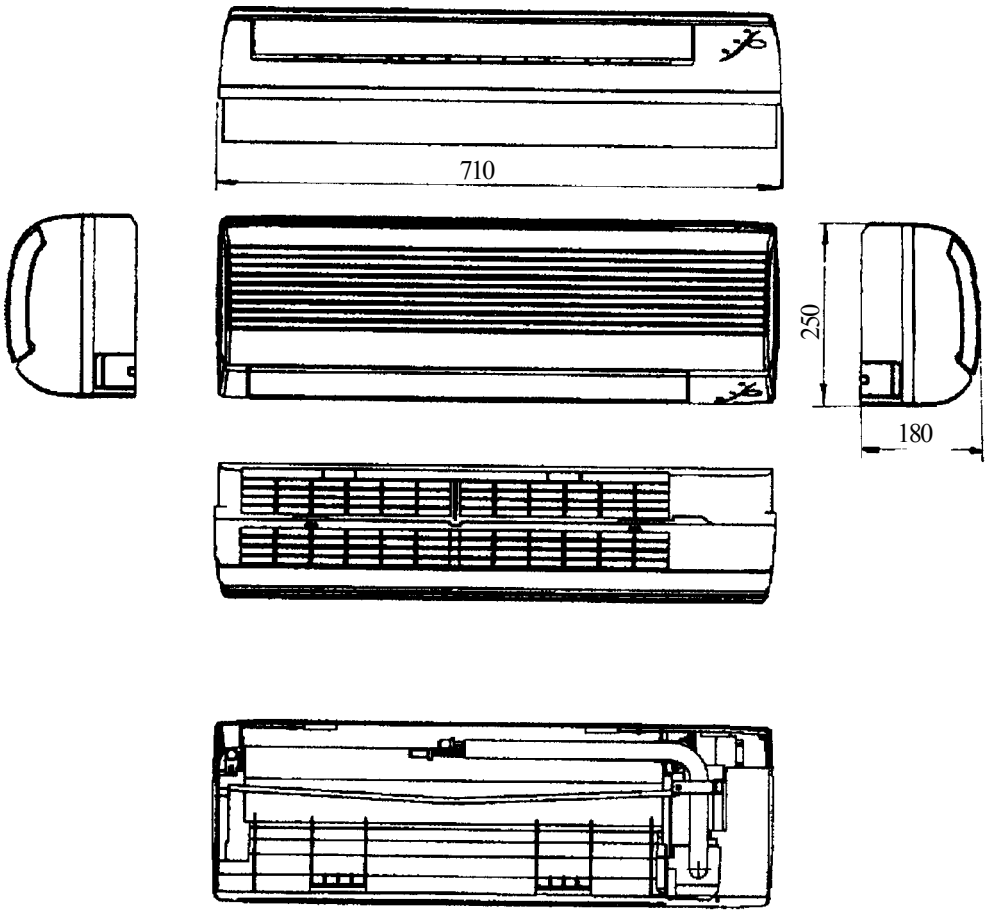

Unit:mm

Ceiling

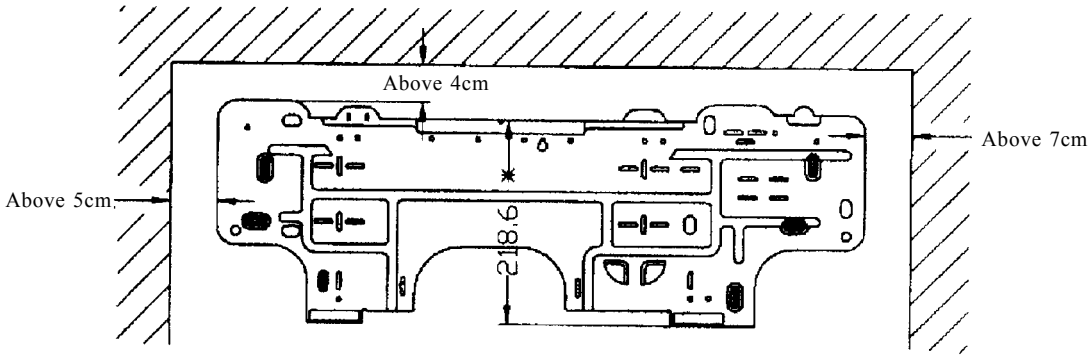

Wall-mounted fram

figure 5-5

5.5 Outlines and dimensions of outdoor unit

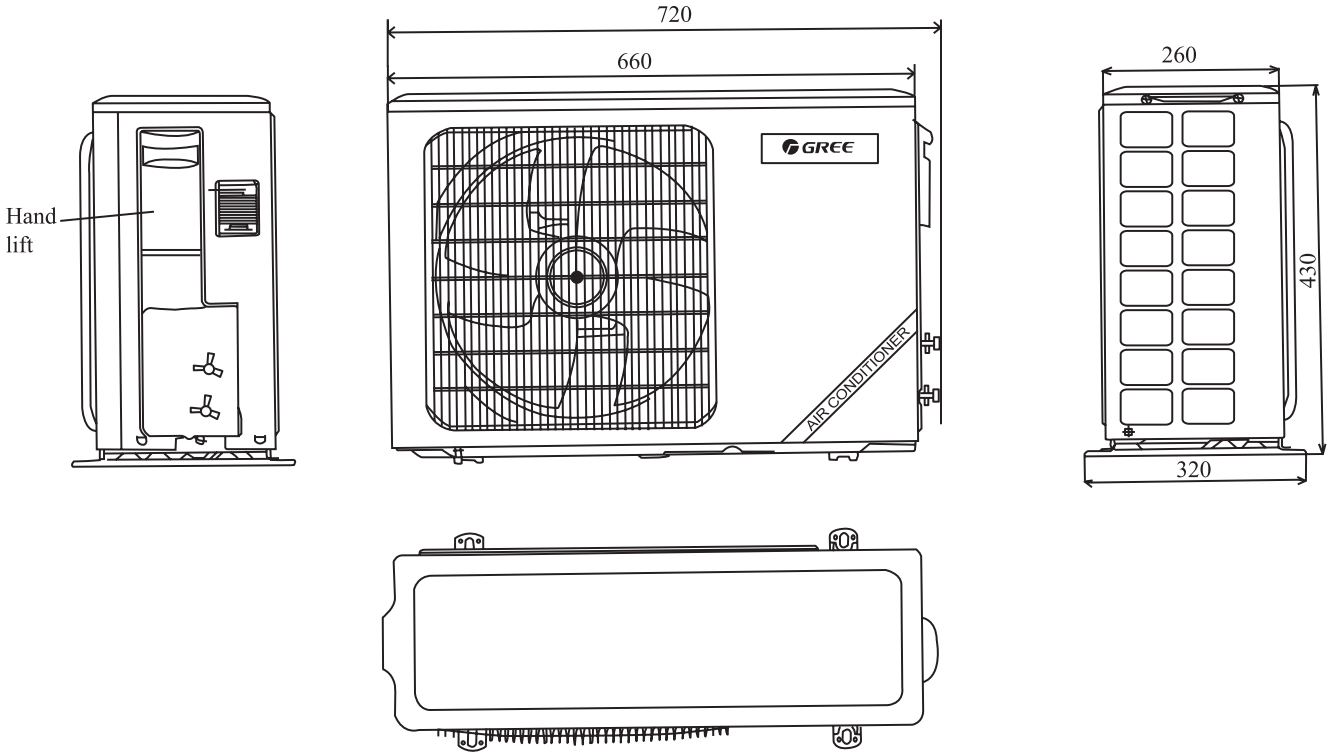

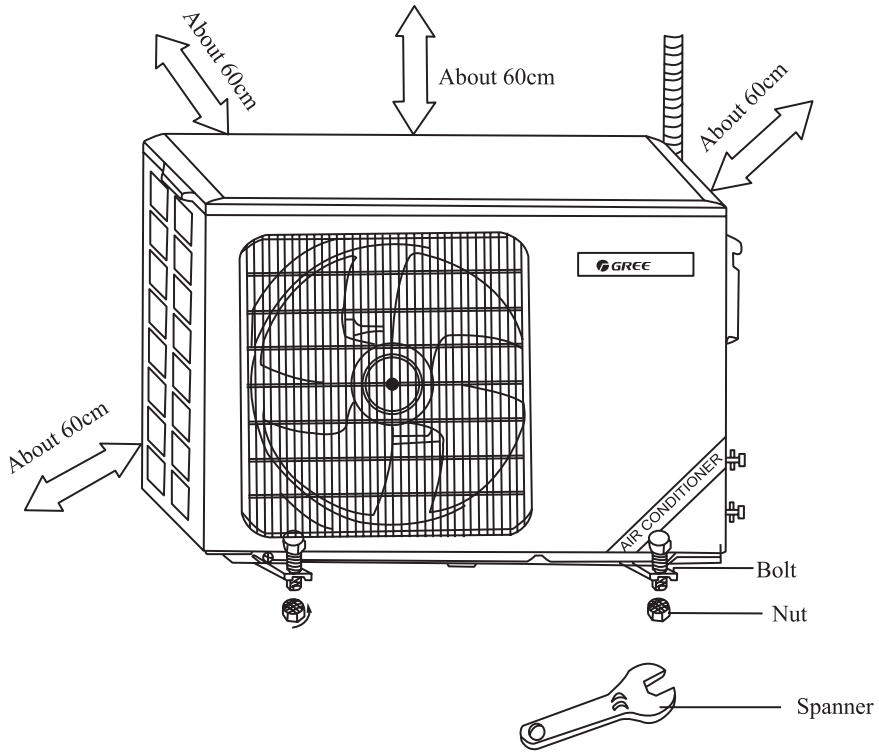

figure 5-6

5.6 Explosive view of indoor unit

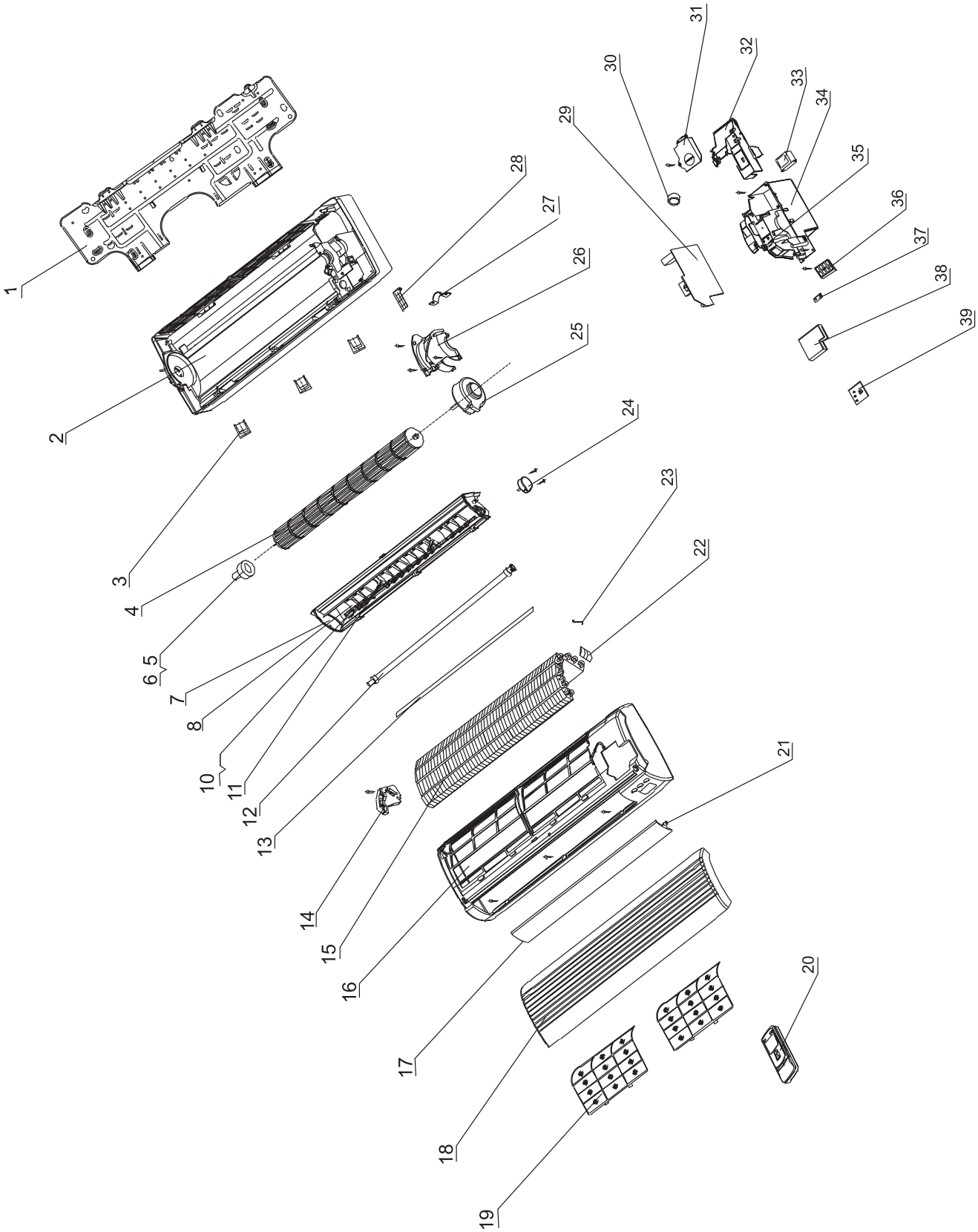

figure 5-7

5.7 Spare parts list of indoor unit

Table 5-3

No.	Description	名称及规格	Part No.				Qty
			KF-23G/A103	KFR-23G/A103	KF-26G/A103	KFR-26G/A103	
1	Wall-Mounting Frame	壁挂板	01252209	01252209	01252209	01252209	1
2	Rear Case	底壳	22202004	22202004	22202004	22202004	1
3	Screw Cover	螺钉盖	24252001	24252001	24252001	24252001	3
4	Cross Flow Fan	贯流风叶	10352398	10352398	10352398	10352398	1
5	Fan Bearing	贯流风叶轴承胶圈	76512203	76512203	76512203	76512203	1
6	Ring of Bearing	风扇轴承	76512210	76512210	76512210	76512210	1
7	Water Tray Assy	接水盘部件	20182015	20182015	20182015	20182015	1
8	Swing Louver	扫风叶片	10512002	10512002	10512002	10512002	10
9	Connecting Lever 1	扫风连杆 1	11582004	11582004	11582004	11582004	1
10	Connecting Lever 2	扫风连杆 2	11582005	11582005	11582005	11582005	1
11	Manual Lever	拔杆	10582001	10582001	10582001	10582001	2
12	Drainage Pipe	排水管	05232006	05232006	05232006	05232006	1
13	Evaporator Gate	蒸发器引水板	01072381	01072381	01072381	01072381	1
14	Evaporator Supporter	蒸发器角形架	24212001	24212001	24212001	24212001	1
15	Evaporator Assy	蒸发器部件	01002056	01002056	01002056	01002056	1
16	Front Case Assy	面板体部件	20002040	20002040	20002040	20002040	1
17	Guide Louver	导风板	26112004	26112004	26112004	26112004	1
18	Front Panel	面板	20002035	20002035	20002035	20002035	1
19	Filter	过滤网	11122006	11122006	11122006	11122006	2
20	Remote Controller	遥控器Y512E	30515002	30515002	30515002	30515002	1
21	Guide Louver Bearing	导风板轴套	10542011	10542011	10542011	10542011	3
22	Evaporator Pipe Cover	蒸发器接水槽	06122001	06122001	06122001	06122001	1
23	Sensor Insert	感温头插片B	42020063	42020063	42020063	42020063	1
24	Stepping Motor MP24GA	步进电机MP24GA	15212102	15212102	15212102	15212102	1
25	Motor FN13D	电机 FN13D(配左右胶圈)	15012045	15012045	15012045	15012045	1
26	motor clamp	电机压板	26112014	26112014	26112014	26112014	1
27	wire clamp	电线夹	71010103	71010103	71010103	71010103	1
28	Pipe Clamp	连接管压板	24242001	24242001	24242001	24242001	1
29	PCB 5K91D	控制器5K91D	30025353	\	30025353	\	1
29	PCB 5K92D	控制器5K92D	\	30025352	\	30025352	1
30	magnet ring	磁环I 28X16X13	49010104	49010104	49010104	49010104	1
31	Electric Box Cover 2	电器盒顶盖2	20102009	20102009	20102009	20102009	1
32	Electric Box Cover 1	电器盒顶盖1	20102008	20102008	20102008	20102008	1
33	Transformer	电源变压器SC28B1	43110170	43110170	43110170	43110170	1
34	Electric Box	电器盒	20102010	20102010	20102010	20102010	1
35	Cable Clamp	压线槽	70482001	70482001	70482001	70482001	1
36	Terminal Board T4A3A7377	接线板T4A3A7377	42010183	42010183	42010183	42010183	1
37	Wire Clip	压线片	70482401	70482401	70482401	70482401	1
38	LED Holder	灯板安装盒	20182005	20182005	20182005	20182005	1
39	LED Board	接收板JD	30046023	30046023	30046023	30046023	1
40	room sensor	室温感温包	39000164	39000164	39000164	39000164	1
41	tube sensor	管温感温包	39000160	39000162	39000160	39000162	1
42	Connecting Cable	电源连接线3G1.0	40020411	40020411	40020411	40020411	1
43	singnal cable	信号控制线	\	40032129	\	40032129	1
44	Power Cord	电源线3X1.0	40020267	40020267	40020267	40020267	1

The data are subject to change without notice.

5.8 Explosive view of outdoor unit

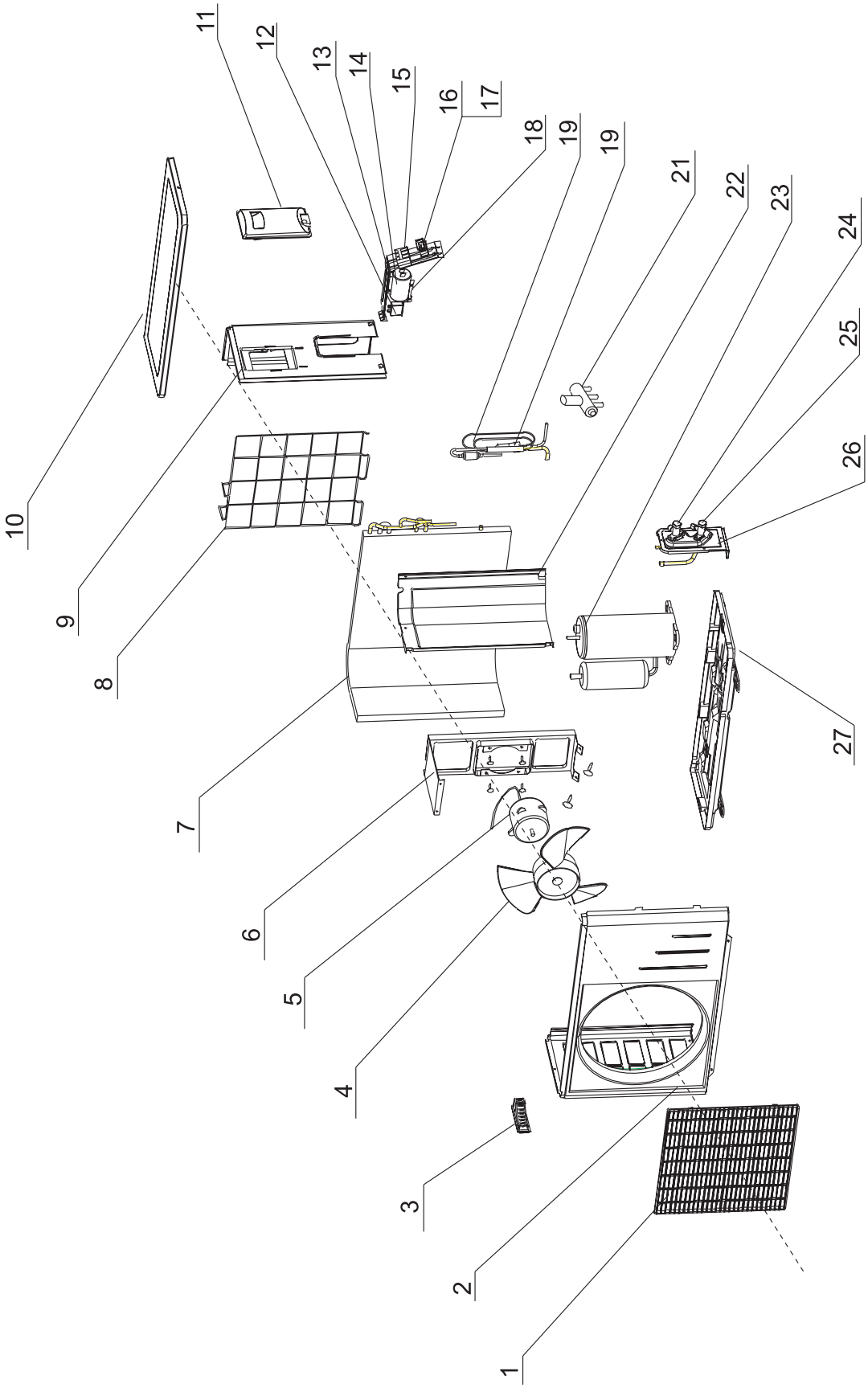

figure 5-9

5.9 Spare parts list of outdoor unit

Table 5-3

No.	Description	名称及规格	Part No						Qty
			KF-23W/A103	KF-23W/A103	KFR-23W/A103	KF-26W/A103	KF-26W/A103	KFR-26W/A103	
1	front grill	面罩	22263002	22263002	22263002	22263002	22263002	22263002	1
2	front plate	面板	20003100	20003100	20003100	20003100	20003100	20003100	1
3	little handle	小提手	26233100	26233100	26233100	26233100	26233100	26233100	1
4	axial flow fan	轴流风叶	10333002	10333002	10333002	10333002	10333002	10333002	1
5	motor FW20B	电机FW20B	15013045	15013045	15013045	15013045	15013045	15013045	1
6	motor support	电机支架组件	01703200	01703200	01703035	01703200	01703200	01703035	1
7	condenser assy	冷凝器组件	01103036	01103050	01103039	01103038	01103166	01103039	1
8	rear grill assy	后护网组件	11123300	11123300	11123300	11123300	11123300	11123300	1
9	right side plate assy	右侧板组件	01303150	01303150	01303150	01303150	01303150	01303150	1
10	top cover assy	顶盖组件	01253262	01253262	01253262	01253262	01253262	01253262	1
11	handle	大提手	26233101	26233101	26233101	26233101	26233101	26233101	1
12	fan motor capacitor (1.5uF/450VAC)	风机电容CBB61 (1.5uF/450VAC)	33010018	33010018	33010018	33010018	33010018	33010018	1
13	electric box assy	电器盒	01413034	01413034	01413034	01413034	01413034	01413034	1
14	compressor capacitor (25uF/450VAC)	压缩机电容CBB65 (25uF/450VAC)	33000017	\	33000017	33000017	\	33000017	1
14	compressor capacitor (20uF/450VAC)	压缩机电容CBB65 (20uF/450VAC)	\	33010044	\	\	\	\	1
14	compressor capacitor (30uF/450VAC)	压缩机电容CBB65 30uF/450V	\	\	\	\	33000018	\	1
15	terminal board	三位接线板T386A	42011241	42011241	42011241	42011241	42011241	42011241	1
16	wire clip	压线板	24253002	24253002	24253002	24253002	24253002	24253002	1
17	wire seat	压线座	24253001	24253001	24253001	24253001	24253001	24253001	1
18	capacitor localizer	电容限位块	02113002	02113002	02113002	02113002	02113002	02113002	1
19	capillary assy	毛细管组件	03003098	03003200	03003108	03003106	03003194	03003108	1
20	one way valve	单向阀A	\	\	07130102	\	\	07130102	1
21	reverse valve	四通阀STF-O1O1	\	\	43000312	\	\	43000312	1
22	clapboard assy	隔板组件	01233100	01233100	01233100	01233100	01233100	01233100	1
23	compressor	压缩机及其配件(过载内置)PH150X1C-8DZC2	00120109	\	00120109	\	\	\	1
23	compressor	压缩机及其配件KH 145VFRC(外置过载)	\	00100050	\	\	\	\	1
23	compressor	压缩机及其配件 PH165X1C-8DZC2	\	\	\	00100031	\	\	1
23	compressor	压缩机及其配件 2P17S225ANA(外置过载)	\	\	\	\	00120110	\	1
23	compressor	压缩机及其配件 RH174VHAC	\	\	\	\	\	00120078	1
24	valve 1/4"	阀门1/4"	07100125	07100125	07100125	07100125	07100125	07100125	1
25	valve 3/8"	阀门3/8"	07100143	07100143	07100143	07100143	07100143	07100143	1
26	valve support	阀门支架	01713036	01713036	01713036	01713036	01713036	01713036	1
27	metal base	底盘组件	01203062	01203087	01203062	01203062	01203070	01203056	1
28	drainage connecter	室外机排水接头	\	\	06123401	\	\	06123401	1

The data are subject to change without notice.

5.10 Circuit diagram

These circuit diagrams are subject to change Without notice.
Please refer to the ones stuck on the machines.

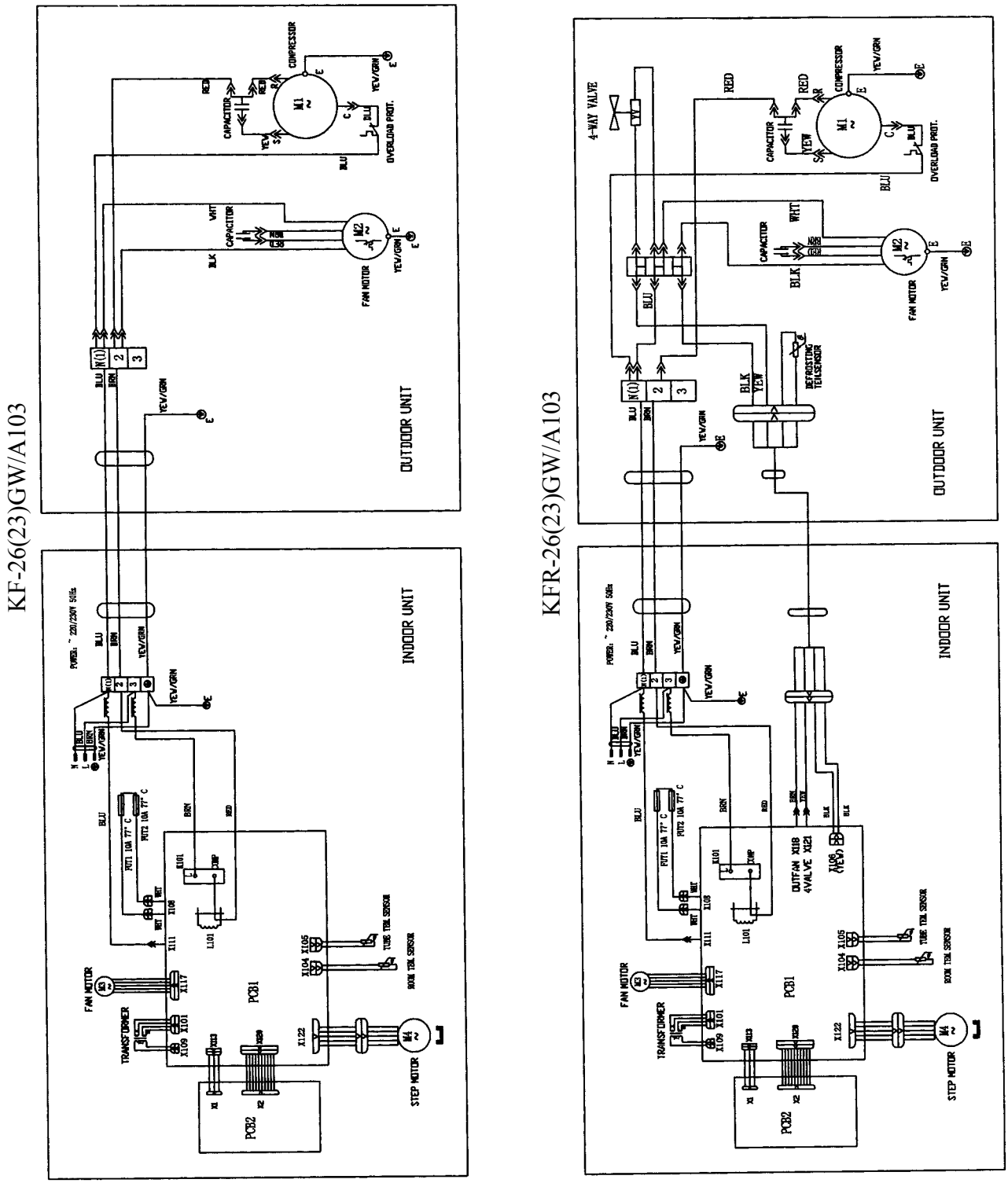

figure 5-10

5.11 PCB function manual

3 In 1 PCB function manual.

A. running mode

1. cooling 2.dehumidifying 3.heating 4. auto

B. input parameters

1. indoor ambient temp. T_{in}
2. evaporator tube temp. T_{eva}
3. setting temp. T_{set}
4. condenser tube temp. T_{con}

C. targets

1. indoor motor (motor)
2. swing motor
3. outdoor motor (single speed motor)
4. compressor
5. four-way reversing valve
6. cooling, dehumidifying indicator; running indicator(for birdline, butterfly series)
7. digital tube setting temp. indicator or timer indicator

D. fundamental functions

1. cooling mode

(1) the running conditions and control measures

a. if $T_{in} \geqslant T_{set} + 1$℃, the machine runs at the cooling mode. Compressor runs, outdoor motor runs at low speed , indoor fan runs at the set fan speed.

b. if $T_{in} \leqslant T_{set} - 1$℃, the machine stops. Compressor stops first , outdoor motor stops after 15 seconds , indoor motor runs at the set fan speed.

c. if $T_{set} - 1$℃ $< T_{in} < T_{set} + 1$℃,keep the previous state.

(2) in this mode, the reversing valve is inactive, the temp. setting range is from 16~30℃.

(3) Protect function

a. anti-freezing function.

if compressor have run 6 minutes , and detect $T_{eva} < 0$℃ for continuous 3 minutes, then the compressor , outdoor fan stopped , indoor fan run at the set fan speed. After 3 minutes later, it will run at the original state if $T_{eva} \geqslant 10$℃.

b. compressor protection

Compressor's starting interval should be more than 3 minutes no matter in whatever modes and conditions. If it's plugged in first time, the compressor does not have 3 minutes delay. When com-

pressor is started, it will not stop within 5 minutes unless it is plugged out.

c. overload protection

If it detect the system current surpass the designed 13 A for continuous 3 minutes, the machine go into fan mode, when 3 minutes passed and it detect the current no more than 13 A, it will back to original state. If it detects overloading states for 6 consecutive times, the machine stops, and must be restarted by remote controller.

2. dehumidifying mode

(1) the working conditions and control measures

a. if $T_{in} > T_{set}+2℃$, it is in cooling running, the indoor motor speed can be selected ,and outdoor motor run at low speed.

b. If $T_{set} -2℃ \leqslant T_{in} \leqslant T_{set}+2℃$,it goes into dehumidifying running ,the indoor motor run at the low speed, 6 minutes later the compressor stops, another 15 seconds later the outdoor fan stops and another 30 seconds later, the indoor motor stops, 3 and a half minutes later, compressor and outdoor fan run again ,indoor motor runs at the low speed, then the machine cycle the above procedures repeatedly. outdoor motor runs at the low speed.

c. If $T_{in} < T_{set} -2℃$, compressor ,outdoor motor and indoor motor stop.

(2) in this mode, the reversing valve is inactive , the temp. setting range is 16~30℃.

(3) Anti-freezing protection.

If $T_{indoor} > T_{set} + 2℃$, it goes into cooling running , anti-freezing function is same with cooling mode, but the compressor must stops for 4 minutes. when it goes into dehumidifying mode, compressor runs 6 minutes , if it detects $T_{eva} < 0℃$,compressor and outdoor motor stop, indoor motor runs at low speed ,after 3 minutes delay ,and $T_{eva} \geqslant 10℃$,it will be back to its original state.

3. heating mode

(1) the working conditions and control measures

a. If $T_{in} \leqslant T_{set}+2℃$, it goes into heating mode, reversing valve, compressor and outdoor motor all work in the same time, indoor fan will run at the same procedures with anti cool air function.

b. If $T_{in} \geqslant T_{set} + 4℃$, compressor stops first, 15 seconds late, outdoor motor stops ,but reversing valve keeps working, indoor motor run at the procedures of blowing surplus heat.

c.if $T_{set} + 2℃ < T_{indoor} < T_{set} +4℃$, keep the previous running state.

(2) in this mode, the temperature setting range is 16~30℃.

(3) The working conditions of auxiliary electric heater.

In heating mode, when compressor is working, indoor motor runs at high speed and middle speed . if it detect $T_{eva}<50℃$ for continuous 8 seconds and $T_{indoor} \leqslant 25℃$, electric heater will work ,if compressor stop or indoor motor runs at low speed or $T_{eva} \geqslant 54℃$ or $T_{indoor} \geqslant 28℃$ or 10 seconds before defrosting , the electric heater will stop.

(4) protections

a .anti cool air

when the machine starts heating and $T_{eva} \geqslant 22℃$, indoor motor runs at low speed, and swing

motor makes the louver at the horizontal position(in Bird line, it will swing to the maximum air volume position), if $T_{eva} \geqslant 40℃$ or compressor have run 2 minutes ,indoor motor and swing motor will run at the set speed .

b .anti high temp.

in heating mode, if it detect $T_{eva} \geqslant 56℃$(58℃ can be selected), outdoor motor will stop(in this period it will not detect the defrosting temp.). if $T_{eva} \leqslant 52℃$, outdoor motor will be back running (it will not detect defrosting temp. in the first 5 seconds).

c. blowing surplus heat

In heating mode, when set temp is reached ,comp. stops first,15 seconds later outdoor fan stops, Indoor motor blows 90 seconds (60 seconds can be selected) at low speed ,swing motor makes the louver at the horizontal position(in Bird line,it will swing to the maximum air volume postion).

d. Compressor's protection is same with the one in cooling mode.

e. Overload protection

If it detects that the system current surpassed the designed 13 A for continuous 3 seconds, compressor, electric heater and outdoor motor stop , indoor motor runs the same procedures as the blowing surplus heat condition. After 3 minutes and current no more than 13 A, the machine will be back to its original state, indoor motor runs as the anti cool air condition. If it detects overloading state for 3 consecutive times within 30 minutes, the machine stops, and it must be restarted by remote controller.

f. defrosting conditions and procedures

In heating mode, if compressor has run 44 minutes (in its first 6 minutes it will not detect defrosting temp.) , and it has detected $T_{con} \leqslant -4℃$ for continuous 1 minutes , it begins to defrost , electric heater will stop for 10 seconds (even if electric heater is not working) , then indoor motor stops , reversing valve becomes inactive in another 2 seconds, another 2 seconds later, outdoor motor stops, when $T_{con} \geqslant 10℃$or defrosting lasts for 10 minutes , outdoor motor and reversing valve becomes active , indoor motor will run as the anti cool air condition, then it cycles again, recalculates the compressor's running time again. (In this period , if any protection works ,and after the machine is back to work , it will re-start defrosting state. it will not detect outdoor tube temp when compressor's in its first 6 minutes running)

g. noise eliminated protection

When you use RUN/STOP button to switch off the machine, reversing valve will become inactive in 2 minutes.

4. AUTO mode

(1) in AUTO mode, standard cooling T_{set}=25℃, standard heating T_{set}=20℃

(2) working procedures

a. If $T_{indoor} \geqslant T_{set} + 1℃$, select cooling mode, from this time, the set temp. is 25℃. If Tindoor $\leqslant T_{set}$-1℃, compressor and outdoor motor stop, indoor motor runs at the set speed, if T_{set} -1℃< T_{indoor} < T_{set} +1℃, keep the original state.

b. If $T_{indoor} \leqslant T_{set}$+2℃, select heating mode, from this time, the set temp. is 20℃, if $T_{indoor} \geqslant T_{set}$ + 4

℃, compressor stops first, outdoor motor stops 15 seconds later , reversing valve is always active, indoor motor runs as the blowing surplus heat condition. If T_{set} +2℃< T_{indoor} < T_{set} +4℃, keeps the original state.

Cooling & heating AUTO mode: in AUTO mode, when the machine is switched from heating mode to the other modes, reversing valve becomes inactive in 90 seconds.

Cooling only AUTO mode: there is no heating function in this mode.

(3) protections

It is same as the one in cooling or heating mode.

E. other controls

1. SWING mode

a. When it is active, the louver returns to position O, close the air outlet.

b. When machine works, it turns to the max. Air output position D, then returns back to position L to stand by (position L is the horizontal place mentioned before).

c. In swing state, the louver swings between position L and position D.

d. When the machine is switched off, it is back to position O.

e. When the machine is running and the swing is off, the louver stops at position E.

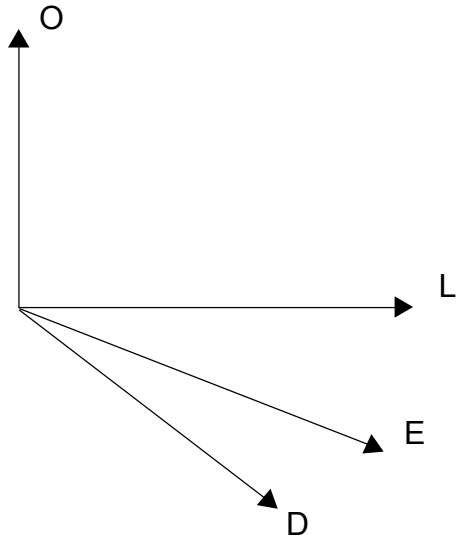

2. beeper

When PCB becomes active or receives the signal from the remote controller , the beeper will beep.

3. indication lamps

it flashes when defrosting begin.

4. press the AUTO button a time, the machine runs in AUTO mode, indoor motor runs in low speed, fresh air function is not active, press again the machine stops.

5. digital tube display(bee, butterfly)

(1) the digital tube displays the setting temperature(the range is16~30℃) when the machine is running

(2) The digital tube displays the setting time(the range is 1~24 hours) for 5 seconds when remote controller sets timer of on/off. Then come back to display the setting time; timer displays "—", it means that timer setting is canceled.

(3) Light button: when remote controller(Y512) sends light signal, the digital tube is lighted for 2~4 seconds then turns off.

6. Fresh air function.

there are two fresh air modes .

a.fresh air 2

fresh air motor will work 1 hour, then rest 1 hour, then cycle again.

b.fresh air 1

press the button AIR on the remote controller to select fresh air 1 function, the swing motor keeps running till you give a signal to change it.

7. Automatic fan speed .

a. in cooling mode, if Tindoor > T_{set} + 5℃	high speed
T_{indoor} ⩾T_{set} +3℃	middle speed
T_{indoor} ⩾ T_{set} + 1℃	low speed
b. in heating mode, if Tin_{door} ⩽Tset - 5℃	high speed
T_{indoor} ⩽Tset -3℃	middle speed
T_{indoor} ⩽Tset -1℃	low speed
c. c. in dehumidify mode, if T_{indoor} ⩾ T_{set} + 5℃	high speed
T_{indoor} ⩾ T_{set} + 2℃	low speed

8. SLEEP mode.

a. in cooling or dehumidifying mode, 1 hour after you set the sleep timer ,T_{set} will add 1℃automatically, another 1 hour, another 1℃ will be added.

b. In heating mode, 1 hour after you pset the sleep timer, T_{set} will lower 1℃automatically, another 1 hour, another 1℃will be lowered .

6.Inverter series

6.1 Summary.

figure 6-1

MODEL	NOTE
KFR-25GW/HF(2545) KFR-32GW/HF(3245)	1Ph 220-230V~50Hz R22 WITH AIR FRESH
KFR-25GW/JF(2545a) KFR-32GW/JF(3245a)	1Ph 220-230V~50Hz R22 WITHOUT AIR FRESH

6.2 Technical specifications.

Table 6-1

Model				KFR-25GW/JF(2545a)F KFR-25GW/HF(2545)F	
Function				Cooling	Heating
Power supply				1Ph-230V-50Hz	
Capacity			W	2500(900~2900)	3000(900~3400)
Rated input			W	990	1050
Rated current			A	5.2	5.2
Air flow			M^3/h	450	
Dehumidifying volume			L/h	1.3	
C.O.P(W/W)				2.52	2.86
Indoor unit	Model			KFR-25G/JF(2545a)	
	Motor fan speed(r/min)			1000/900/800	
	Output power(W)			8	
	Fan type/piece			Cross flow fan-1	
	Diameter-length(mm)			ϕ 91 × 616	
	Evaporator			Aluminum fin-copper tube	
	Row-fin distance(mm)			3-1.5	
	Working area(m^2)			0.18	
	Swing motor			MP24GA	
	Input power(W)			2	
	Fuse(A)			Controllor 3.15A Transformer 0.2A	
	Working capacitor(μF)			1	
	Noise(dB(A))			⩽ 38	
	Dimension(width-height-depth)mm			830 × 285 × 189	
	Net weight(kg)			11	
Outdoor unit	Model			KFR-25W/JF & KFR-25W/HF	
	Input power		W	960	
	Current		A	5.05	
	L.R.A.		A	22	
	Throttling method			Capillary	
	Compressor			C-1RV58HOU	
	Power		W	580	
	Protector			External overload protection	
	Starting method			Power supply module	
	Working temp.			Exhaust temperature ⩽ 115℃	
	Condenser			Aluminum-copper	
	Pipe-diameter			ϕ 9.52	
	Working area(m^2)			0.4	
	Fan motor speed(rpm)			730	
	Type-piece			Axial fan-1	
	Diameter(mm)			ϕ 400	
	Defrosting method			Auto defrost	
	Noise dB(A)			52	
	Dimension(mm)(width-height-depth)			848 × 540 × 320	
	Net weight(kg)			40	
	Refrigerant charge (kg)			R22 0.85	
Connecting pipe	Length		(m)	4	
	Outer diameter	Liquid pipe	mm	ϕ 6(1/4”)	
		Gas pipe	mm	ϕ 9.52(3/8”)	
	Max distance	Height	m	5	
		Length	m	10	

The technical date are subject to change without notice .Please refer to the nameplate of the unit.

Table 6-2

Model				KFR-32GW/JF(3245a)F KFR-32GW/HF(3245)F	
Function				Cooling	Heating
Power supply				1Ph-230V-50Hz	
Capacity			W	3200(900~3700)	4000(900~4300)
Rated input			W	1220	1220
Rated current			A	6.35	6.55
Air flow			M^3/h	510	
Dehumidifying volume			L/h	1.8	
C.O.P(W/W)				2.62	2.86
Indoor unit	Model			KFR-32G/JF	
	Motor fan speed(r/min)			1100/900/800	
	Output power(W)			8	
	Fan type/piece			Cross flow fan-1	
	Diameter-length(mm)			ϕ 91 × 616	
	Evaporator			Aluminum fin-copper tube	
	Row-fin distance(mm)			3-1.5	
	Working area(m^2)			0.18	
	Swing motor			MP24GA	
	Input power(W)			2	
	Fuse(A)			Controllor 3.15A Transformer 0.2A	
	Working capacitor(μF)			1	
	Noise(dB(A))			⩽ 39	
	Dimension(width-height-depth)mm			830 × 285 × 189	
	Net weight(kg)			11	
Outdoor unit	Model			KFR-32W/JF & KFR-32W/HF	
	Input power		W	1187	
	Current		A	6.21	
	L.R.A.		A	29	
	Throttling method			Capillary	
	Compressor			C-6RV73HOW	
	Power		W	700	
	Protector			External overload protection	
	Starting method			Power supply module	
	Working temp.			Exhaust temperature ⩽ 115℃	
	Condenser			Aluminum-copper	
	Pipe-diameter			ϕ 9.52	
	Working area(m^2)			0.4	
	Fan motor speed(rpm)			730	
	Type-piece			Axial fan-1	
	Diameter(mm)			ϕ 400	
	Defrosting method			Auto defrost	
	Noise dB(A)			52	
	Dimension(mm)(width-height-depth)			848 × 540 × 320	
	Net weight(kg)			41	
	Refrigerant charge (kg)			R22 1.25	
Connecting pipe	Length		(m)	4	
	Outer diameter	Liquid pipe	mm	ϕ 6(1/4")	
		Gas pipe	mm	ϕ 12(1/2")	
	Max distance	Height	m	5	
		Length	m	10	

The technical date are subject to change without notice .Please refer to the nameplate of the unit.

6.3 Performance curve

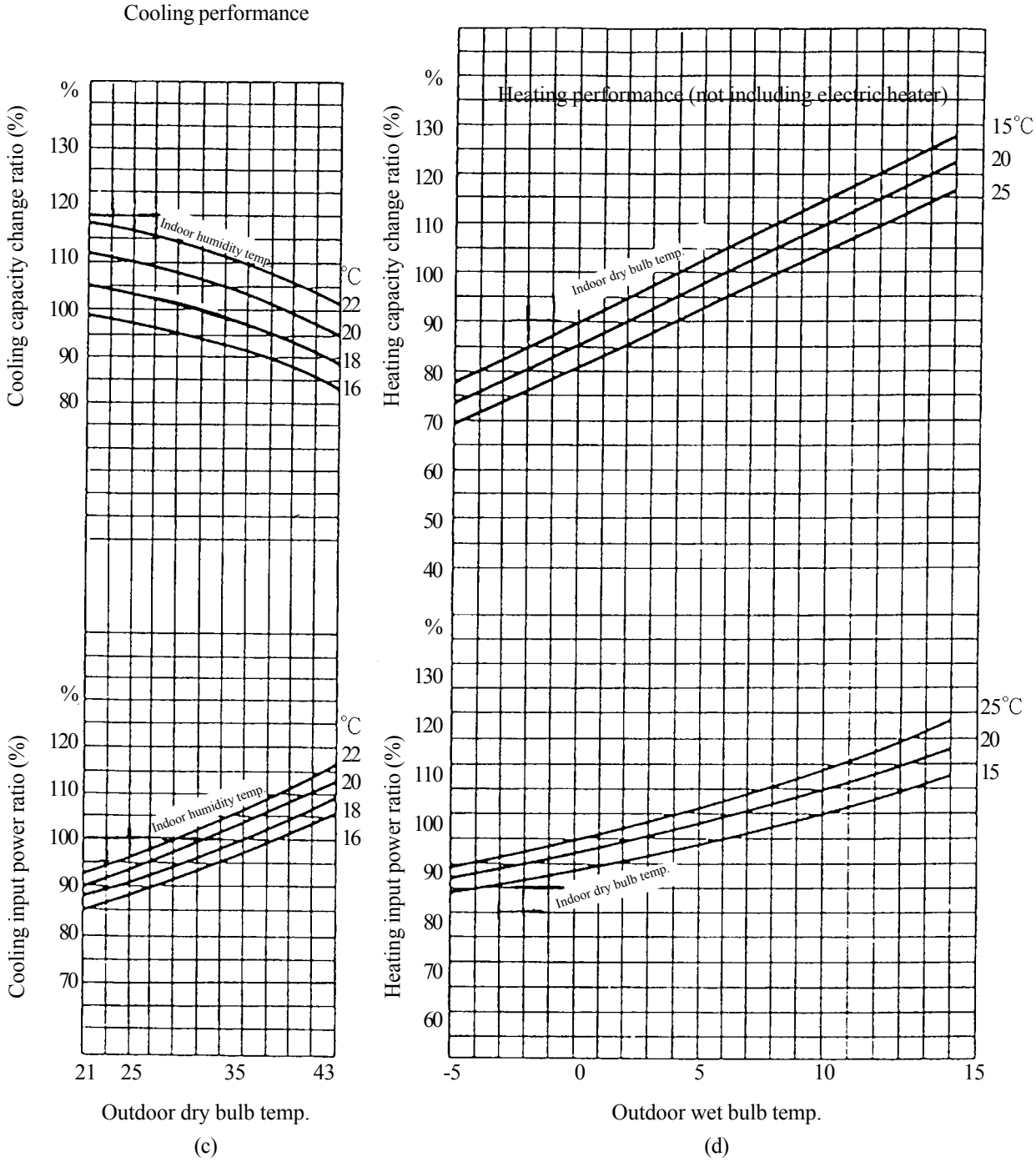

figure 6-2

For KFR-25GW/HF(2545)
KFR-25GW/JF(2545a)

Cooling performance

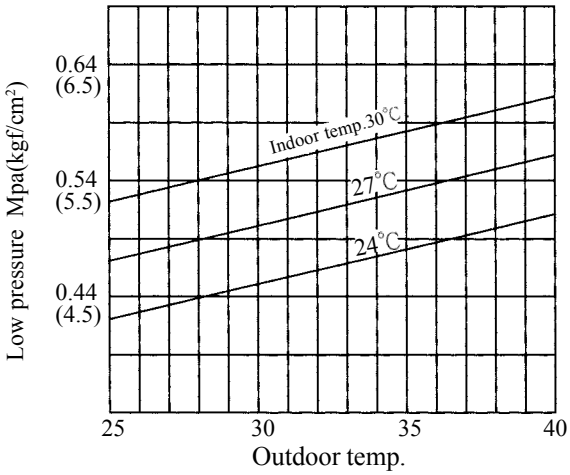

(a)

Heating performance (not including electric heater)

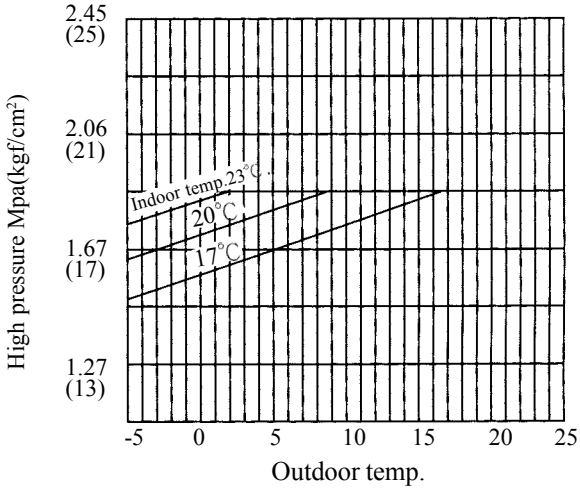

(c)

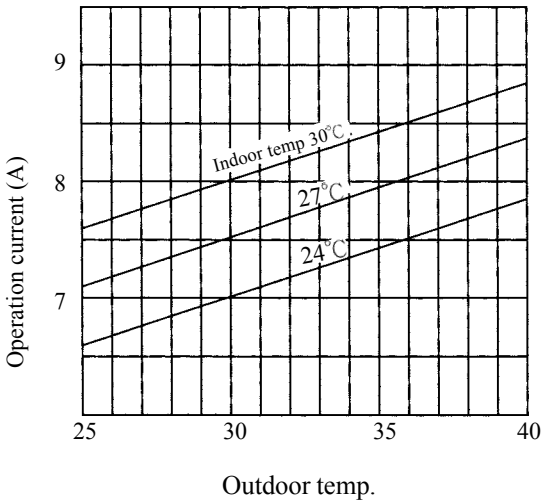

(b)

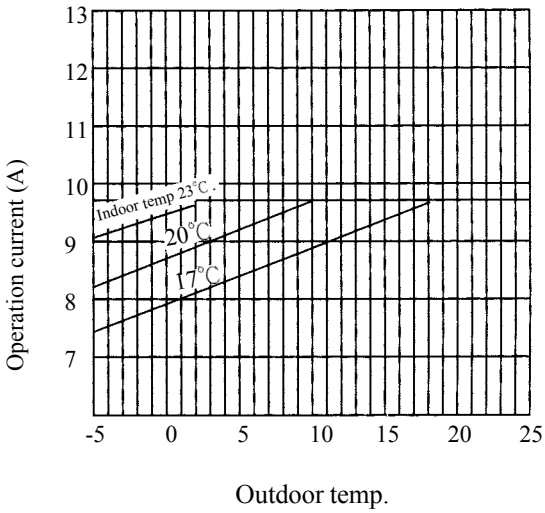

(d)

figure 6-3

For KFR-32GW/HF(3245) KFR-32GW/JF(3245a).

Cooling performance

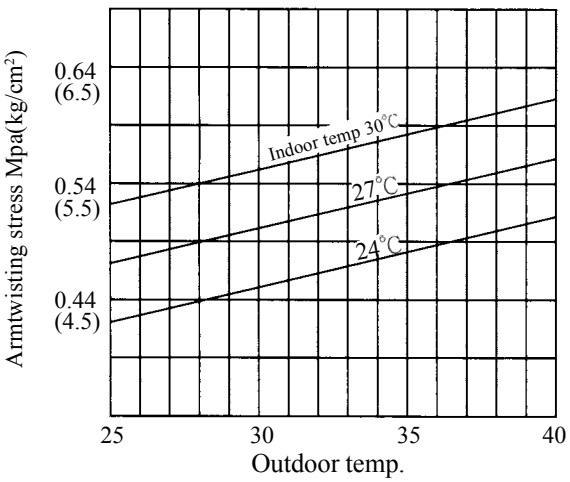

(1Mpa(G)=10.2kg/cm²(G))

(a)

Heating performance (not including electric heater)

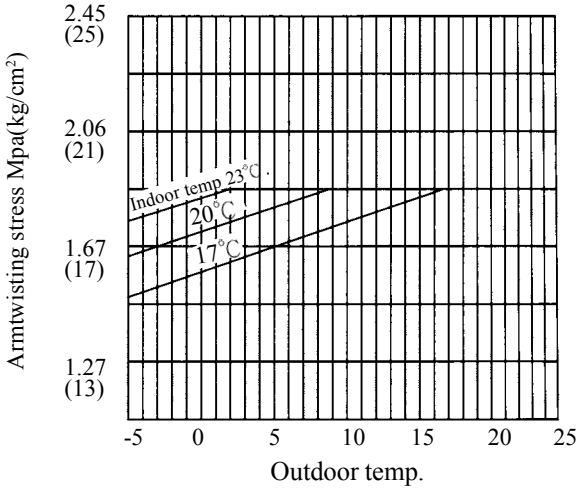

(1Mpa(G)=10.2kg/cm²(G))

(c)

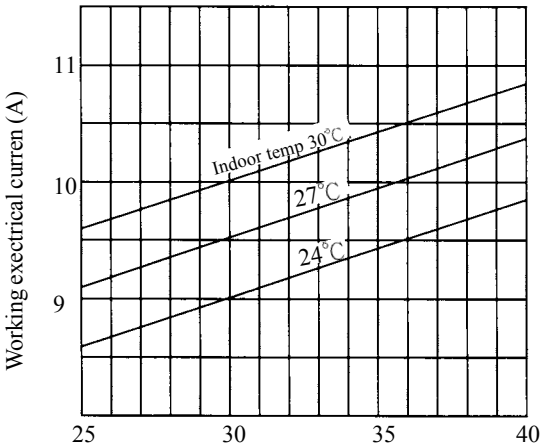

(b)

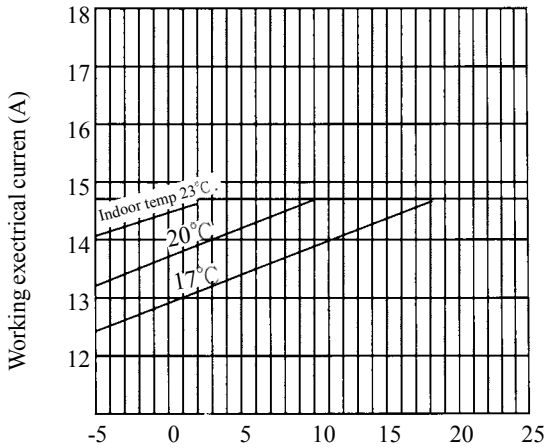

(d)

figure 6-4

6.4 Outlines and dimensions of indoor unit

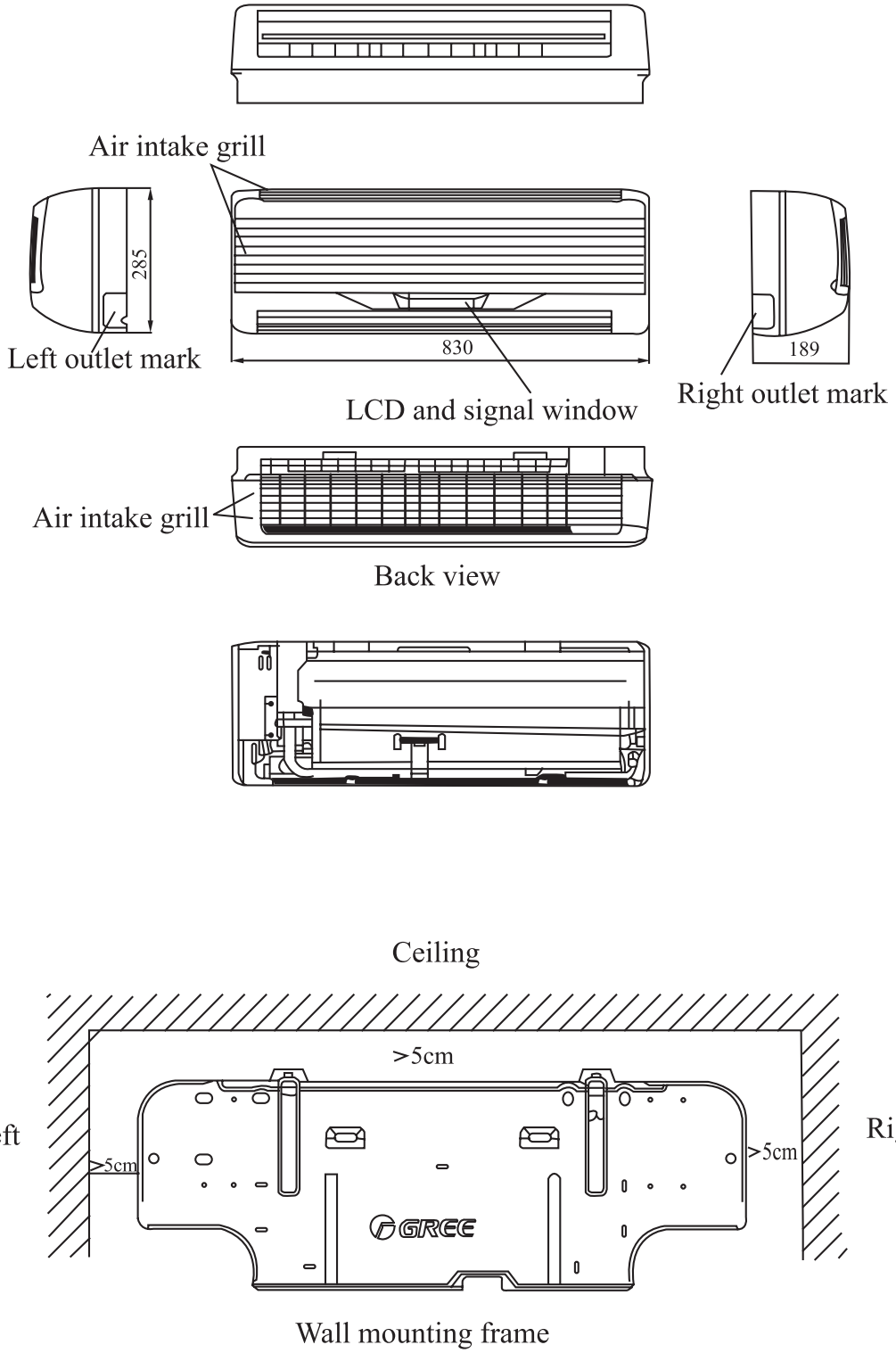

figure 6-5

6.5 Outlines and dimensions of outdoor unit

For KFR-25GW/JF(2545a) KFR-32GW/JF(3245a).

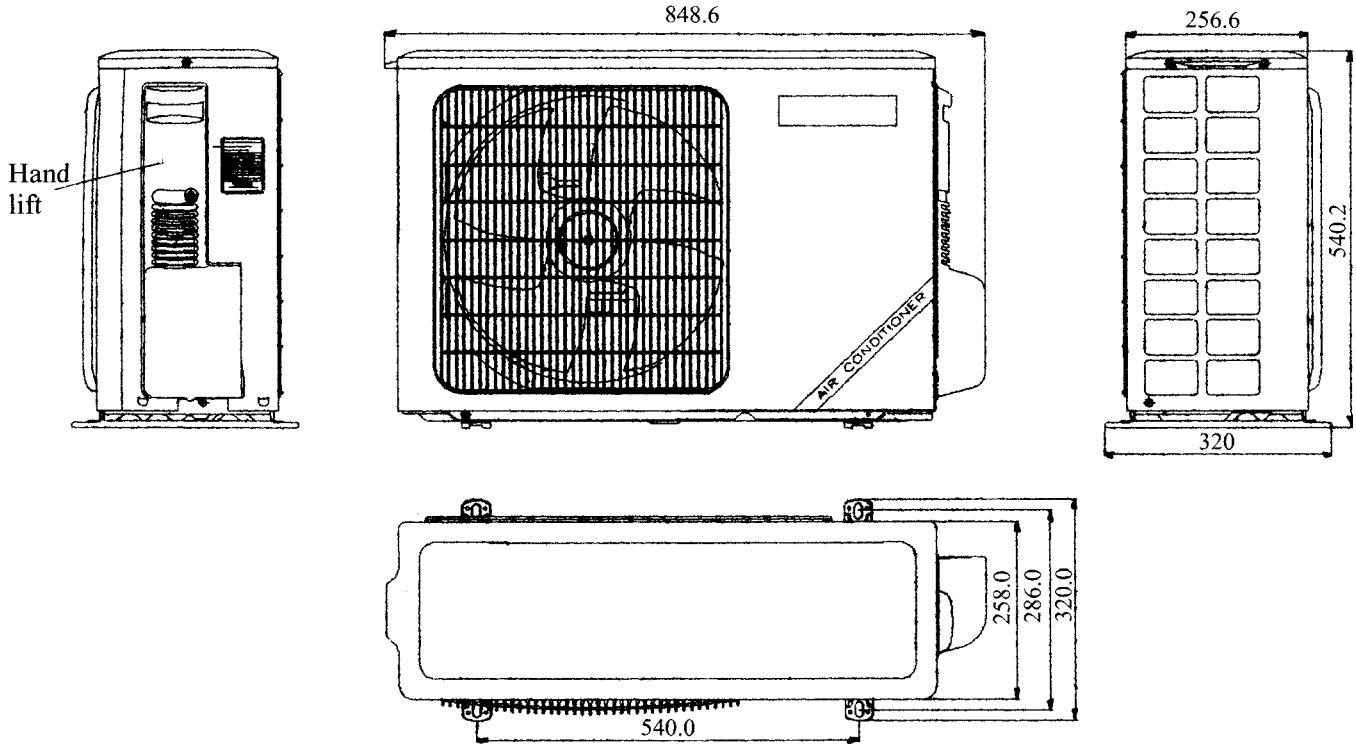

Fig. 9

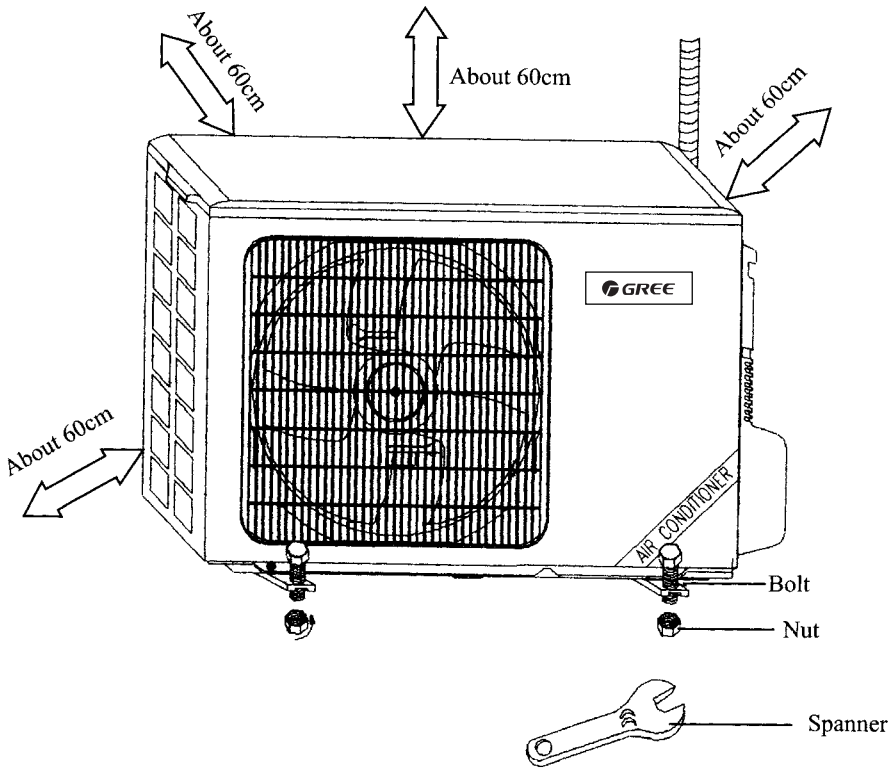

figure 6-6

6.6 Explosive view for indoor unit

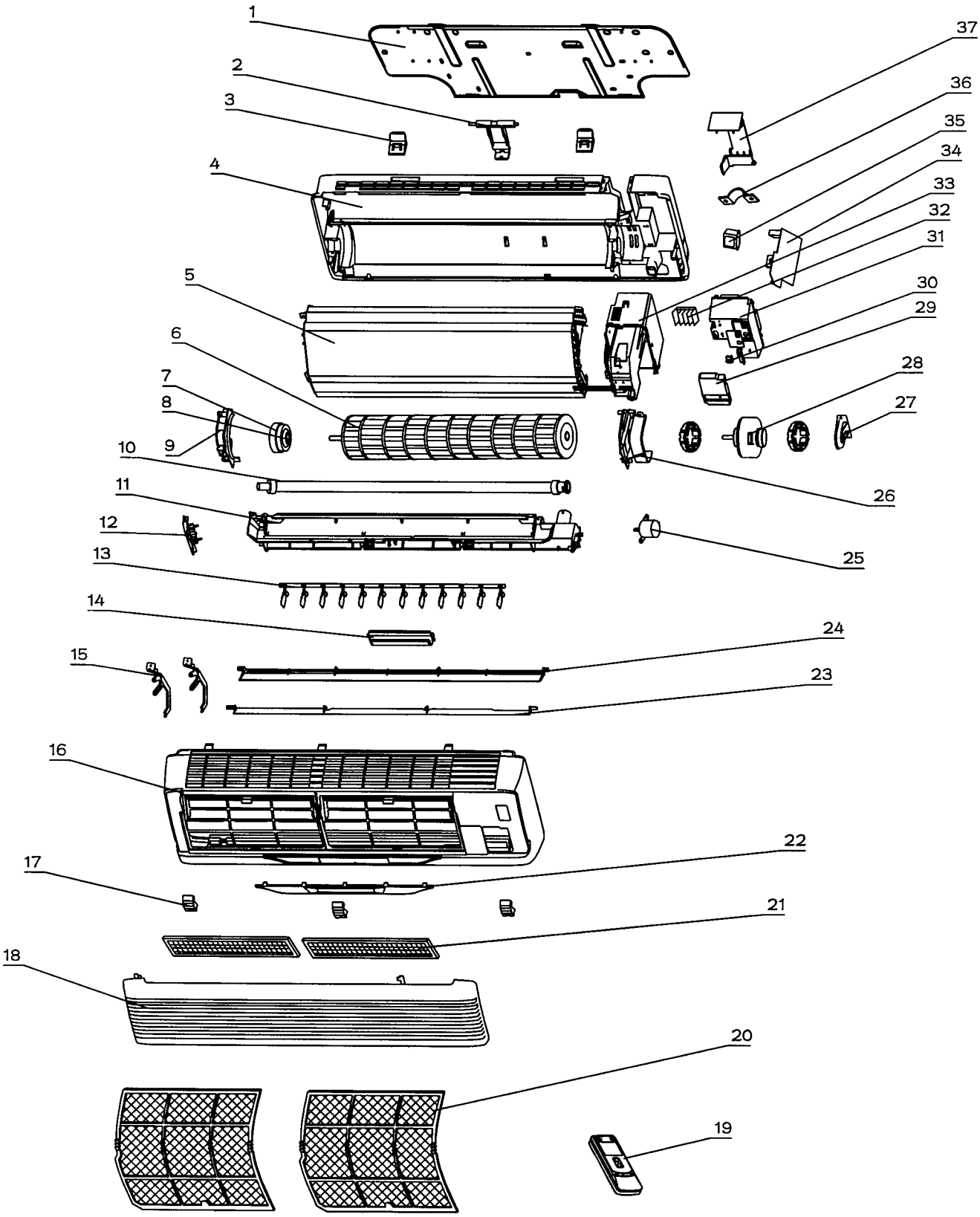

figure 6-7

6.7 Spare parts list of indoor unit

Table 6-3

No.	Description		Part No.				Qty
			KFR-25G/HF (2545)	KFR-32G/HF (3245)	KFR-25W/JF (2545a)	KFR-32W/JF (3245a)	
1	Wall-Mounting Frame	壁挂板	01252381	01252381	01252381	01252381	1
2	Pipe Clamp	卡管板	26112425	26112425	26112425	26112425	1
3	Hook	挂板钩	26272421	26272421	26272421	26272421	2
4	Rear Case	底壳	22202013	22202013	22202013	22202013	1
5	Evaporator Assy	蒸发器部件	01002017	01002017	01002017	01002017	1
6	Cross Flow Fan	贯流风叶部件	10352405	10352405	10352405	10352405	1
7	Ring of Bearing	轴承胶座	26712015	26712015	26712015	26712015	1
8	Fan Bearing	风扇轴承	76512210	76512210	76512210	76512210	1
9	Motor Left Clamp	电机左卡板	26112428	26112428	26112428	26112428	1
10	Drainage Pipe	排水管	05232411	05232411	05232411	05232411	1
11	Water Tray Assy	接水盘导风系统	12122060	12122060	12122060	12122060	1
12	Stepping Motor Gear	导风电机齿轮组	10592001	10592001	10592001	10592001	1
13	Swing Assy	扫风部件	10102001	10102001	10102001	10102001	1
14	LCD Display Assy	液晶显示屏组件	22242007	22242007	22242007	22242007	1
15	Guide Louver Holder	导风板支撑架	24212429	24212429	24212429	24212429	2
16	Front Case Assy	面板体	20002407	20002407	20002407	20002407	1
17	Screw Cover	螺钉盖	24252440	24252440	24252440	24252440	3
18	Front Panel	面板	20002418	20002418	20002418	20002418	1
19	Remote Controller	遥控器	30512505	30512505	30512505	30512505	1
20	Filter	过滤网	11122443	11122443	11122443	11122443	2
21	Air Cleaner	净化器滤网	11012422	11012422	11012422	11012422	2
22	LCD Paneling	液晶镶板	22432439	22432439	22432439	22432439	1
23	Guide Louver	小导风板	10512428	10512428	10512428	10512428	1
24	Guide Louver	大导风板	10512427	10512427	10512427	10512427	1
25	Stepping Motor MP24GA	步进电机	15212102	15212102	15212102	15212102	1
26	Right Motor Clamp	电机右卡板	26112429	26112429	26112429	26112429	1
27	Bearing holder	轴承座	26152423	26152423	26152423	26152423	1
28	Motor FN8D-PG	电机 FN8D-PG	15012014	15012014	15012014	15012014	1
29	Covering Plate	接线盖板	22242411	22242411	22242411	22242411	1
30	Switching Plate	开关拨动片	26272422	26272422	26272422	26272422	1
31	Electric Box Cover	电器盒顶盖	20102430	20102430	20102430	20102430	1
32	Terminal Board	接线排 GT4B4A1	42010152	42010152	42010152	42010152	1
33	Electric box	电器盒	0102429	20102429	20102429	20102429	1
34	PCB 9252A1	控制器 9252A1	30029203	\	\	\	1
34	PCB 9252B1	控制器 9252B1	\	30029209	\	\	1
34	PCB 9252A10A	控制器 9252A10A	\	\	30029206	\	1
34	PCB 9252B10A	控制器 9252B10A	\	\	\	30029210	1
35	Transformer SC28C1A	电源变压器SC28C1A	43110173	43110173	43110173	43110173	1
36	Wire Clamp	电线夹(中)	71010103	71010103	71010103	71010103	1
37	Rear Clamp	后板卡板	26112430	26112430	26112430	26112430	1
38	Power cable	电源线	40020202	40020203	40020202	40020203	1
39	Connecting Cable	电源连接线	40020441	40020440	40020441	40020440	1
40	Air exchange cable	换气连接线	40012103	40012103	\	\	1
41	room sensor	室温感温包	39000155	39000155	39000155	39000155	1
42	tube sensor	管温感温包	39000159	39000159	39000159	39000159	1

The data are subject to change without notice.

6.8 Explosive view of outdoor unit

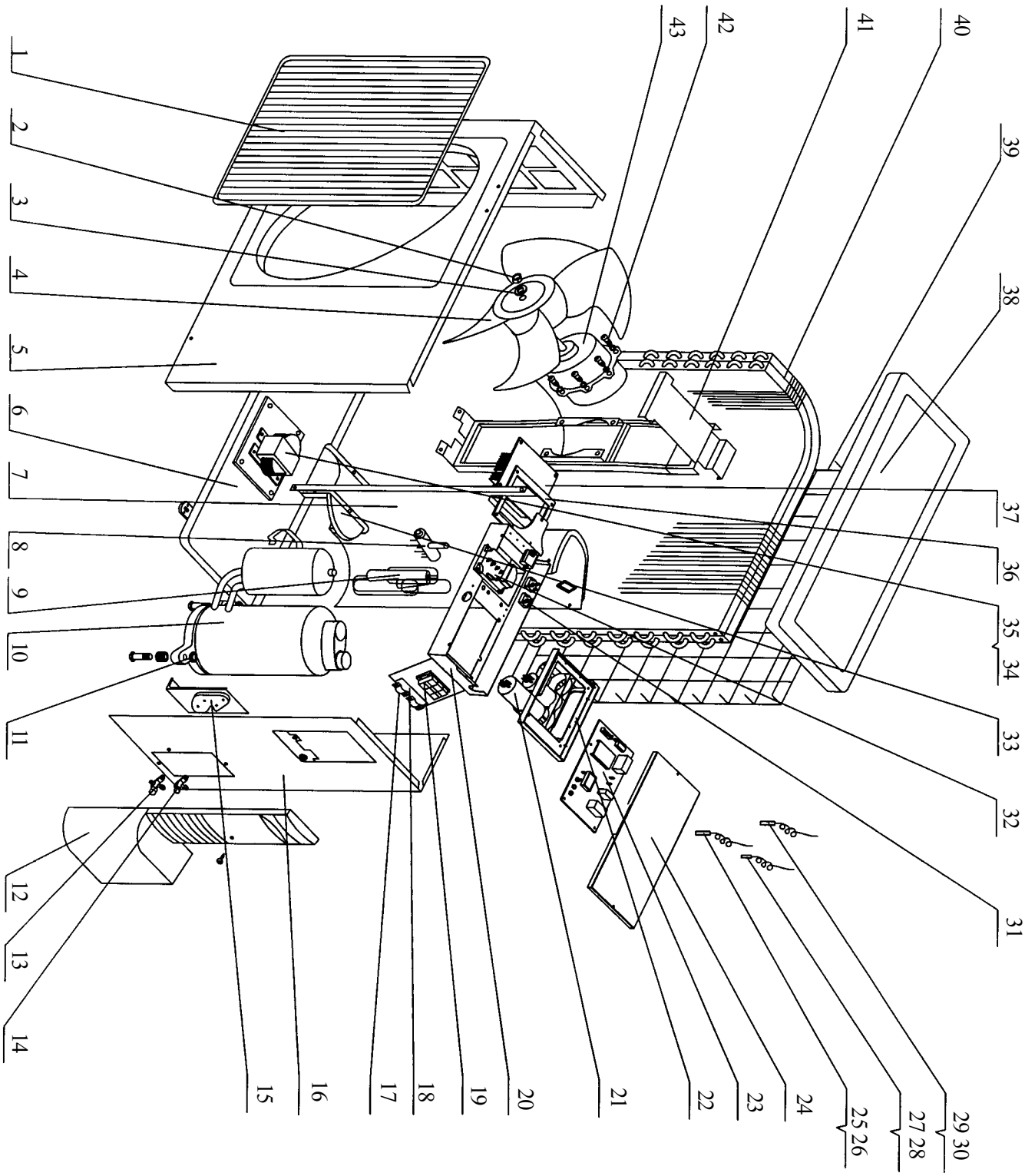

figure 6-8

6.9 Spare parts list of outdoor unit

Table 6-4

No.	Description		Part No.				Qty
			KFR-25W/HF	KFR-25W/JF	KFR-32W/HF	KFR-32W/JF	
1	Front Grill	面板格栅	22413008	22413008	22413008	22413008	1
2	Nut M6	螺母 M6	70310131	70310131	70310131	70310131	1
3	Washer 6	垫片 6	70410252	70410252	70410252	70410252	1
4	Axial Flow Fan	轴流风叶	10333412	10333412	10333412	10333412	1
5	Front Panel	面板	1533423	1533428	01533423	1533428	1
6	Metal Base	底盘组件	01203331	01203331	01203102	01203102	1
7	Isolation Sheet Assy	隔板组件	1233501	1233501	01233501	01233501	1
8	4-way Valve	四通阀	43000312	43000312	43000314	43000314	1
9	Capillary Assy	毛细管组件	3003067	3003067	03003085	03003085	1
10	Compressor C-1RV58HOU	压缩机及其附件	00100301	00100301			1
10	Compressor C-6RV73HOW	压缩机及其附件			00100302	00100302	1
11	Nut with Washer M8	带垫螺母	70310014	70310014	70310014	70310014	3
12	Handle	大提手	26233422		26233422		1
12	Handle	大提手		26233431		26233431	1
13	Valve 1/2"	阀门1/2 "			07100129	07100129	1
14	Valve 1/4"	阀门1/4 "	07100115	07100115	07100115	07100115	1
13	Valve 3/8"	阀门3/8 "	07100128	07100128			1
15	Valve Support	阀门支架	1713423	1713423	01713423	01713423	1
16	Right Side Plate	右侧板组件	1302465	1303030	01302465	1303030	1
17	Wire Clamp	电线夹(中)	71010103	71010103	71010103	71010103	1
18	Insulation Fabric	绝缘垫片	70410523	70410523	70410525	70410525	1
19	Terminal Board	三位接线板 A	42011113	42011113	42011113	42011113	1
20	Electric Box	电器盒 B	1413050	1413050	01413050	01413050	1
21	capacitor	电容 100uF/400V	33310054	33310054	33310054	33310054	1
22	Electric Box	电器盒 A	20103501	20103501	20103501	20103501	1
23	PCB W922AA	控制器W922CA	30029007	30029007			1
23	PCB W922BA	控制器W922DA			30029011	30029011	1
24	Electric Box Cover	电器盒盖	1413048	1413048	01413048	01413048	1
25	Tube Sensor	室外管感温包	39000009	39000009	39000009	39000009	1
26	Sensor Insert B	感温头插片 B	42020063	42020063	42020063	42020063	1
27	Air Sensor	室外环境感温包	39000011	39000011	39000011	39000011	1
28	Sensor Support	感温包架	24215101	24215101	24215101	24215101	1
29	Compressor Sensor	压缩机感温头	39000016	39000016	39000016	39000016	1
30	Sensor Insert	感温头插片 E	42040066	42040066	42020066	42020066	1
31	Rectifier S15VB60	整流桥 S15VB60	46010601	46010601			2
31	Rectifier S25VB60	整流桥 S25VB60			46010602	46010602	2
32	Power Module TM-33	电源模块 TM-33			32210084	32210084	1
32	Power Module TL-105B	电源模块 TL-105B			32210081	32210081	1
32	Power Module TM-03	电源模块 TM-03	32210082	32210082			1
33	Reactor Box	电抗器盒	20123025	20123025	20123025	20123025	1
34	Reactor 10mH/13A	电抗器 10mH/13A			43130156	43130156	1
34	Reactor 10mH/8.5A	电抗器 10mH/8.5A	43130157	43130157			1
35	Soleplate	底板	22223401	22223401	22223401	22223401	1
36	Module Support	模块支架	24213025	24213025	24213025	24213025	1
37	Radiator	散热片	49010203	49010203	49010203	49010203	1
38	Top Cover Assy	顶盖组件	1253260	1253260	01253260	01253260	1
39	Rear Grill Assy	后护网组件	11123402	11123402	11123402	11123402	1
40	Condenser Assy	冷凝器组件	1103071	1103071			1
40	Condenser Assy	冷凝器组件			01133031	01133031	1
41	Motor Support	电机支架	01703391	01703391	01703391	01703391	1

Table 6-4 continue

No.	Description		Part No.				Qty
			KFR-25W/HF	KFR-25W/JF	KFR-32W/HF	KFR-32W/JF	
42	Self-tapping Screw	螺钉	10140165	10140165	10140165	10140165	4
43	Motor FW25F	电机FW25F	15013501	15013501	15013501	15013501	1

The data are subject to change without notice.

6.10 Circuit diagram

These circuit diagrams are subject to change without notice.
Please refer to the ones stuck on the machines.

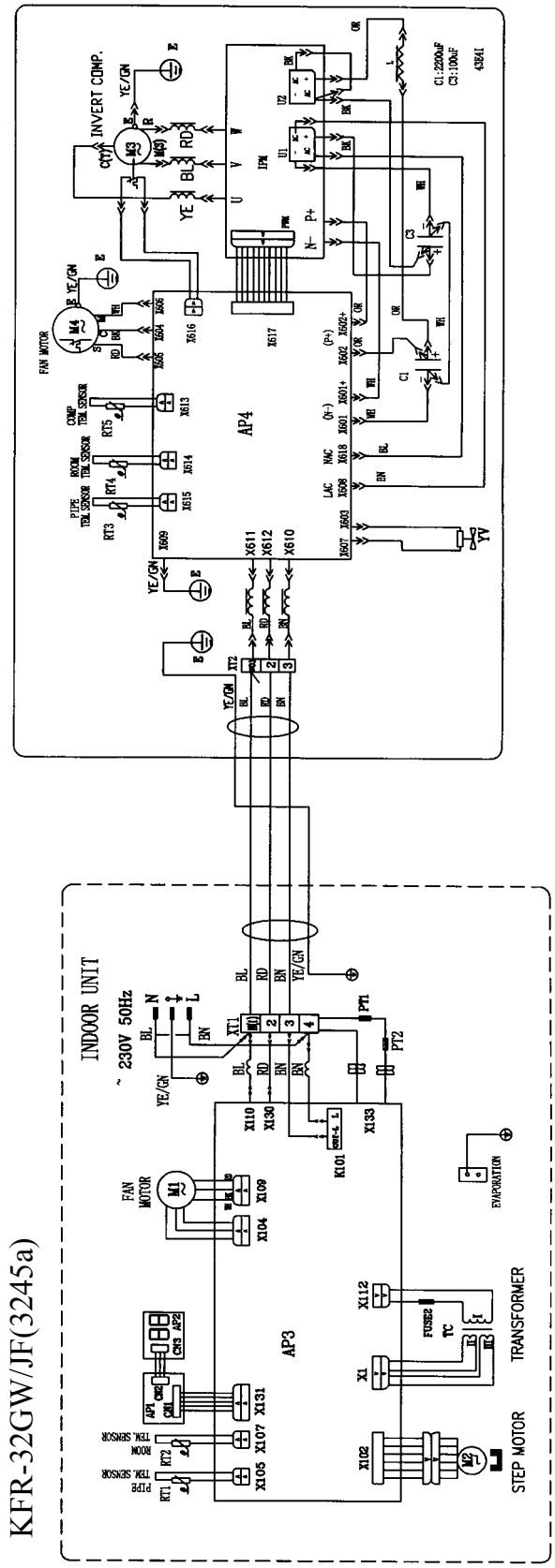

figure 6-9

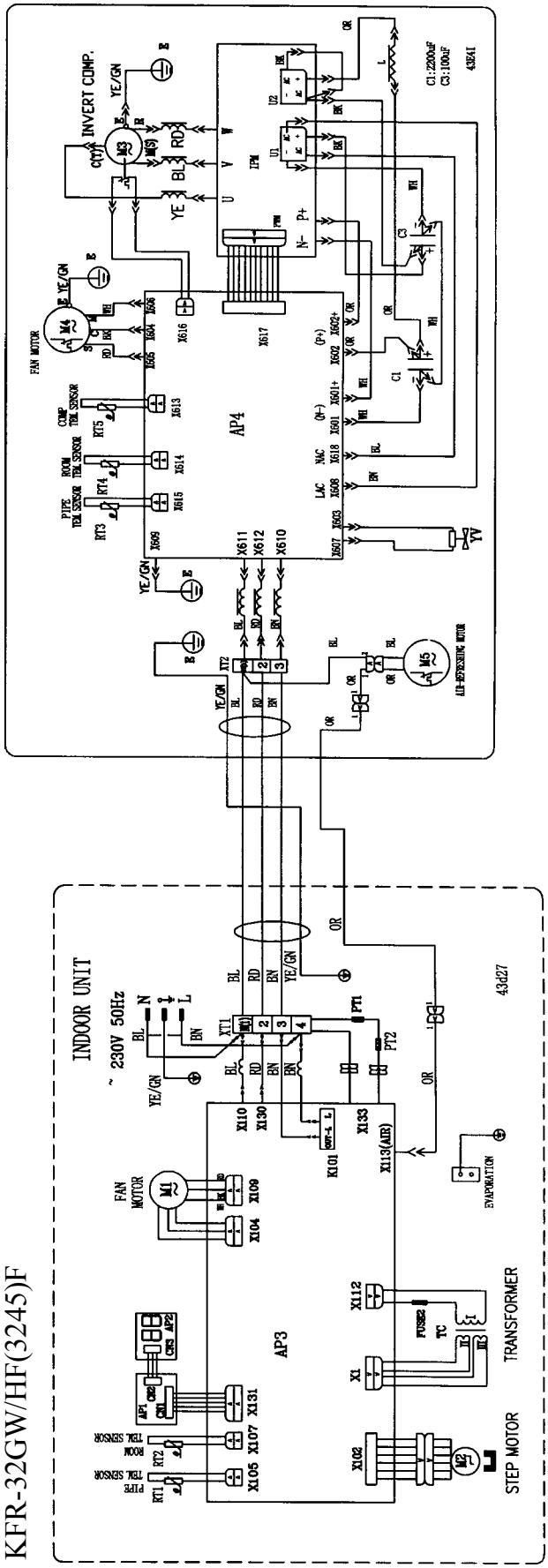
KFR-32GW/HF(3245)F
INDOOR UNIT
~ 230V 50Hz
N
L
AP3
AP4
FAN MOTOR
STEP MOTOR
TRANSFORMER
EVAPORATION
INVERT COMP.
FAN MOTOR
AIR-REFRIGERATING MOTOR
ROOM TEM. SENSOR
PIPE TEM. SENSOR
COMP TEM. SENSOR
PTC TEM. SENSOR
C1:2200uF
C2:100uF
43d27

figure 6-10

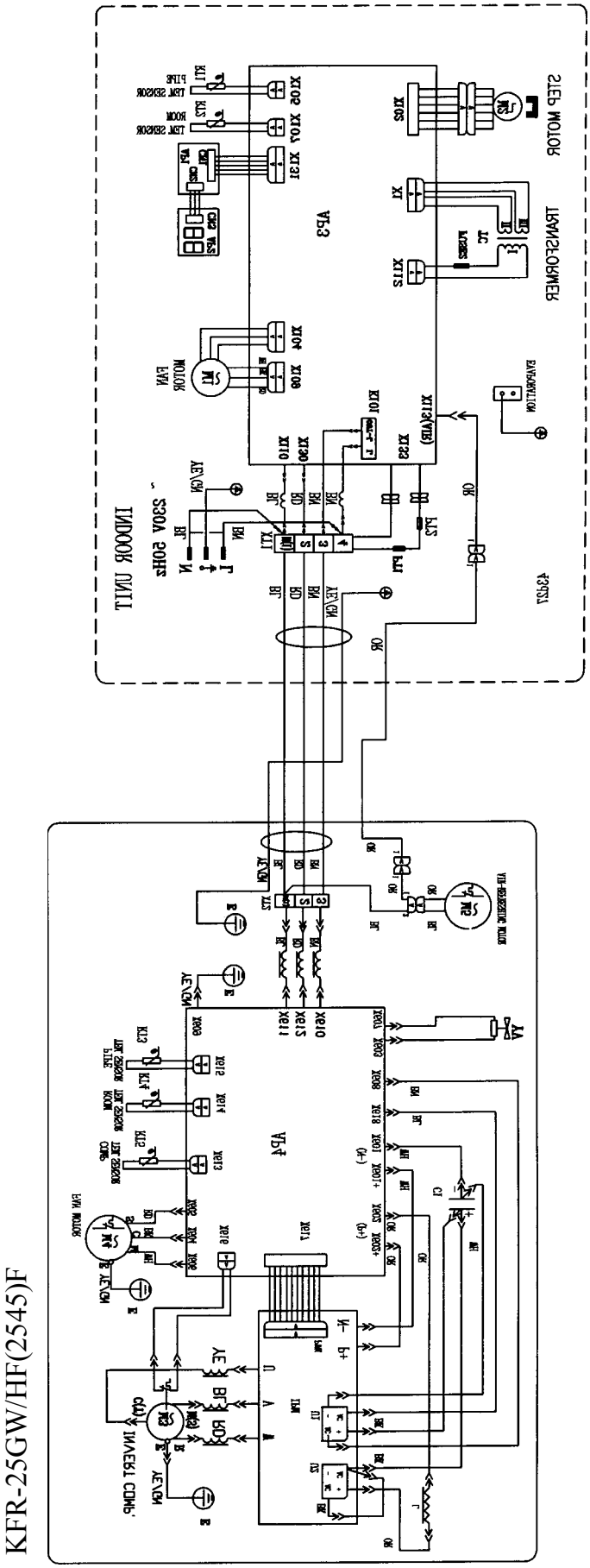
KFR-25GW/HF(2545)F
INDOOR UNIT
230V 50Hz
STEP MOTOR
TRANSFORMER
FAN MOTOR
INVERT COMP.
AP3
AP4

figure 6-11

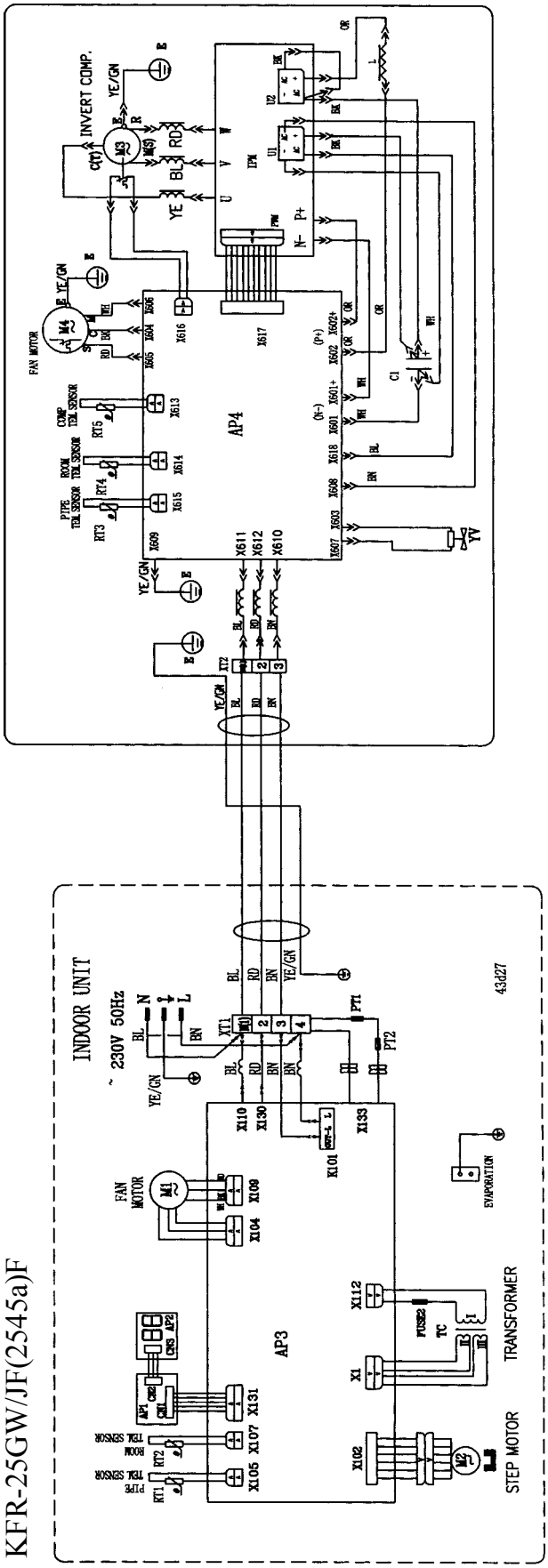
KFR-25GW/JF(2545a)F
INDOOR UNIT
~ 230V 50Hz
N
L
BL
BN
YE/GN
RD
XT1
XT2
PT1
PT2
X110
X130
X133
X101
FAN MOTOR
M1
X104
X109
AP3
X112
X1
X102
X131
X107
X105
ROOM TEMP. SENSOR
PIPE TEMP. SENSOR
RT1
RT2
FUSE2
TC
TRANSFORMER
STEP MOTOR
M2
EVAPORATION
43d27
INVERT COMP.
M3
IPM
U
V
W
P+
N-
U1
U2
C1
L
AP4
X616
X617
X613
X614
X615
X609
X611
X612
X610
X607
X603
X608
X618
X601
X602
X624
X606
X605
X604
X607
COMP TEMP. SENSOR
RT5
ROOM TEMP. SENSOR
RT4
PIPE TEMP. SENSOR
RT3
FAN MOTOR
M4
CT1
CT2
OR
WH
GR

figure 6-12

6.11 PCB function manual

The PCB function manual of the airfresh-inverter conditioner

1. Running mode:

1) COOL; 2) DRY; 3) FAN; 4) HEAT; 5) AUTO;6)MANUAL OPERATION

2. Controlling contents:

1) indoor unit fan motor(Total A,B,C,D 4 speeds from high to low). Heat mode:(A,B,C,D ,4 speed). Cool mode:(A,B,C, 3 speed);Dry mode: (C ,1speed). Auto mode :(from A to C , according to the compressor's frequency)
   12000BTU model A=1100rpm B=900rpm C=800rpm D=600rpm
   9000BTU model A=1000rpm B=850rpm C=750rpm D=600rpm
2) swing fan motor;
3) outdoor unit fan motor
4) compressor;
5) electrical heater;
6) fresh air fan motor;
7) anion creator (air cleaner).
8) buzzer
9) bower of outdoor unit
10) 4-way reversing valve

3. The parameter to be input:

1) the ambient temperature of the indoor unit and outdoor (Tin,Tout)
2) the evaporator temperature of the indoor unit (shorten form is T_{eva});
3) the set temperature of the indoor (shorten form is T_{set});
4) the temperature of the condenser (shorten form is T_{con})
5) the temperature of the compressor
6) the set mode
7) fan speed
8) timer mode
9) set time
10) state of guide louver
11) total current I It

4. Drawing of refrigeration system and sensor

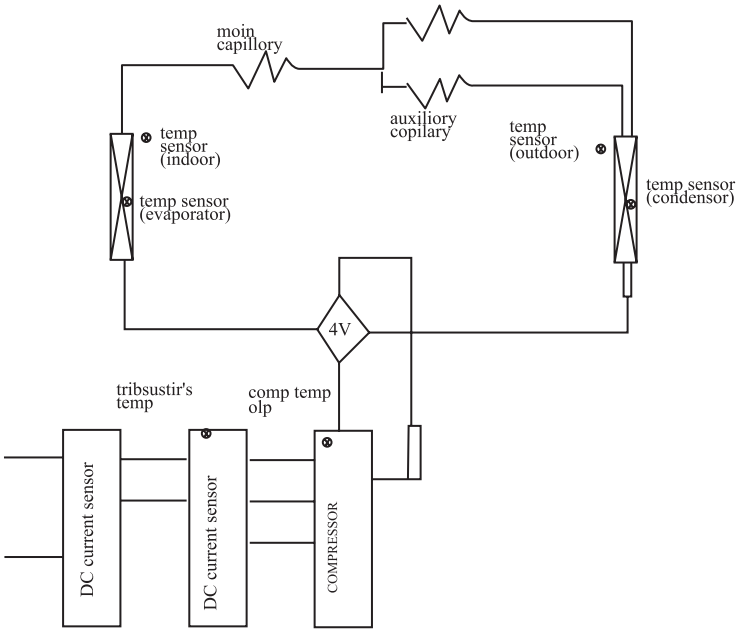

5. The basal control modes:

1)Cooling mode

(1)If $T_{in} \geqslant T_{set}$, cooling mode act, compressor and outdoor fan motor run, and indoor fan motor run in the set speed; compressor run at 58 Hz frequency ,1min later run at the correct frequency according to the changing of **Tin** and **Tset**,.

a) If $T_{set} < T_{in} < T_{set}+0.5$℃, cooling mode act, compressor run at set frequency F1.

b) If $T_{set}+0.5$℃$< T_{in} < T_{set}+1$℃, cooling mode act, compressor run at set frequency F2

c) If $T_{in} \geqslant T_{set}+1$℃cooling mode act, compressor run at the max frequency Fmax.

(2)If $T_{in} \leqslant T_{set}-2$℃, the unit will be stop from cooling mode, compressor stop ,outdoor fan motor stop 30sec later, and indoor unit still run in the low speed;

(3)If **Tset-2**℃$< T_{in} < T_{set}$, keep running in the primary mode;

2,In the cooling mode, the range of Tset is 16℃~30℃. Primary set temperature is 24℃.

3,The speed of compressor's frequency convert:

up or down at 1Hz/sec

4,frequency at standard rating :Fc=80Hz

5,Fmax=95Hz

6,when the indoor unit motor run at low speed ,the frequency is F=75Hz.

The protecting functions:

① **Avoiding freezing:**

At cooling and dry mode ,Once the compressor works for 8min, when Teva≤0℃ for over 3min, the compressor and the outdoor unit fan motor stop. at the cooling mode, the indoor unit fan motor and swing motor run in the set speed. At the dry mode , indoor fan motor run at low speed ,swing motor keep the primary mode. when Teva ≥8℃,air conditioner restart automatically.

② **The protection of overload current (total current rise ,frequency down):** When the **It**≥B, forbid the frequency to rise , When the **It**≥C, the frequency will be down to a level ,if the current continue to rise ,then frequency will be down to lower .if current is litter than the set current and room temperature is higher, then the frequency will rise. If room temperature continue to rise, frequency rise too. If the current is more than a set value, then frequency will be down again. recycle etc. If **It**≥D ,compressor stop, outdoor unit fan motor stop 30 sec latter.

12000BTU B=8A C=9A D=10A

9000BTU B=6A C=7A D=8A

before the compressor's frequency can be changed, it must be jarless for 30 sec. But the frequency must be reduced immediately when it need protection . (no 30sec waiting).

2)Drying mode:

① If T_{in}＞T_{set}, drying mode act, compressor and outdoor fan motor run, and indoor fan motor run in the set speed; compressor run at 55Hz frequency;

② If T_{set}-2℃≤T_{in}≤T_{set}, ;keep the primary mode

③ If T_{in} ＜ T_{set}-2℃, compressor stop, outdoor unit fan motor stop 30 sec latter. indoor unit fan motor run at low speed.

2,In drying mode, the range of Tset is 16℃~30℃. Primary set temperature is 24℃.

3,The speed of compressor's frequency convert:

up or down at 1Hz/sec

4,before the compressor's frequency can be changed, it must be jarless for 30 sec

Protection

1,Protection of Avoiding freezing in drying mode:

As the same as cooling mode

2, **The protection of overload current (total current rise ,frequency down):**

As the same as cooling mode

3)FAN mode

1,IN this mode, indoor fan motor can run at high,mid low,or auto mode. compressor and outdoor fan motor both stop.

2,control condition of auto fan mode:

T_{in} ＞ T_{set}+4℃, high fan speed

T_{set}+2℃≤ T_{in} ≤ T_{set}+4℃,mid fan speed

T_{in}<T_{set}+2℃,low fan speed

In fan mode, the range of Tset is 16℃~30℃. Primary set temperature is 24℃.

4)Heating mode:

1,If $T_{in} \leqslant T_{set}+1$℃, heating mode act, reversing valve, compressor and outdoor unit fan motor run, indoor unit fan motor run at set speed in the condition of avoiding the cold wind; compressor start to run at 20Hz and increase gradually at a speed of 1Hz/s.Aftter compressor run at 58 Hz frequency 1min later ,then compressor run at the correct frequency according to the changing of **Tin** and **Tset**.

a) $T_{set} \leqslant T_{in} \leqslant T_{set}+0.5$℃, compressor run at F3

b) $T_{set}+0.5$℃$\leqslant T_{in} \leqslant T_{set}+1$℃, compressor run at F2

c) $T_{set}+1$℃$\leqslant T_{in} \leqslant T_{set}+1.5$℃, compressor run at F1

d) $T_{set} \leqslant T_{in} \leqslant T_{set}-1.5$℃, compressor run at F0

e) If $T_{in}T_{set}+2$℃, compressor stops, outdoor fan stops in 30 seconds, indoor fan runs at blowing surplus heat mode, the Led of compressor running switched off.

2. compressor frequency changing rate:

compressor frequency changes up and down at the rate of 1Hz/sec.

3. the designated frequency Fc of rated heating is 90HZ.
4. the maximum frequency Fmax is 100 HZ.
5. defrosting condition and process.

when the machine is in heating mode for 45 minutes ,it begins to detect the temperature of outdoor exchange .the lasting time of Teva ≤–8 ℃ is over 3 minutes ,it begins to defrost, compressor stops, outdoor fan and 4-way valve stop,30s later, compressor starts and runs at the frequency of 95Hz,the Led of indoor running keeps flashing. when compressor runs for 6 minutes or $T_{eva} \geqslant$ 10℃, compressor stops ,30s later,4-way valve is on ,the Led of indoor running stops flashing. another 30 s later, compressor and outdoor fan keeps running ,indoor fan runs at the anti-cool air mode.

6. in this mode , the set temperature range is 16-30℃, the initial value is 24℃.
7. anti-cool air condition: after compressor starts running for 30s, indoor fan runs at the set speed, after compressor starts running for 1 minutes, indoor fan runs at the set speed, swing motor runs at the set mode.
8. blowing surplus heat: indoor fan runs at the smallest speed for 90s,then it stops, swing motor turns the air guider to the horizontal position.
9. auxiliary heater working condition: in heating mode, when indoor fan is running at high or medium speed, and the indoor temperature Tin≤25℃ or indoor heat exchanger T_{con} ≤50 ℃ , auxiliary heater is switched on. If compressor stops, indoor runs at the smallest speed or in low speed or not running or Tin ≥ 28℃Tcon ≥ 56 ℃ ,auxiliary heater stops. after the auxiliary heater being switched off ,it can not be switched on for at least 2 minutes

protection:

1. when the current increases and frequency decreases ,the protection is :

when the current is over the rated value, I ⩾X ,it forbids frequency increase, when I⩾Y, the frequency decreases to the lower level ,if current continues rising ,the frequency will go down further until the current reached stability and less than the speculated value.
In this condition, if room temperature is very low ,the frequency increases to the upper level, if room temperature drops further, the frequency will goes up further. when the current is over the speculated value, the frequency will goes down to the lower level ,and so on and on:
When I⩾Z, compressor stops,30s later ,outdoor fan stops,
12000BTU
X=11A ,Y=12A ,Z=13A
9000BTU
X=8A ,Y=9A ,Z=10A

When frequency changes to a level , it should be in this level for at least 30s and it can change the level. but in protection mode, frequency can changes to a level and then to another level , it doesn't need 30s waiting time.

AUTO funcion
1. condition and process of AUTO mode
cooling Tset =25℃ ,heating Tset=20℃.

a. when Tin＞T_{set}**+1**℃, it is in cooling mode, the set temperature is 25.when Tin⩽ T_{set}**-2**℃**,**compressor and outdoor fan stops running ,indoor fan runs at set speed.

When T_{set}**-2**℃＜T_{in}⩽T_{set}**+1**℃**,**it keeps the original running status.

b. when Tin⩽T_{set} ,it is heating mode, the set temperature is 20 ,when T_{in}⩾T_{set}**+3**℃, compressor stops,30s later, outdoor fan stops, indoor fan runs at blowing surplus heat mode.

When T_{set}＜T_{in}＜T_{set}**+3**℃**,** it keeps the original state.

2. in this mode, you can press TEMP (∧ or ∨) button to increase or decrease the set temperature by 1 or 2 ℃

protection.
When it run in cooling, its function is same with cooling mode.
When it run in heating, its function is same with heating mode.
When ambient temperature changes, mode changing has the priority. when compressor starts, there is no function of 6 minutes control.

7.Dual Split birdline Series

7.1 Summary.

figure 7-1

MODEL		NOTE
KF-20 × 2GW/A12	KFR-20 × 2GW/A12	CE STANDARD
KF-25 × 2GW/A12	KFR-25 × 2GW/A12	1Ph 220-230V~50Hz
KF-32 × 2GW/A12	KFR-32 × 2GW/A12	R22
KF-20 × 2GW/NA12	KFR-20 × 2GW/NA12	CE STANDARD
KF-25 × 2GW/NA12	KFR-25 × 2GW/NA12	1Ph 220-230V~50Hz
KF-32 × 2GW/NA12	KFR-32 × 2GW/NA12	R407C
GSW(9 × 2)-22L/A		1Ph 220V~60Hz
GSW(9 × 2)-22R/A		R22

7.2 Technical specifications.

Table 7-1

Model			KF-20 × 2GW/A12	KFR-20 × 2GW/A12	
Function			Cooling	Cooling	Heating
Power supply			1Ph,230V~50Hz		
Capacity(W)			2000 × 2	2000 × 2	2300 × 2
Rated input(W)			750 × 2	750 × 2	790 × 2
Rated current(A)			3.26 × 2	3.26 × 2	3.43 × 2
Air flow(m^3/h)			400	400	400
Dehumidifying volume(L/h)			0.7	0.76	---
EER(W/W)			2.83	2.82	2.87
Indoor unit	Model		KF-20x2G/A12	KFR-20x2G/A12	
	Motor fan speed(rpm)		960/900/850		
	Output power(W)		8		
	Fan type/piece		Cross flow fan-1		
	Diameter-length(mm)		ϕ 97mm-585		
	Evaporator		Aluminum fin-copper tube		
	Row-fin distance(mm)		2-1.6		
	Working area(m^2)		0.14		
	Swing motor		MP24GA		
	Input/speed(W)		2		
	Fuse(A)		Controller 3.15A Transformer 0.2A		
	Working capacitor(μF)		1		
	Noise(dB(A))		36		
	Dimension(width-height-depth)(mm)		770-250-180		
	Net weight(Kg)		8.5		
Outdoor unit	Model		KF-20 × 2W/A12	KFR-20x2W/A12	
	Input power(W)		700 × 2	700 × 2	745 × 2
	Current(A)		3.35 × 2	3.35 × 2	3.3 × 2
	L.R.A.(A)		12	15	
	Throttling method		Capillary		
	Compressor model		Rotary		
	Compressor		SG433EB2	SG433EB2	
	Starting method		Cupacitor starting		
	Working temp.		⩽ 115℃		
	Condenser		Aluminum fin-copper tube		
	Pipe-diameter		9.52	9.52	
	Row-fin distance(mm)		1-1.8		
	Working area(m^2)		0.4		
	Fan motor power(W)/speed(rpm)		25/780		
	Type-piece		Axial fan-1		
	Diameter(mm)		450		
	Defrosting method		Auto defrost		
	Noise(dB(A))		57		
	Dimension(width-height-depth)(mm)		950-710-412		
	Net weight(kg)		65		
	Refrigerant charge (kg)		R22/0.65x2kg	R22/0.9x2kg	
Connecting pipe	Length(m)		4		
	Outer diameter of connecting pipe	Liquid pipe(mm)	6(1/4")		
		Gas pipe(mm)	9.52(3/8")		
	Max distance	Height(m)	5		
		Length(m)	10		

The technical date are subject to change without notice .Please refer to the nameplate of the unit.

Table 7-2

Model			KF-25x2GW/A12	KFR-25x2GW/A12	
Function			Cooling	Cooling	Heating
Power supply			1Ph,230V~50Hz		
Capacity(W)			2500 × 2	2500 × 2	2900 × 2
Rated input(W)			1080 × 2	1080 × 2	1050 × 2
Rated current(A)			4.8 × 2	4.8 × 2	5.8 × 2
Air flow(m^3/h)			450		
Dehumidifying volume(L/h)			1.2	1.2	---
EER(W/W)			2.31	2.31	2.76
Indoor unit	Model		KF-25 × 2G/A12	KFR-25 × 2G/A12	
	Motor fan speed(rpm)		1060/990/910		
	Output power(W)		8		
	Fan type/piece		Cross flow fan-1		
	Diameter-length(mm)		ϕ 97mm-583		
	Evaporator		Aluminum fin-copper tube		
	Row-fin distance(mm)		2-1.6		
	Working area(m^2)		0.14		
	Swing motor		FN13B		
	Input/speed(W)		2		
	Fuse(A)		Controller 3.15A Transformer 0.2A		
	Working capacitor(μF)		1		
	Noise(dB(A))		⩽ 38		
	Dimension(width-height-depth)(mm)		770-250-180		
	Net weight(Kg)		8.5		
Outdoor unit	Model		KF-25 × 2W/A12	KFR-25 × 2W/A12	
	Input power(W)		1050	1050	1000
	Current(A)		4.8	4.8	4.5
	L.R.A.(A)		23	23	23
	Throttling method		Capillary		
	Compressor		RH174VHAC	RH174VHAC	
	Starting method		Capacitor starting		
	Working temp.		⩽ 115℃		
	Condenser		Aluminum fin-copper tube		
	Pipe-diameter		9.52		
	Row-fin distance(mm)		1-2.0	1-1.6	
	Working area(m^2)		0.4		
	Fan motor power(W)/speed(rpm)		30/780	30/780	
	Type-piece		Axial fan-1		
	Diameter(mm)		450		
	Defrosting method		Auto defrost		
	Noise(dB(A))		65		
	Dimension(width-height-depth)(mm)		950-710-412		
	Net weight(kg)		65		
	Refrigerant charge (kg)		R22/0.8 × 2kg	R22/0.9 × 2kg	
Connecting pipe	Length(m)		4		
	Outer diameter of connecting pipe	Liquid pipe(mm)	6(1/4")		
		Gas pipe(mm)	9.52(3/8")		
	Max distance	Height(m)	5		
		Length(m)	10		

The technical date are subject to change without notice .Please refer to the nameplate of the unit.

Table 7-3

Model			KF-32x2GW/A12	KFR-32x2GW/A12	
Function			Cooling	Cooling	Heating
Power supply			1Ph,230V~50Hz		
Capacity(W)			3200 × 2	2500 × 2	2900 × 2
Rated input(W)			1380 × 2	1080 × 2	1050 × 2
Rated current(A)			6.4 × 2	8.5 × 2	8.5 × 2
Air flow(m^3/h)			480		
Dehumidifying volume(L/h)			1.2	1.2	---
EER(W/W)			2.31	2.31	2.76
Indoor unit	Model		KF-32 × 2G/A12	KFR-32 × 2G/A12	
	Motor fan speed(rpm)		1190/1090/990		
	Output power(W)		8		
	Fan type/piece		Cross flow fan-1		
	Diameter-length(mm)		ϕ 97mm-583		
	Evaporator		Aluminum fin-copper tube		
	Row-fin distance(mm)		2-1.6		
	Working area(m^2)		0.14		
	Swing motor		FN14A		
	Input/speed(W)		2		
	Fuse(A)		Controller 3.15A Transformer 0.2A		
	Working capacitor(μF)		1		
	Noise(dB(A))		⩽ 42		
	Dimension(width-depth-height)(mm)		770-250-180		
	Net weight(Kg)		8.5		
Outdoor unit	Model		KF-32 × 2W/A12	KFR-23 × 2W/A12	
	Input power(W)		1380	1380	1490
	Current(A)		3.66	3.66	4.26
	L.R.A.(A)		29	29	29
	Throttling method		Capillary		
	Compressor		C-RV232BH1AA	C-RV232BH1AA	
	Starting method		Capacitor starting		
	Working temp.		⩽ 115℃		
	Condenser		Aluminum fin-copper tube		
	Pipe-diameter		12		
	Row-fin distance(mm)		2-1.8	2-1.8	
	Working area(m^2)		0.4		
	Fan motor power(W)/speed(rpm)		30/780	30/780	
	Type-piece		Axial fan-1		
	Diameter(mm)		450		
	Defrosting method		Auto defrost		
	Noise(dB(A))		60		
	Dimension(width-height-depth)(mm)		950-840-412		
	Net weight(kg)		72		
	Refrigerant charge (kg)		R22/1.0 × 2kg	R22/1.05 × 2kg	
Connecting pipe	Length(m)		4		
	Outer diameter of connecting pipe	Liquid pipe(mm)	6(1/4")		
		Gas pipe(mm)	12(1/2")		
	Max distance	Height(m)	5		
		Length(m)	10		

The technical date are subject to change without notice .Please refer to the nameplate of the unit.

Table 7-4

Model			KF-20 × 2GW/NA12	KFR-20 × 2GW/NA12	
Function			Cooling	Cooling	Heating
Power supply			1Ph,230V~50Hz		
Capacity(W)			2000	2000	2500
Rated input(W)			850	850	920
Rated current(A)			3.7		3.6
Air flow(m^3/h)			410	440	
Dehumidifying volume(L/h)			0.7		
EER(W/W)			2.5	2.8	
Indoor unit	Model		KF-20 × 2G/NA12	KFR-20 × 2G/NA12	
	Motor fan speed(rpm)		1060/990/910		
	Output power(W)		8		
	Fan type/piece		Cross flow fan-1		
	Diameter-length(mm)		ϕ 97mm-583		
	Evaporator		Aluminum fin-copper tube		
	Row-fin distance(mm)		2-1.6		
	Working area(m^2)		0.14		
	Swing motor		MP24GA		
	Input/speed(W)		2		
	Fuse(A)		Controller 3.15A Transformer 0.2A		
	Working capacitor(μF)		1		
	Noise(dB(A))		38		
	Dimension(width-height-depth)(mm)		770-250-180		
	Net weight(Kg)		8.5		
Outdoor unit	Model		KF-20 × 2W/NA12	KFR-20 × 2W/NA12	
	Input power(W)		810	810	860
	Current(A)		3.53	3.53	3.41
	L.R.A.(A)		19.5		
	Throttling method		Capillary		
	Compressor model		Rotary		
	Compressor		C-1RN70H5A		
	Starting method		Capacitor starting		
	Working temp.		⩽ 115℃		
	Condenser		Aluminum fin-copper tube		
	Pipe-diameter		9.52		
	Row-fin distance(mm)		1-1.8		
	Working area(m^2)		0.65		
	Fan motor power(W)/speed(rpm)		80/790		
	Type-piece		Axial fan-1		
	Diameter(mm)		450		
	Defrosting method		Auto defrost		
	Noise(dB(A))		58		
	Dimension(width-height-depth)(mm)		950-710-412		
	Net weight(kg)		65		
	Refrigerant charge (kg)		R407C/0.7 × 2kg	R407C/0.82 × 2kg	
Connecting pipe	Length(m)		4		
	Outer diameter of connecting pipe	Liquid pipe(mm)	6(1/4")		
		Gas pipe(mm)	9.52(3/8")		
	Max distance	Height(m)	5		
		Length(m)	10		

The technical date are subject to change without notice .Please refer to the nameplate of the unit.

Table 7-5

Model			KF-25 × 2GW/NA12	KFR-25 × 2GW/NA12	
Function			Cooling	Cooling	Heating
Power supply			1Ph,230V~50Hz		
Capacity(W)			2500	2500	2900
Rated input(W)			1100	1080	1060
Rated current(A)			4.5	4.45	4.55
Air flow(m^3/h)			410	450	
Dehumidifying volume(L/h)			1.2		
EER(W/W)			2.5	2.8	
Indoor unit	Model		KF-25 × 2G/NA12	KFR-25 × 2G/NA12	
	Motor fan speed(rpm)		1060/990/910		
	Output power(W)		8		
	Fan type/piece		Cross flow fan-1		
	Diameter-length(mm)		ϕ 97mm-583		
	Evaporator		Aluminum fin-copper tube		
	Row-fin distance(mm)		2-1.6		
	Working area(m^2)		0.14		
	Swing motor		MP24GA		
	Input/speed(W)		2		
	Fuse(A)		Controller 3.15A Transformer 0.2A		
	Working capacitor(μF)		1		
	Noise(dB(A))		38		
	Dimension(width-height-depth)(mm)		770-250-180		
	Net weight(Kg)		8.5		
Outdoor unit	Model		KF-25 × 2W/NA12	KFR-25 × 2W/NA12	
	Input power(W)		1030	1030	1020
	Current(A)		4.2		4.4
	L.R.A.(A)		23		
	Throttling method		Capillary		
	Compressor model		Rotary		
	Compressor		C-RN80H5A		
	Starting method		Capacitor starting		
	Working temp.		⩽ 115℃		
	Condenser		Aluminum fin-copper tube		
	Pipe-diameter		9.52		
	Row-fin distance(mm)		1-1.8		
	Working area(m^2)		0.65		
	Fan motor power(W)/speed(rpm)		80/790		
	Type-piece		Axial fan-1		
	Diameter(mm)		400		
	Defrosting method		Auto defrost		
	Noise(dB(A))		58		
	Dimension(width-height-depth)(mm)		950-710-412		
	Net weight(kg)		65		
	Refrigerant charge (kg)		R407C/0.85	R407C/0.92	
Connecting pipe	Length(m)		4		
	Outer diameter of connecting pipe	Liquid pipe(mm)	6(1/4")		
		Gas pipe(mm)	9.52(3/8")		
	Max distance	Height(m)	5		
		Length(m)	10		

The technical date are subject to change without notice .Please refer to the nameplate of the unit.

Table 7-6

Model			KF-32 × 2GW/NA12	KFR-32 × 2GW/NA12	
Function			Cooling	Cooling	Heating
Power supply			1Ph,230V~50Hz		
Capacity(W)			3200 × 2	3200 × 2	3800 × 2
Rated input(W)			1510 × 2	1390 × 2	1490 × 2
Rated current(A)			6.3 × 2	6.2 × 2	6.6 × 2
Air flow(m^3/h)			500		
Dehumidifying volume(L/h)			1.4		
EER(W/W)			2.4	2.4	2.6
Indoor unit	Model		KF-32 × 2G/NA12	KFR-32 × 2G/NA12	
	Motor fan speed(rpm)		1190/1090/990		
	Output power(W)		14		
	Fan type/piece		Cross flow fan-1		
	Diameter-length(mm)		ϕ 97mm-583		
	Evaporator		Aluminum fin-copper tube		
	Row-fin distance(mm)		2-1.4		
	Working area(m^2)		0.14		
	Swing motor		MP24GA		
	Input/speed(W)		2		
	Fuse(A)		Controller 3.15A Transformer 0.2A		
	Working capacitor(μF)		1		
	Noise(dB(A))		41		
	Dimension(width-height-depth)(mm)		770-250-180		
	Net weight(Kg)		8.5		
Outdoor unit	Model		KF-32 × 2W/NA12	KFR-32 × 2W/NA12	
	Input power(W)		1440 × 2	1280 × 2	1420 × 2
	Current(A)		6 × 2	5.8 × 2	6.3 × 2
	L.R.A.(A)		33.5		
	Throttling method		Capillary		
	Compressor model		Rotary		
	Compressor		C-RN110H5B		
	Starting method		Capacitor starting		
	Working temp.		⩽ 115℃		
	Condenser		Aluminum fin-copper tube		
	Pipe-diameter		9.52		
	Row-fin distance(mm)		1-1.6		
	Working area(m^2)		0.65		
	Fan motor power(W)/speed(rpm)		60/780		
	Type-piece		Axial fan-1		
	Diameter(mm)		450		
	Defrosting method		Auto defrost		
	Noise(dB(A))		60		
	Dimension(width-height-depth)(mm)		950-840-412		
	Net weight(kg)		72		
	Refrigerant charge (kg)		R407C/1.20 × 2kg	R407C/1.25kg × 2kg	
Connecting pipe	Length(m)		4		
	Outer diameter of connecting pipe	Liquid pipe(mm)	6(1/4")		
		Gas pipe(mm)	12(1/2")		
	Max distance	Height(m)	5		
		Length(m)	10		

The technical date are subject to change without notice .Please refer to the nameplate of the unit.

Table 7-7

Model			GSW(9 × 2)-22L/A	GSW(9 × 2)-22R/A	
Function			Cooling	Cooling	Heating
Power supply			1Ph,220V~60Hz		
Capacity(W)			2500 × 2	2500 × 2	2900 × 2
Rated input(W)			870 × 2	970 × 2	1050 × 2
Rated current(A)			4.03	4.2	4.3
Air flow(m^3/h)			450		
Dehumidifying volume(L/h)			1.2	1.2	---
EER(W/W)			2.78	2.9	3.3
Indoor unit	Model		GSW(9×2)-22L/A(I)	GSW(9 × 2)-22R/A(I)	
	Motor fan speed(rpm)		1050/960/900		
	Output power(W)		8		
	Fan type/piece		Cross flow fan-1		
	Diameter-length(mm)		ϕ 97mm-583		
	Evaporator		Aluminum fin-copper tube		
	Row-fin distance(mm)		2-1.6		
	Working area(m^2)		0.14		
	Swing motor		MP24GA		
	Input/speed(W)		2		
	Fuse(A)		Controller 3.15A Transformer 0.2A		
	Working capacitor(μF)		1		
	Noise(dB(A))		⩽ 36	⩽ 37	
	Dimension(width-depth-height)(mm)		770-250-180		
	Net weight(Kg)		8.5		
Outdoor unit	Model		GSW(9×2)-22L/A(O)	GSW(9 × 2)-22R/A(O)	
	Input power(W)		908	919	
	Current(A)		4.17	4.18	
	L.R.A.(A)		26	26	
	Throttling method		Capillary		
	Compressor		2P14S236A1J	2P14S236A1J	
	Starting method		Capacitor starting		
	Working temp.		⩽ 115℃		
	Condenser		Aluminum fin-copper tube		
	Pipe-diameter		9.52		
	Row-fin distance(mm)		2-1.8		
	Working area(m^2)		0.4		
	Fan motor power(W)/speed(rpm)		60/780	60/780	
	Type-piece		Axial fan-1		
	Diameter(mm)		450		
	Defrosting method		Auto defrost		
	Noise(dB(A))		56	58	
	Dimension(width-height-depth)(mm)		950-710-412		
	Net weight(kg)		65		
	Refrigerant charge (kg)		R22/0.85 × 2kg	R22/0.95 × 2kg	
Connecting pipe	Length(m)		4		
	Outer diameter of connecting pipe	Liquid pipe(mm)	6(1/4")		
		Gas pipe(mm)	9.52(3/8")		
	Max distance	Height(m)	5		
		Length(m)	10		

The technical date are subject to change without notice .Please refer to the nameplate of the unit.

7.3 Performance curve

The change relation between low pressure, operation current and temp.
Cooling operation condition:In testing, indoor and outdoor have same work condition.

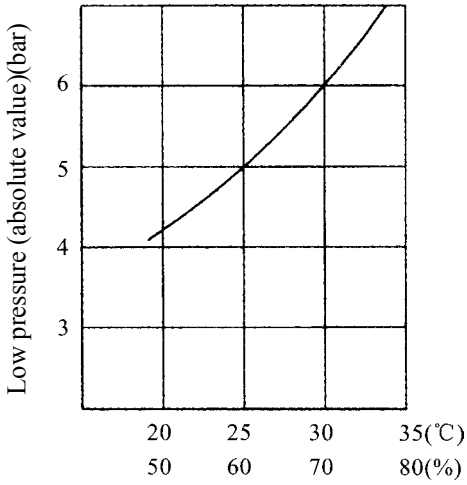

Dry bulb temp./ humidity
(a)

Heating operation
Indoor work condition:dry bulb temp. 21, wet bulb temp. 15.5

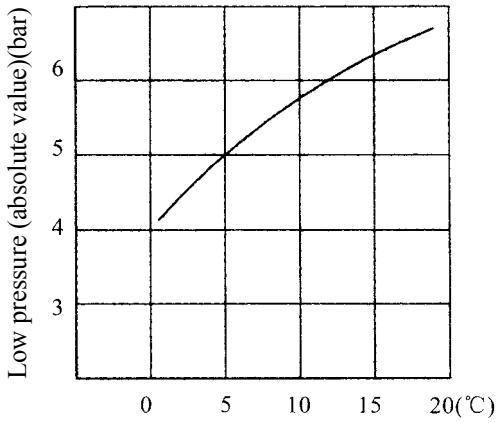

Outdoor dry bulb temp.
(b)

figure 7-2

Cooling performance
Indoor Relative humidity50%

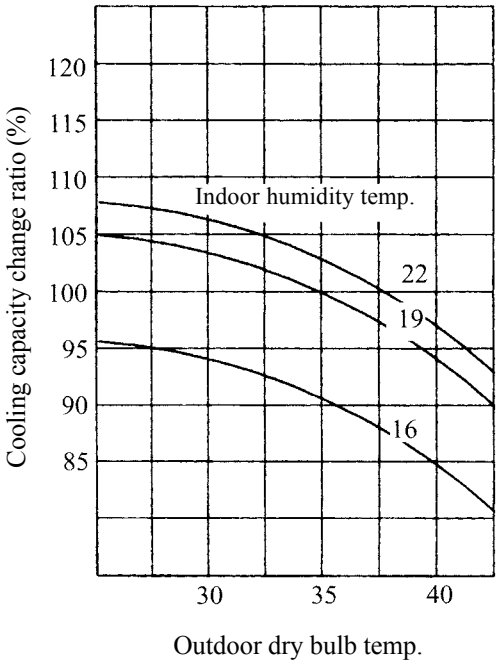

(a)

Heating performance (not including electric heater) Outdoor relative humidity 85%

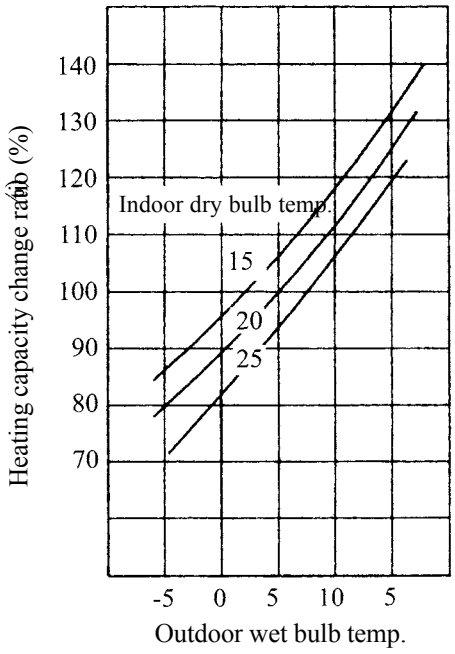

(b)

Cooling performance
Indoor Relative humidity50%

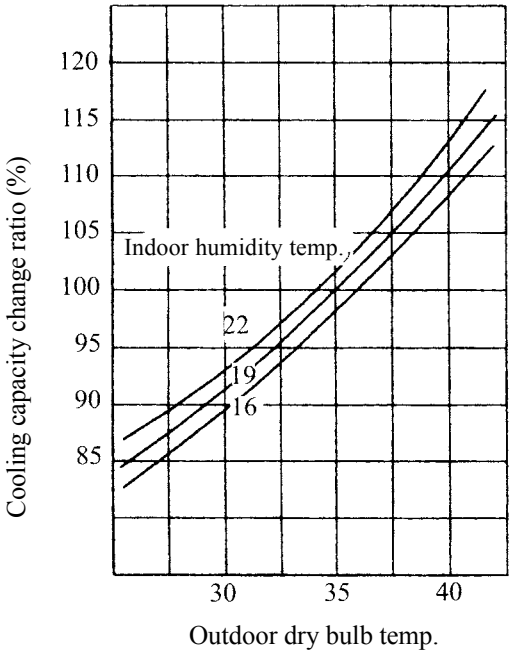

(c)

Heating performance (not including electric heater)
Outdoor relative humidity 85%

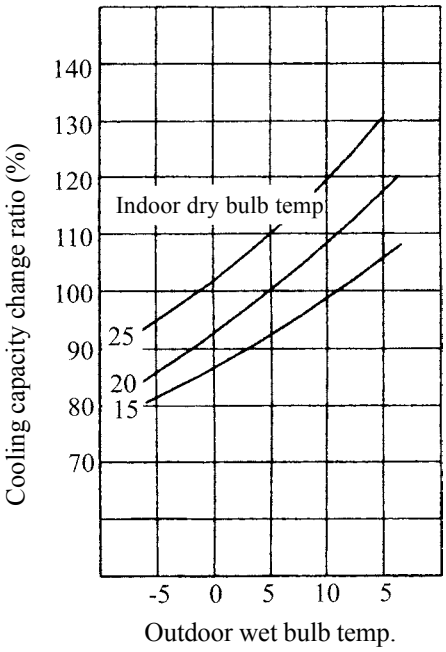

(d)

figure 7-3

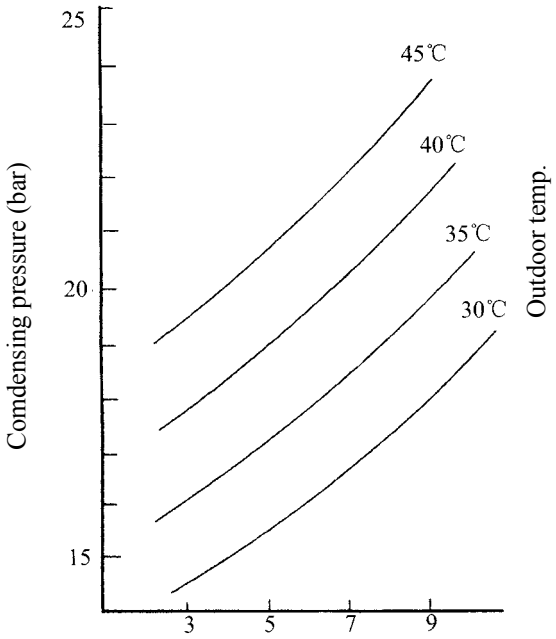

The affection to the charging quantity by pressure under cooling work condition.
(Indoor work condition:dry bulb 27℃,wet bulb 19.5℃)
(e)

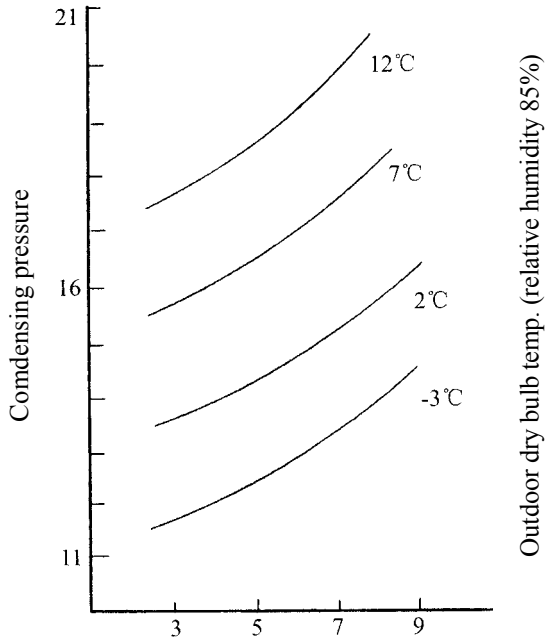

The affection to the charging quantity by pressure under cooling work condition.
(Indoor work condition:dry bulb 21℃)
(f)

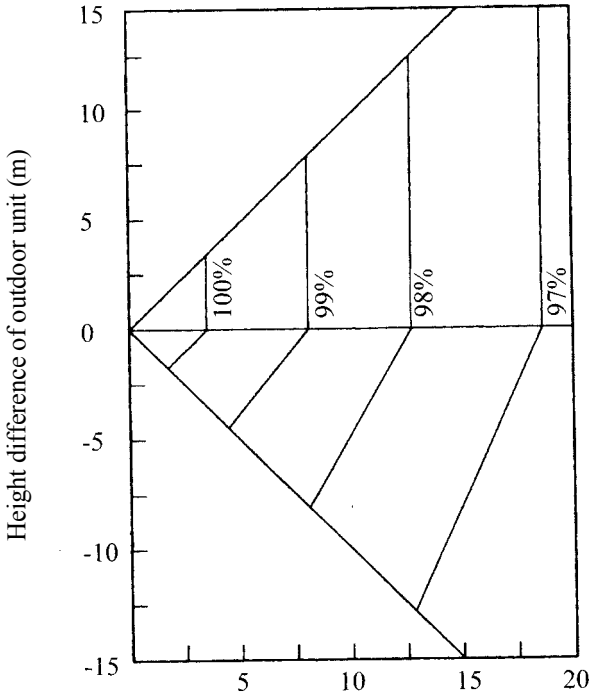

(g)

The length of connection pipe
Cooling capacity vary with the length of connection pipe

figure 7-4

7.4 Outlines and dimensions of indoor unit

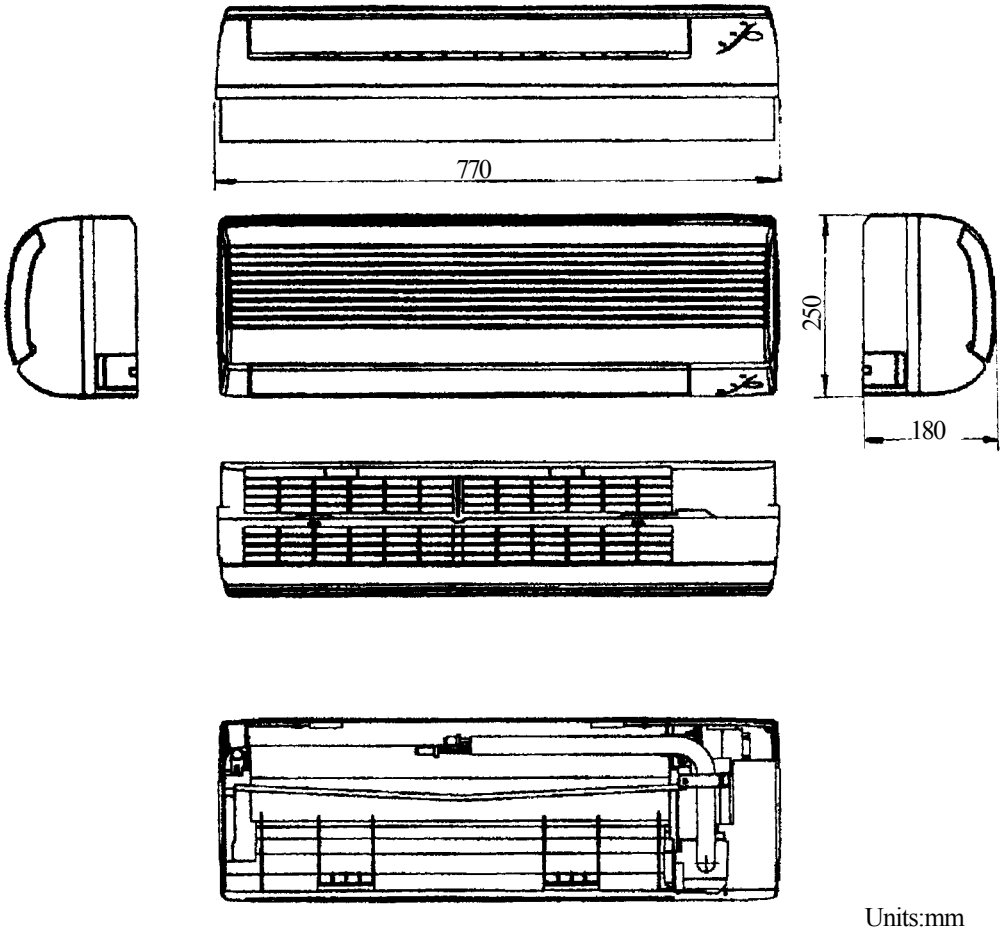

Units:mm

Ceiling

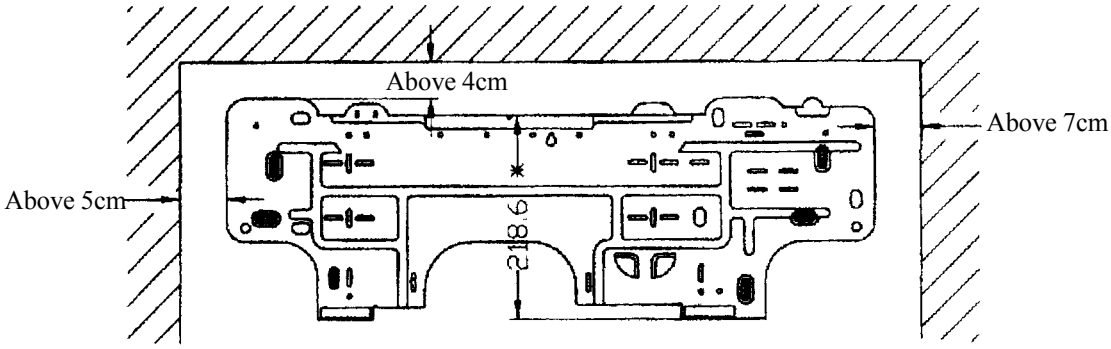

Wall-mounted fram

figure 7-5

7.5 Outlines and dimensions of outdoor unit

7.5.1 For 20 × 2, 25 × 2 Series

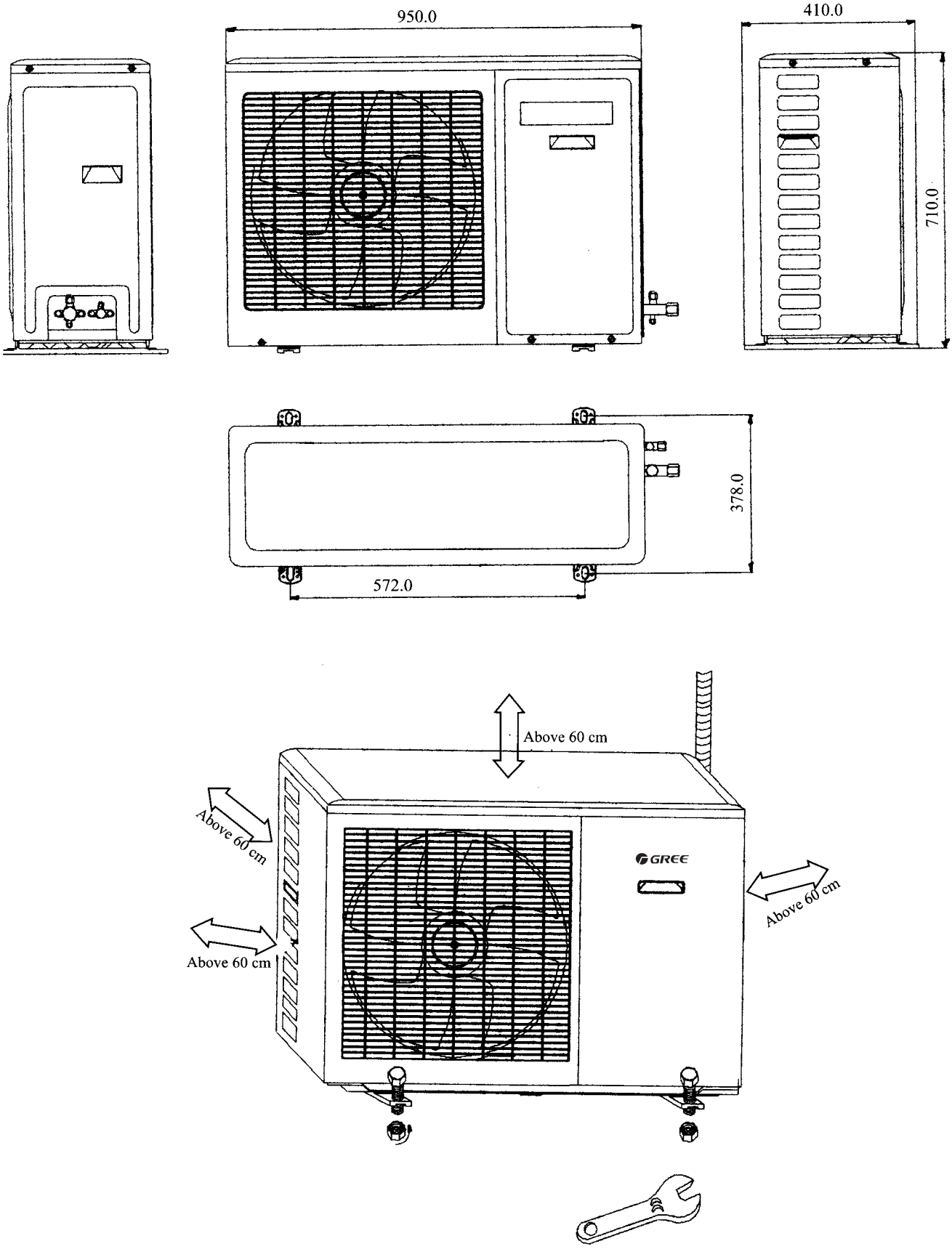

figure 7-6

7.5.2 For 32 × 2 Series

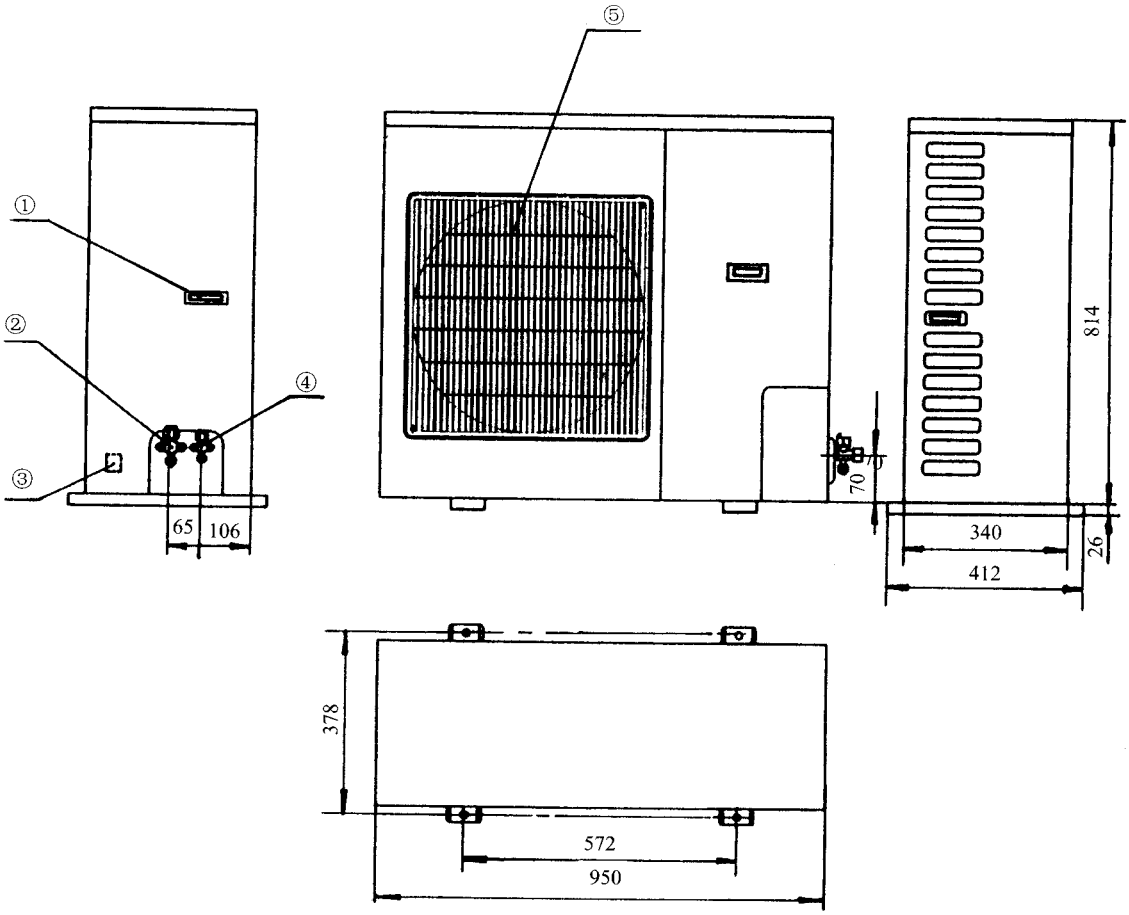

① Handle for moving ② Liguid valve assy. ③ Wire hole ④ Gas valve assy. ⑤ Front panel

figure 7-7

7.6 Explosive view of indoor unit

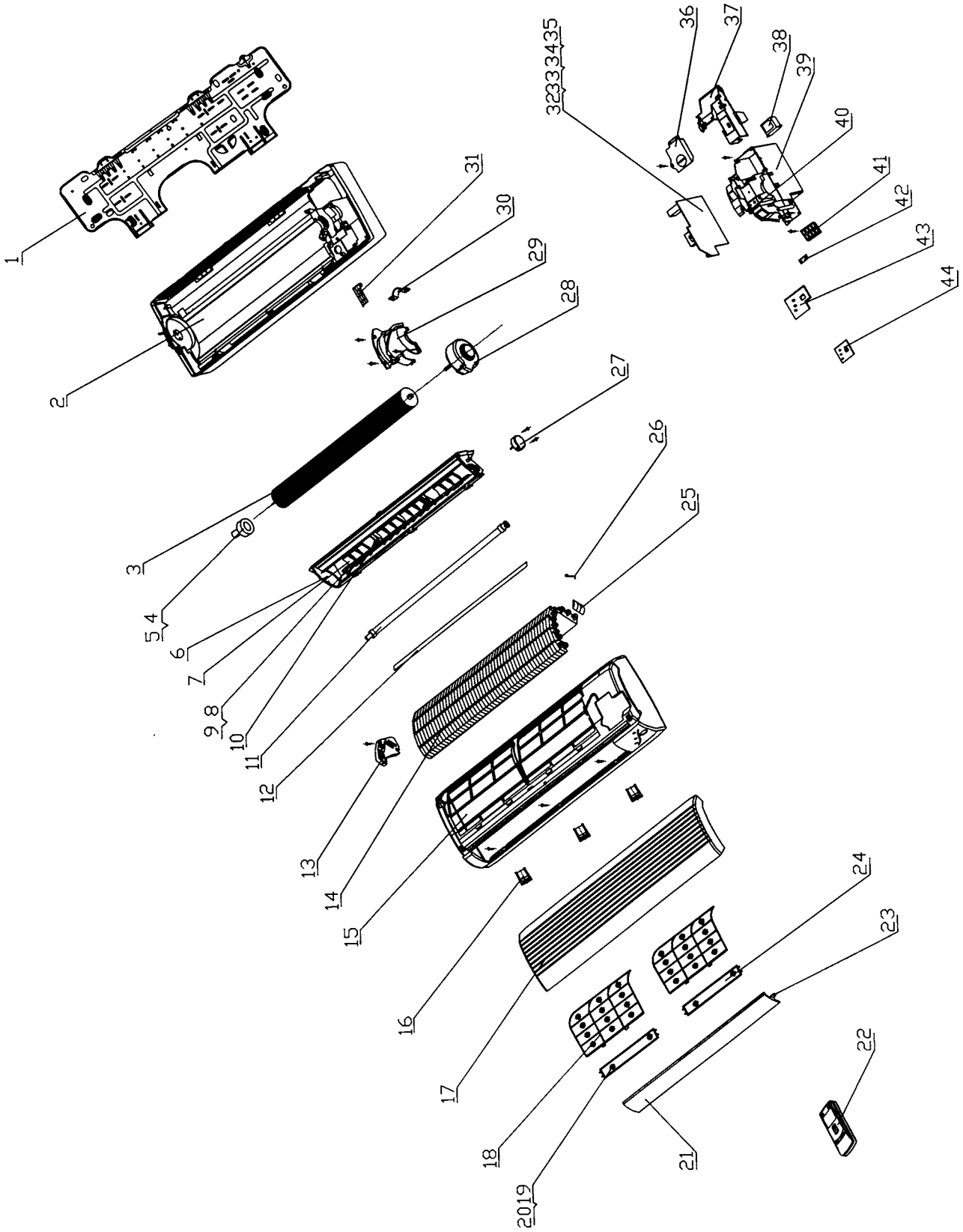

figure 7-8

7.7 Spare parts list of indoor unit

Table 7-8

No.	Description		Part No.						Qty
			KF-20x2G/NA12	KFR-20x2G/NA12	KF-25x2G/NA12	KFR-25x2G/NA12	KF-32x2G/NA12	KFR-32x2G/NA12	
1	Wall-Mounting Frame	壁挂板	01252438	01252438	01252438	01252438	01252438	01252438	1
2	Rear Case	底壳	22202001	22202001	22202001	22202001	22202001	22202001	1
3	Cross Flow Fan	贯流风叶	10352001	10352001	10352001	10352001	10352001	10352001	1
4	Fan Bearing	风扇轴承	76512210	76512210	76512210	76512210	76512210	76512210	1
5	Ring of Bearing	贯流风叶轴承胶圈	76512203	76512203	76512203	76512203	76512203	76512203	1
6	Water Tray	接水盘	20182001	20182001	20182001	20182001	20182001	20182001	1
7	Swing Louver	扫风叶片	10512002	10512002	10512002	10512002	10512002	10512002	12
8	Connecting Lever 1	扫风连杆 1	10582002	10582002	10582002	10582002	10582002	10582002	1
9	Connecting Lever 2	扫风连杆 2	10582003	10582003	10582003	10582003	10582003	10582003	1
10	Manual Lever	拔杆	10582001	10582001	10582001	10582001	10582001	10582001	2
11	Drainage Pipe	排水管	05232411	05232411	05232411	05232411	05232411	05232411	1
12	Evaporator Gate	蒸发器引水板	01094001	01094001	01094001	01094001	01094001	01094001	1
13	Evaporator Supporter	蒸发器角形架	24212001	24212001	24212001	24212001	24212001	24212001	1
14	Evaporator Assy	蒸发器部件	01002012	01002012	01002012	01002012	01002066	01002066	1
15	Front Case Assy	面板体部件	20002117	20002116	20002117	20002116	20002117	20002116	1
16	Screw Cover	螺钉盖	24252001	24252001	24252001	24252001	24252001	24252001	3
17	Front Panel	面板	20002001	20002001	20002001	20002001	20002001	20002001	1
18	Filter	过滤网	11122002	11122002	11122002	11122002	11122002	11122002	2
19	Air Cleaner holder	净化器支架	24222001	24222001	24222001	24222001	24222001	24222001	2
20	Air Cleaner A	净化器滤网 A	11012002	11012002	11012002	11012002	11012002	11012002	1
21	Guide Louver	导风板	10512001	10512001	10512001	10512001	10512001	10512001	1
22	Remote Controller	遥控器 Y512	30512505	30512505	30512505	30512505	30512505	30512505	1
23	Guide Louver Bearing	导风板轴套	10542011	10542011	10542011	10542011	10542011	10542011	3
24	Air Cleaner B	净化器滤网 B	11012003	11012003	11012003	11012003	11012003	11012003	1
25	Evaporator Pipe Cover	蒸发器接水槽	06122001	06122001	06122001	06122001	06122001	06122001	1
26	Sensor Insert	感温头插片 B	42020063	42020063	42020063	42020063	42020063	42020063	1
27	Stepping Motor MP24GA	步进电机 MP24GA	15212102	15212102	15212102	15212102	15212102	15212102	1
28	Motor FN8G	电机（配左右胶圈）							1
	Motor FN13B	电机（配左右胶圈）	15012037	15012037	15012038	15012038			1
	Motor FN14A	电机（配左右胶圈）					5012108	15012108	1
29	Motor Clamp	电机压板	26112014	26112014	26112014	26112014	26112014	26112014	1
30	Wire Clamp	电线夹	71010103	71010103	71010103	71010103	71010103	71010103	1
31	Pipe Clamp	连接管压板	24242001	24242001	24242001	24242001	24242001	24242001	1
32	PCB 5K512	控制器 5K512	30025507		30025507		30025507		1
	PCB 5K522	控制器 5K522		30025508		30025508		30025508	1
33	Tube Sensor	管温感温包	39000165	39000165	39000165	39000165	39000165	39000165	1
34	Room Sensor	室温感温包	39000164	39000164	39000164	39000164	39000164	39000164	1
35	Fuse 3.15A 250VAC	保险管	46010014	46010014	46010014	46010014	46010014	46010014	1
36	Electric Box Cover 2	电器盒顶盖 2	01412007	01412007	01412007	01412007	01412007	01412007	1
37	Electric Box Cover	电器盒顶盖	20102431	20102431	20102431	20102431	20102431	20102431	1
38	Transformer SC28B1	电源变压器 SC28B1	43110170	43110170	43110170	43110170	43110170	43110170	1
39	Electric Box	电器盒	20102001	20102001	20102001	20102001	20102001	20102001	1
40	Cable Clamp	压线槽	70482001	70482001	70482001	70482001	70482001	70482001	1
41	Terminal Board GT4B3A2	接线板 GT4B3A2	42010184	42010184	42010184	42010184	42010184	42010184	1
42	Wire Clip	压线片	42012415	42012415	42012415	42012415	42012415	42012415	1
43	LED Holder	指示灯架	24212005	24212005	24212005	24212005	24212005	24212005	1
44	LED Board	接收板	22432001	22432001	22432001	22432001	22432001	22432001	1
45	Connecting Cable	电源连接线	40020428	40020428	40020428	40020428	40020428	40020428	1
46	Signal Cable	信号控制线		40032150		40032150		40032150	1
47	Power Cord	电源线	40020262	40020262	40020262	40020262	40020262	40020262	1

The data are subject to change without notice.

Table 7-9

No.	Description		Part No.						Qty
			KF-20x2G/A12	KFR-20x2G/A12	KF-25x2G/A12	KFR-25x2G/A12	KF-32x2G/A12	KFR-32x2G/A12	
1	Wall-Mounting Frame	壁挂板	01252438	01252438	01252438	01252438	01252438	01252438	1
2	Rear Case	底壳	22202001	22202001	22202001	22202001	22202001	22202001	1
3	Cross Flow Fan	贯流风叶	10352001	10352001	10352001	10352001	10352001	10352001	1
4	Fan Bearing	风扇轴承	76512210	76512210	76512210	76512210	76512210	76512210	1
5	Ring of Bearing	贯流风叶轴承胶圈	76512203	76512203	76512203	76512203	76512203	76512203	1
6	Water Tray	接水盘	20182001	20182001	20182001	20182001	20182001	20182001	1
7	Swing Louver	扫风叶片	10512002	10512002	10512002	10512002	10512002	10512002	12
8	Connecting Lever 1	扫风连杆 1	10582002	10582002	10582002	10582002	10582002	10582002	1
9	Connecting Lever 2	扫风连杆 2	10582003	10582003	10582003	10582003	10582003	10582003	1
10	Manual Lever	拨杆	10582001	10582001	10582001	10582001	10582001	10582001	2
11	Drainage Pipe	排水管	05232411	05232411	05232411	05232411	05232411	05232411	1
12	Evaporator Gate	蒸发器引水板	01094001	01094001	01094001	01094001	01094001	01094001	1
13	Evaporator Supporter	蒸发器角形架	24212001	24212001	24212001	24212001	24212001	24212001	1
14	Evaporator Assy	蒸发器部件	01002012						1
	Evaporator Assy			01002042					1
	Evaporator Assy				01002042	01002042			1
	Evaporator Assy						01002050		1
	Evaporator Assy							01002033	1
15	Front Case Assy	面板体部件	20002111	20002111	20002114	20002111	20002114	20002111	1
16	Screw Cover	螺钉盖	24252001	24252001	24252001	24252001	24252001	24252001	3
17	Front Panel	面板	20002001	20002001	20002001	20002001	20002001	20002001	1
18	Filter	过滤网	11122002	11122002	11122002	11122002	11122002	11122002	2
19	Air Cleaner holder	净化器支架	24222001	24222001	24222001	24222001	24222001	24222001	2
20	Air Cleaner A	净化器滤网 A	11012002	11012002	11012002	11012002	11012002	11012002	1
21	Guide Louver	导风板	10512001	10512001	10512001	10512001	10512001	10512001	1
22	Remote Controller	遥控器 Y512	30512505	30512505	30512505	30512505	30512505	30512505	1
23	Guide Louver Bearing	导风板轴套	10542011	10542011	10542011	10542011	10542011	10542011	3
24	Air Cleaner B	净化器滤网 B	11012003	11012003	11012003	11012003	11012003	11012003	1
25	Evaporator Pipe Cover	蒸发器接水槽	06122001	06122001	06122001	06122001	06122001	06122001	1
26	Sensor Insert	感温头插片 B	42020063	42020063	42020063	42020063	42020063	42020063	1
27	Stepping Motor MP24GA	步进电机 MP24GA	15212102	15212102	15212102	15212102	15212102	15212102	1
28	Motor FN8G	电机（配左右胶圈）	15012037	15012037					1
	Motor FN13B				15012038	15012038			1
	Motor FN14A						15012108	15012108	1
29	Motor Clamp	电机压板	26112014	26112014	26112014	26112014	26112014	26112014	1
30	Wire Clamp	电线夹	71010103	71010103	71010103	71010103	71010103	71010103	1
31	Pipe Clamp	连接管压板	24242001	24242001	24242001	24242001	24242001	24242001	1
32	PCB 5K512	控制器 5K512	30025507		30025507		30025507		1
	PCB 5K522	控制器 5K522		30025508		30025508		30025508	1
33	Tube Sensor	管温感温包	39000165	39000165	39000165	39000165	39000165	39000165	1
34	Room Sensor	室温感温包	39000164	39000164	39000164	39000164	39000164	39000164	1
35	Fuse 3.15A 250VAC	保险管	46010014	46010014	46010014	46010014	46010014	46010014	1
36	Electric Box Cover 2	电器盒顶盖 2	01412007	01412007	01412007	01412007	01412007	01412007	1
37	Electric Box Cover	电器盒顶盖	20102431	20102431	20102431	20102431	20102431	20102431	1
38	Transformer SC28B1	电源变压器 SC28B1	43110170	43110170	43110170	43110170	43110170	43110170	1
39	Electric Box	电器盒	20102001	20102001	20102001	20102001	20102001	20102001	1
40	Cable Clamp	压线槽	70482001	70482001	70482001	70482001	70482001	70482001	1
41	Terminal Board GT4B3A2	接线板 GT4B3A2	42010184	42010184	42010184	42010184	42010184	42010184	1
42	Wire Clip	压线片	42012415	42012415	42012415	42012415	42012415	42012415	1
43	LED Holder	指示灯架	24212005	24212005	24212005	24212005	24212005	24212005	1

Table 7-9 continue

No.	Description		Part No.						Qty
			KF-20x2G/A12	KFR-20x2G/A12	KF-25x2G/A12	KFR-25x2G/A12	KF-32x2G/A12	KFR-32x2G/A12	
43	LED Holder	指示灯架	24212005	24212005	24212005	24212005	24212005	24212005	1
44	LED Board	接收板	22432001	22432001	22432001	22432001	22432001	22432001	1
45	Connecting Cable	电源连接线	40020428	40020428	40020428	40020428	40020428	40020428	1
46	Signal Cable	信号控制线		40032150		40032150		40032150	1
47	Power Cord	电源线	40020262	40020262	40020262	40020262	40020262	40020262	1

The data are subject to change without notice.

Table 7-10

No.	Description		Part No.			Qty
			GSW(9X2)-22 L/A(I)	GSW(9X2)-22 R/A(I)	GSW(7X2)-22 L/A(I)	
1	Wall-Mounting Frame	壁挂板	01252438	01252438	01252438	1
2	Rear Case	底壳	22202001	22202001	22202001	1
3	Cross Flow Fan	贯流风叶	10352001	10352001	10352001	1
4	Fan Bearing	风扇轴承	76512210	76512210	76512210	1
5	Ring of Bearing	贯流风叶轴承胶圈	76512203	76512203	76512203	1
6	Water Tray Assy	接水盘组件	20182012	20182012	20182012	1
7	Swing Louver	扫风叶片	10512002	10512002	10512002	12
8	Connecting Lever 1	扫风连杆 1	10582002	10582002	10582002	1
9	Connecting Lever 2	扫风连杆 2	10582003	10582003	10582003	1
10	Manual Lever	拔杆	10582001	10582001	10582001	2
11	Drainage Pipe	排水管	05232411	05232411	05232411	1
12	Evaporator Gate	蒸发器引水板	01094001	01094001	01094001	1
13	Evaporator Supporter	蒸发器角形架	24212001	24212001	24212001	1
14	Evaporator Assy	蒸发器部件	01002015	01002007		1
15	Front Case Assy	面板体部件	20002111	20002111	20002111	1
16	Screw Cover	螺钉盖	24252001	24252001	24252001	3
17	Front Panel	面板	20002002	20002002	20002002	1
18	Filter	过滤网	11122002	11122002	11122002	2
19	Air Cleaner holder	净化器支架	24222001	24222001	24222001	2
20	Air Cleaner A	净化器滤网 A	11012002	11012002	11012002	1
21	Guide Louver	导风板	10512001	10512001	10512001	1
22	Remote Controller	遥控器 Y512	30512505	30512505	30512505	1
23	Guide Louver Bearing	导风板轴套	10542011	10542011	10542011	3
24	Air Cleaner B	净化器滤网 B	11012003	11012003	11012003	1
25	Evaporator Pipe Cover	蒸发器接水槽	06122001	06122001	06122001	1
26	Sensor Insert	感温头插片 B	42020063	42020063	42020063	1
27	Stepping Motor MP24GA	步进电机 MP24GA	15212102	15212102	15212102	1
28	Motor FN20B-PG	电机(配左右胶圈)	15012035	15012035	15012035	1
29	Motor Clamp	电机压板	26112014	26112014	26112014	1
30	Wire Clamp	电线夹	71010103	71010103	71010103	1
31	Pipe Clamp	连接管压板	24242001	24242001	24242001	1
32	PCB 5C51F0A	控制器 5C51F0A	30025203		30025203	1
	PCB 5C52F0A	控制器 5C52F0A		30025296		1
33	Tube Sensor	管温感温包	39000116	39000159	39000116	1
34	Room Sensor	室温感温包	39000155	39000155	39000155	1
35	Fuse 3.15A 250VAC	保险管	46010014	46010014	46010014	1
36	Electric Box Cover 2	电器盒顶盖 2	01412007	01412007	01412007	1
37	Electric Box Cover 1	电器盒顶盖 1	01412014	01412014	01412014	1
38	Transformer SC28B1	电源变压器 SC28B1	43110170	43110170	43110170	1
39	Electric Box	电器盒	20102001	20102001	20102001	1
40	Cable Clamp	压线槽	70482001	70482001	70482001	1
41	Terminal Board GT4B3AZ	接线板 GT4B3AZ	42010184	42010184		1
	Terminal Board T4B3A	接线板 T4B3A			42011233	1
42	Wire Clip	压线片	42012415	42012415	42012415	1
43	LED Holder	指示灯架	24212005	24212005	24212005	1
44	LED Board	接收板	30046019	30046019	30046019	1
45	Connecting Cable	电源连接线	40020438	40020438	40020413	1
46	Signal Cable	信号控制线		40032119		1
47	Power cord	电源线	40020262	40020262		1

The data are subject to change without notice.

7.8 Explosive view of outdoor unit

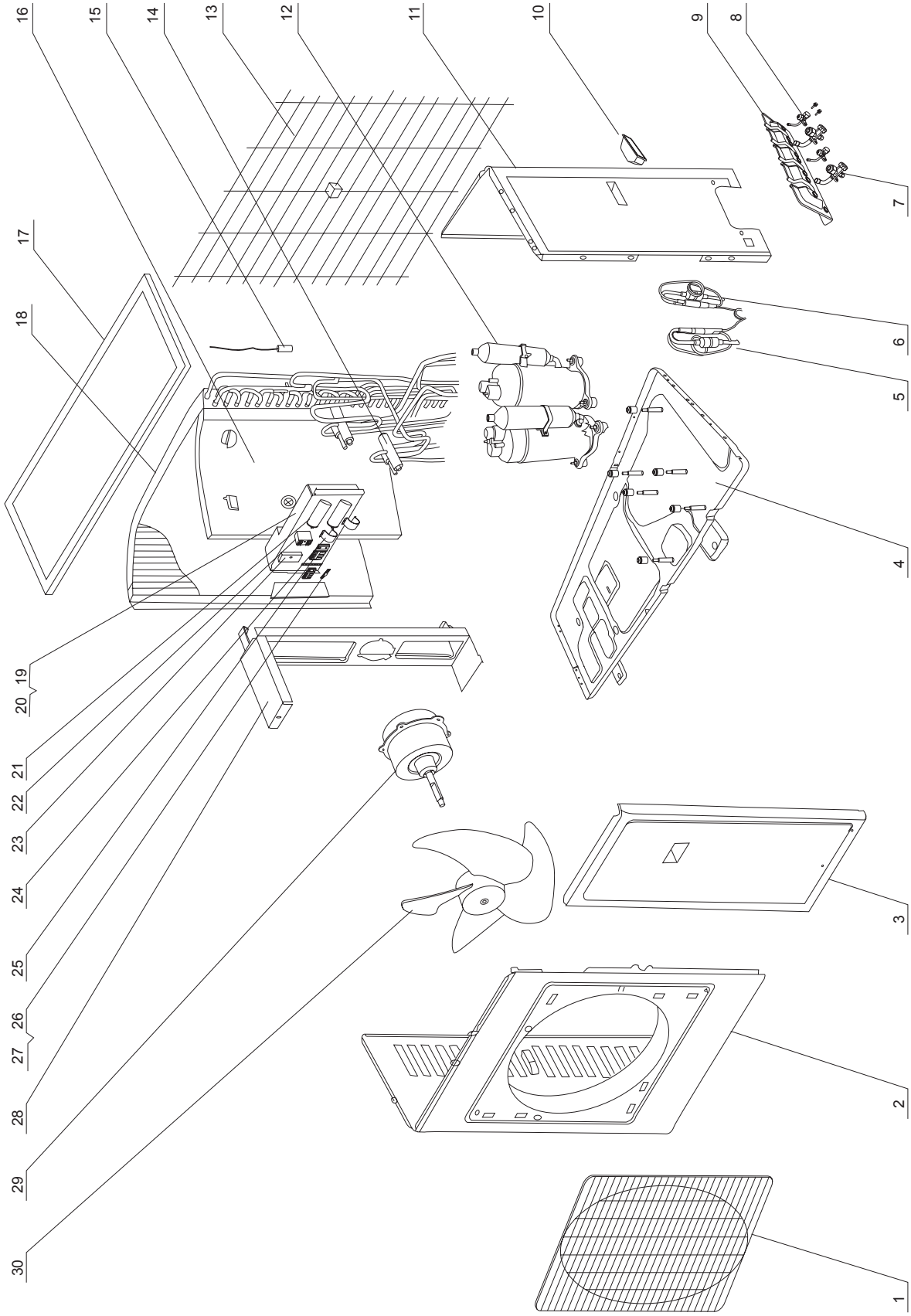

figure 7-9

7.9 Spare parts list of outdoor unit

Table 7-11

No.	Description		Part No.				Part No.		Qty
			KF-20x2W/NA12	KFR-20x2W/NA12	KF-25x2W/NA12	KFR-25x2W/NA12	KF-32x2W/NA12	KFR-32x2W/NA12	
1	Front Grill	面罩组件	22265251	22265251	22265251	22265251	22265251	22265251	1
2	Front Plate	外罩	01433028	01433028	01433028	01433028	01435254	01435254	1
3	Front Side plate	前侧板	01303023	01303023	01303023	01303023	01305247	01305247	1
4	Metal Base	底盘组件	01203270	01203270	01203016	01203016	01203013	01203013	1
5	Capillary Assy	毛细管组件Ⅰ	03003119	03003157	03003076	03003104	03003173	03003168	1
6	Capillary Assy	毛细管组件Ⅱ	03003120	03003158	03003404	03003105	03003153	03003169	1
7	Valve 3/8”	阀门3/8”	07100018	07100018	07100018	07100018	\	\	2
	Valve 1/2”	阀门1/2”	\	\	\	\	07100113	07100113	2
8	Valve 1/4”	阀门1/4”	07100013	07100017	07100017	07100017	07100013	07100017	2
9	Valve Support	阀门支架	01713028	01713028	01713028	01713028	01713028	01713028	1
10	Handle	把手	26235252	26235252	26235252	26235252	26235252	26235252	2
11	Rear Side Plate	后侧板	01303021	01303021	01303021	01303021	01303004	01303004	1
12	Compressor SG433EB2	压缩机及配件	00100123	00100123	\	\	\	\	2
	Compressor RH174VHAC	压缩机及配件	\	\	00120078	00120078	\	\	2
	Compressor C-RV232BH1AA	压缩机及配件	\	\	\	\	00100339	00100339	2
13	Rear Grill Assy	网罩组件	01473024	01473024	01473024	01473024	01475251	01475251	1
14	4-way Valve	四通阀	\	43000312	\	43000312	\	43000312	2
15	Tube Sensor	室外管温感温头	\	39000009	\	39000009	\	39000009	1
16	Isolation Sheet Assy	中间隔板组件	01233022	01233022	01233022	01233022	01235253	01235253	1
17	Top cover Assy	顶盖组件	01255260	01255260	01255260	01255260	01255260	01255260	1
18	Condenser Assy	冷凝器组件	01103349	01103019	01103349	01103109	01103045	01103122	1
19	Electric Box	电器盒	01413042	01413042	01413042	01413042	01413042	01413042	1
20	Electric box cover	电器盒盖板	01413047	01413047	01413047	01413047	01413047	01413047	1
21	Capacitor 30μF	电容30μF/450V	33000021	33000021	\	\	33000021	33000021	2
	Capacitor 25μF	电容25μF/450V	\	\	33000020	33000020	\	\	2
22	Capacitor 3μF	电容3μF/450V	33010027	33010027	33010027	33010027	33010027	33010027	1
23	Dual Defrost Board	一拖二化霜板	\	30112003	\	30112003	\	30112003	1
	Velometer	调速器	30024413	\	30024413	\	30024413	\	1
24	Capacitor Clamp	电容夹	02143401	02143401	02140001	02140001	02143401	02143401	2
25	Terminal Board	三位接线板A	42011113	42011113	42011113	42011113	42011113	42011113	2
26	Insulation Gasket D	绝缘垫片D	70410525	70410525	70410525	70410525	70410525	70410525	2
27	Earthing Plate	接地铜板	42010202	42010202	42010202	42010202	42010202	42010202	1
28	Motor Support	电机支架	01703027	01703027	01703027	01703027	01705253	01705253	1
29	Motor FW38A	电机 FW38A	15013032	\	15013032	\	\	\	1
	Motor FW60J	电机 FW60J	\	15013038	\	15013038	15013038	15013038	1
30	Axial Flow Fan	轴流风叶	10335253	10335253	10335253	10335253	10335253	10335253	1

The data are subject to change without notice.

Table 7-12

No.	Description		Part No.						Qty
			KF-20x2W/A12	KFR-20x2W/A12	KF-25x2W/A12	KFR-25x2W/A12	KF-32x2W/A12	KFR-32x2W/A12	
1	Front Grill	面罩组件	22265251	22265251	22265251	22265251	22265251	22265251	1
2	Front Plate	外罩	01433028	01433028	01433028	01433028	01435254	01435254	1
3	Front Side plate	前侧板	01303023	01303023	01303023	01303023	01305247	01305247	1
4	Metal Base	底盘组件	01203270	01203270	01203016	01203016	01203013	01203013	1
5	Capillary Assy	毛细管组件Ⅰ	03003119	03003157	03003076	03003104	03003173	03003168	1
6	Capillary Assy	毛细管组件Ⅱ	03003120	03003158	03003404	03003105	03003153	03003169	1
7	Valve 3/8”	阀门3/8”	07100018	07100018	07100018	07100018	\	\	2
	Valve 1/2”	阀门1/2”	\	\	\	\	07100113	07100113	2
8	Valve 1/4”	阀门1/4”	07100013	07100017	07100017	07100017	07100013	07100017	2
9	Valve Support	阀门支架	01713028	01713028	01713028	01713028	01713028	01713028	1
10	Handle	把手	26235252	26235252	26235252	26235252	26235252	26235252	2
11	Rear Side Plate	后侧板	01303021	01303021	01303021	01303021	01303004	01303004	1
12	Compressor SG433EB2	压缩机及配件	00100123	00100123	\	\	\	\	2
	Compressor RH174VHAC	压缩机及配件	\	\	00120078	00120078	\	\	2
	Compressor C-RV232BH1AA	压缩机及配件	\	\	\	\	00100339	00100339	2
13	Rear Grill Assy	网罩组件	01473024	01473024	01473024	01473024	01475251	01475251	1
14	4-way Valve	四通阀	\	43000312	\	43000312	\	43000312	2
15	Tube Sensor	室外管温感温头	\	39000009	\	39000009	\	39000009	1
16	Isolation Sheet Assy	中间隔板组件	01233022	01233022	01233022	01233022	01235253	01235253	1
17	Top cover Assy	顶盖组件	01255260	01255260	01255260	01255260	01255260	01255260	1
18	Condenser Assy	冷凝器组件	01103349	01103019	01103349	01103109	01103045	01103122	1
19	Electric Box	电器盒	01413042	01413042	01413042	01413042	01413042	01413042	1
20	Electric box cover	电器盒盖板	01413047	01413047	01413047	01413047	01413047	01413047	1
21	Capacitor 30μF	电容30μF/450V	33000021	33000021	\	\	33000021	33000021	2
	Capacitor 25μF	电容25μF/450V	\	\	33000020	33000020	\	\	2
22	Capacitor 3μF	电容3μF/450V	33010027	33010027	33010027	33010027	33010027	33010027	1
23	Dual Defrost Board	一拖二化霜板	\	30112003	\	30112003	\	30112003	1
	Velometer	调速器	30024413	\	30024413	\	30024413	\	1
24	Capacitor Clamp	电容夹	02143401	02143401	02140001	02140001	02143401	02143401	2
25	Terminal Board	三位接线板A	42011113	42011113	42011113	42011113	42011113	42011113	2
26	Insulation Gasket D	绝缘垫片D	70410525	70410525	70410525	70410525	70410525	70410525	2
27	Earthing Plate	接地铜板	42010202	42010202	42010202	42010202	42010202	42010202	1
28	Motor Support	电机支架	01703027	01703027	01703027	01703027	01705253	01705253	1
29	Motor FW38A	电机 FW38A	15013032	\	15013032	\	\	\	1
	Motor FW60J	电机 FW60J	\	15013038	\	15013038	15013038	15013038	1
30	Axial Flow Fan	轴流风叶	10335253	10335253	10335253	10335253	10335253	10335253	1

The data are subject to change without notice.

Table 7-13

No.	Description		Part No.		Qty
			GSW(9x2)-22L/A(O)	GSW(9x2)-22R/A(O)	
1	Front Grill	面罩组件	22265251	22265251	1
2	Front Plate	外罩	01433028	01433030	1
3	Front Side plate	前侧板	01303023	01303023	1
4	Metal Base	底盘组件	01203013	01203013	1
5	Capillary Assy	毛细管组件Ⅰ	03003102	03003060	1
6	Capillary Assy	毛细管组件Ⅱ	03003153	03003075	1
7	Valve 3/8”	阀门3/8”	07100018	07100018	2
8	Valve 1/4”	阀门1/4"	07100013	07100013	2
9	Valve Support	阀门支架	01713028	01713028	1
10	Handle	把手	26235252	26235252	2
11	Rear Side Plate	后侧板	01303021	01303021	1
12	Compressor 2P14S236A1J	压缩机及配件	00100253	\	2
12	Compressor 2P15S236A1H	压缩机及配件	\	00100263	2
13	Rear Grill Assy	网罩组件	01473024	01473024	1
14	4 way Valve	四通阀	\	43000312	2
15	Sensor	室外感温头 EHP-2Y	\	39000009	1
16	Isolation Sheet Assy	中间隔板组件	01233022	01233022	1
17	Top Cover Assy	顶盖组件	01255260	01255260	1
18	Condenser Assy	冷凝器组件	01103349	01103019	1
19	Electric box	电器盒	01413042	0 1413004	1
20	Electric box cover	电器盒盖板	01413047	01413047	1
21	Capacitor 30 μF/450V	电容 30 μF/450V	33000018	\	2
	Capacitor 35 μF/450V	电容 35 μF/450V	\	33000027	2
22	Capacitor 3 μF/450V	电容 3 μF/450V	33010021	\	1
	Capacitor 3.5 μF/450V	电容 3.5 μF/450V	\	33010010	1
23	Dual Defrost Board	一拖二化霜板	\	30112003	1
	Velometer	调速器	30024413	\	1
24	Capacitor clamp	电容夹	02143411	0 2143410	2
25	Terminal Board	三位接线板 A	42011113	42011113	2
26	Insulation Gasket D	绝缘垫片 D	70410525	70410525	2
27	Earthing Plate	接地铜板	42010202	42010202	1
28	Motor Support	电机支架	01703027	01703027	1
29	Motor	电机FW38P	15013030	\	1
	Motor	电机FW80A	\	15013037	1
30	Axial Flow Fan	轴流风叶	10335253	10335253	1

The data are subject to change without notice.

7.10 Circuit diagram

These circuit diagrams are subject to change without notice.
Please refer to the ones stuck on the machines.

KFR-32 × 2GW/NA12 KFR-25 × 2GW/NA12 KFR-20 × 2GW/NA12

KFR-32 × 2GW/A12 KFR-20 × 2GW/A12

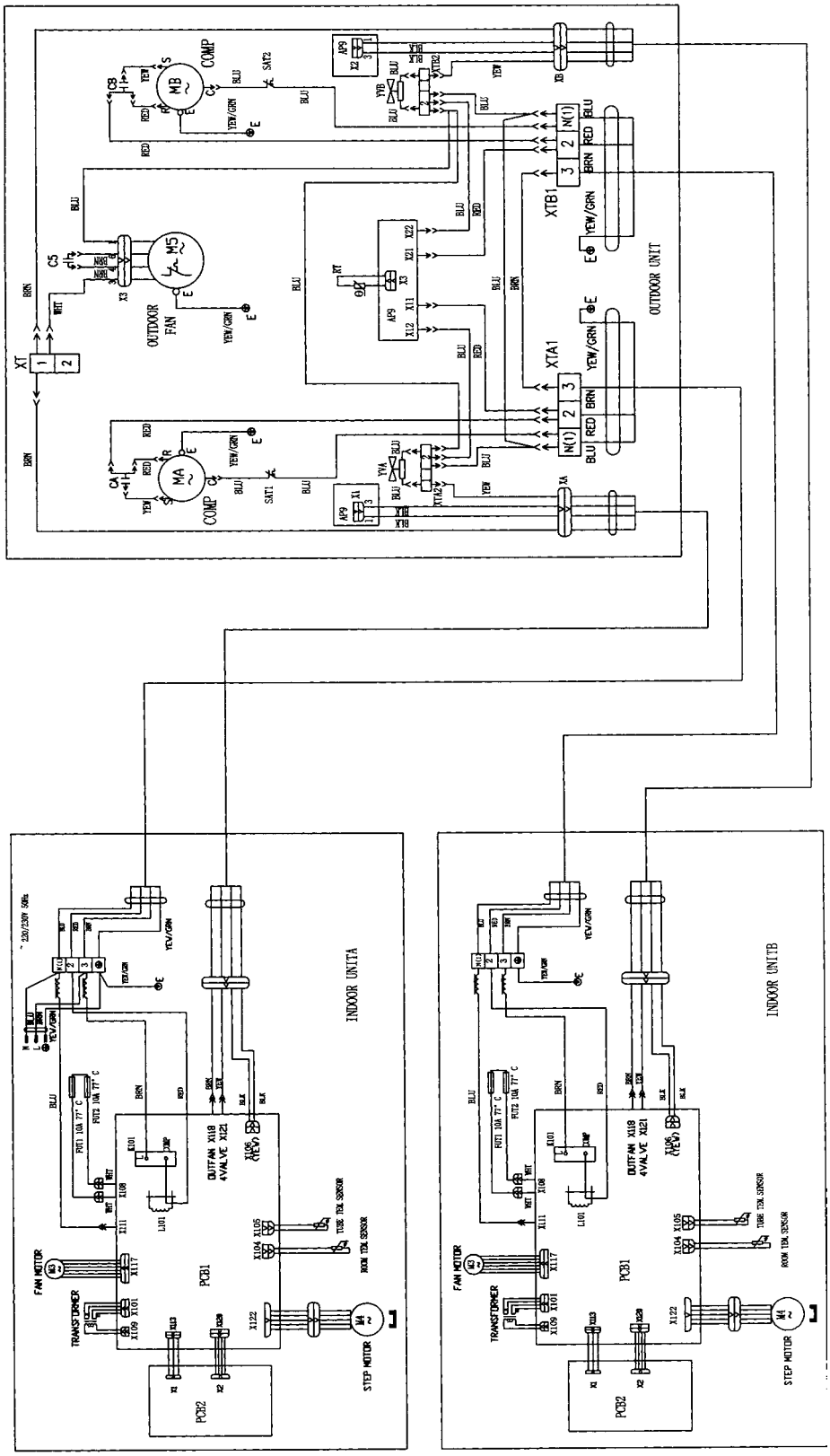

figure 7-10

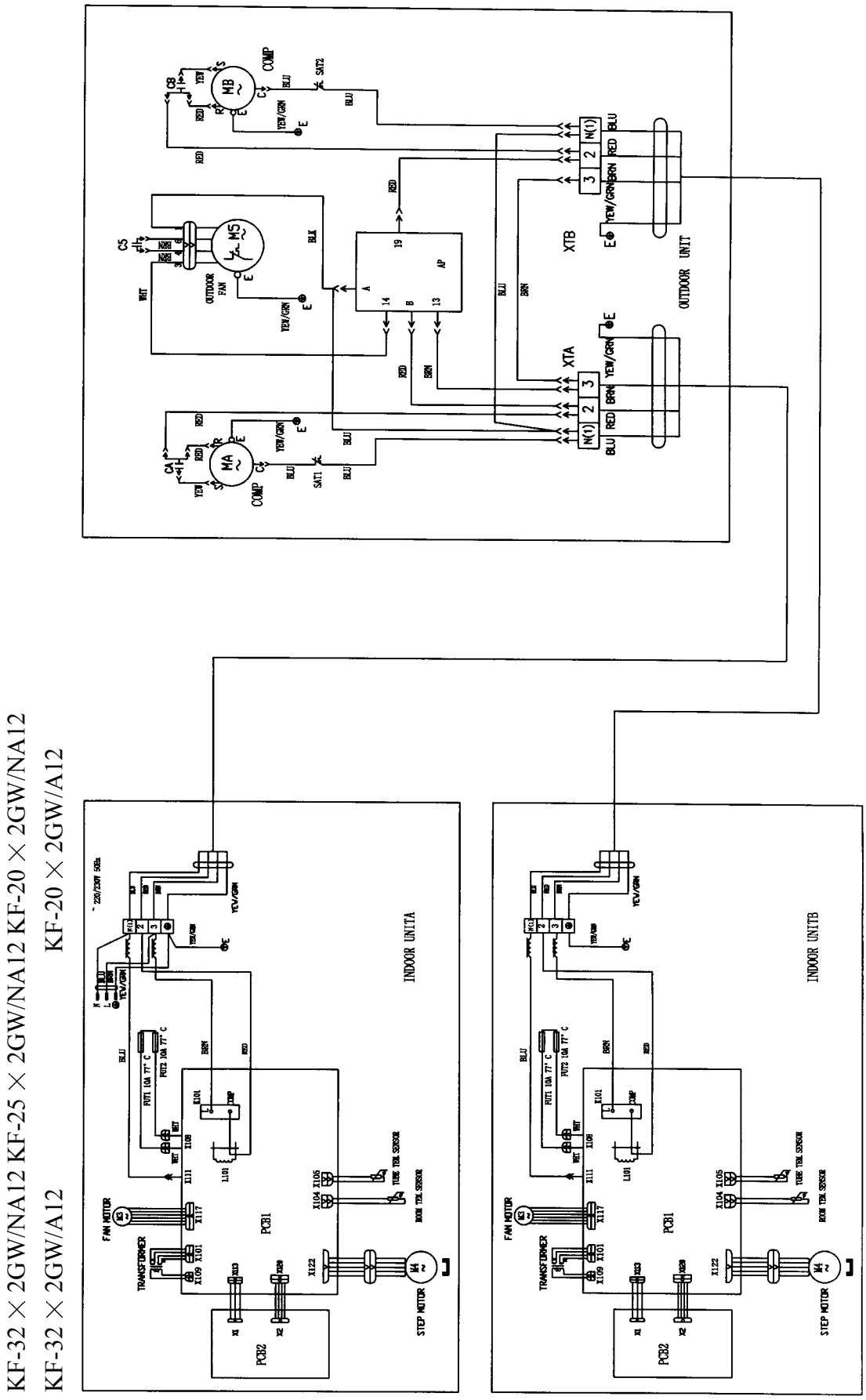
KF-32 × 2GW/NA12 KF-25 × 2GW/NA12 KF-20 × 2GW/NA12
KF-32 × 2GW/A12
KF-20 × 2GW/A12
INDOOR UNITA
INDOOR UNITB
OUTDOOR UNIT
COMP
XTA
XTB
FAN MOTOR
TRANSFORMER
STEP MOTOR
PCB1
PCB2

figure 7-11

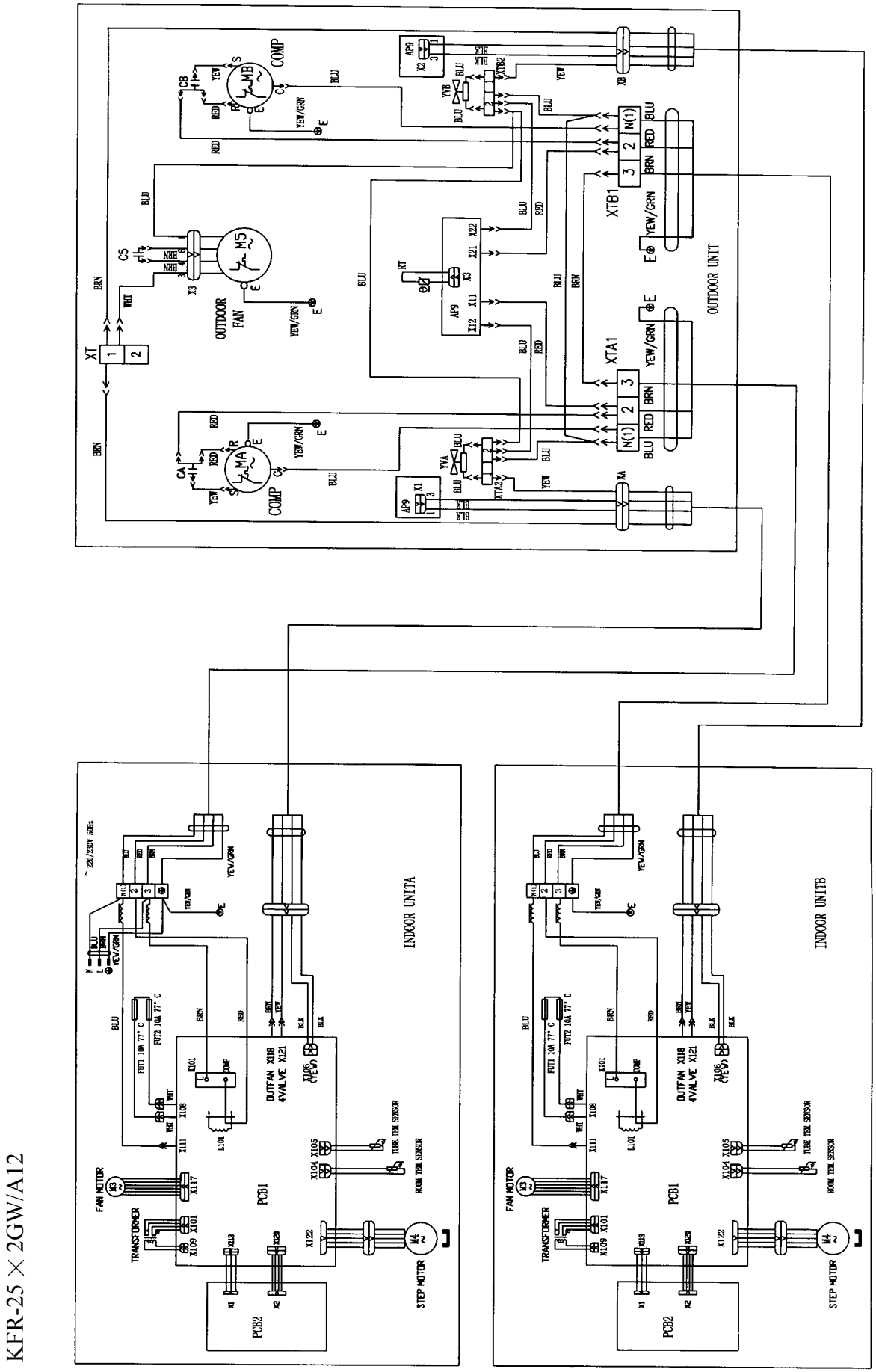

KFR-25 × 2GW/A12

figure 7-12

KF-25 × 2GW/A12

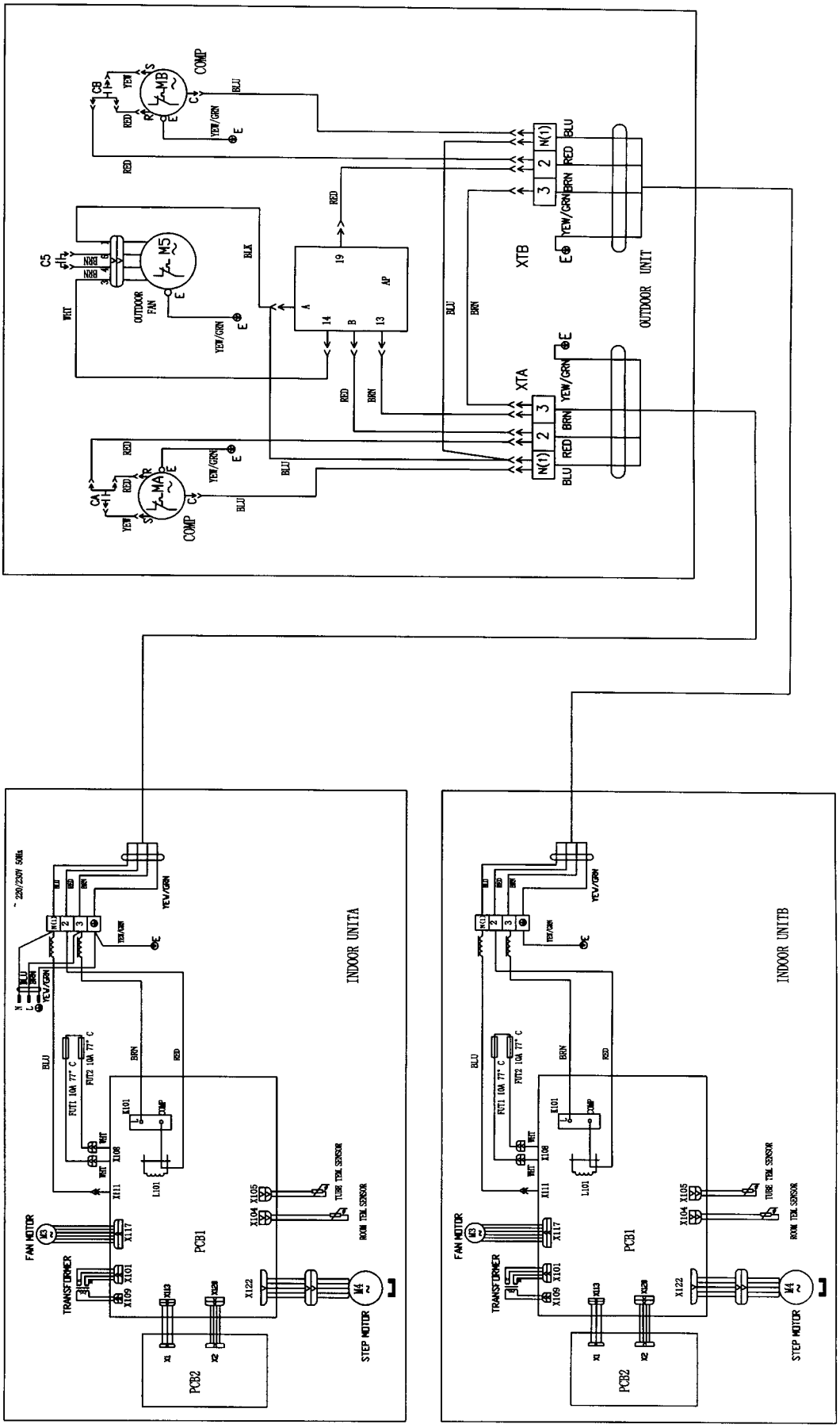

figure 7-13

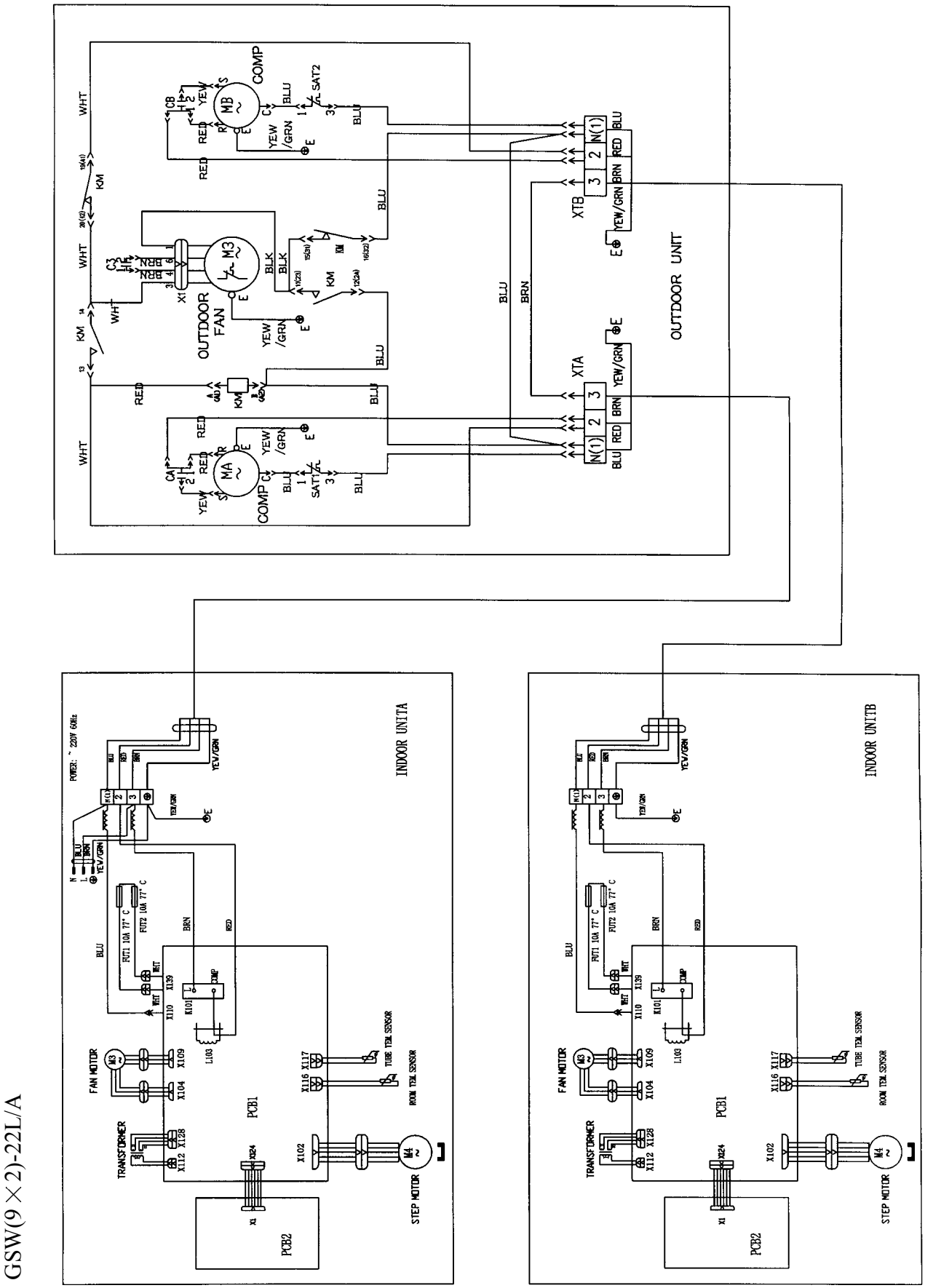

GSW(9×2)-22L/A

figure 7-14

GSW(9×2)-22R/A

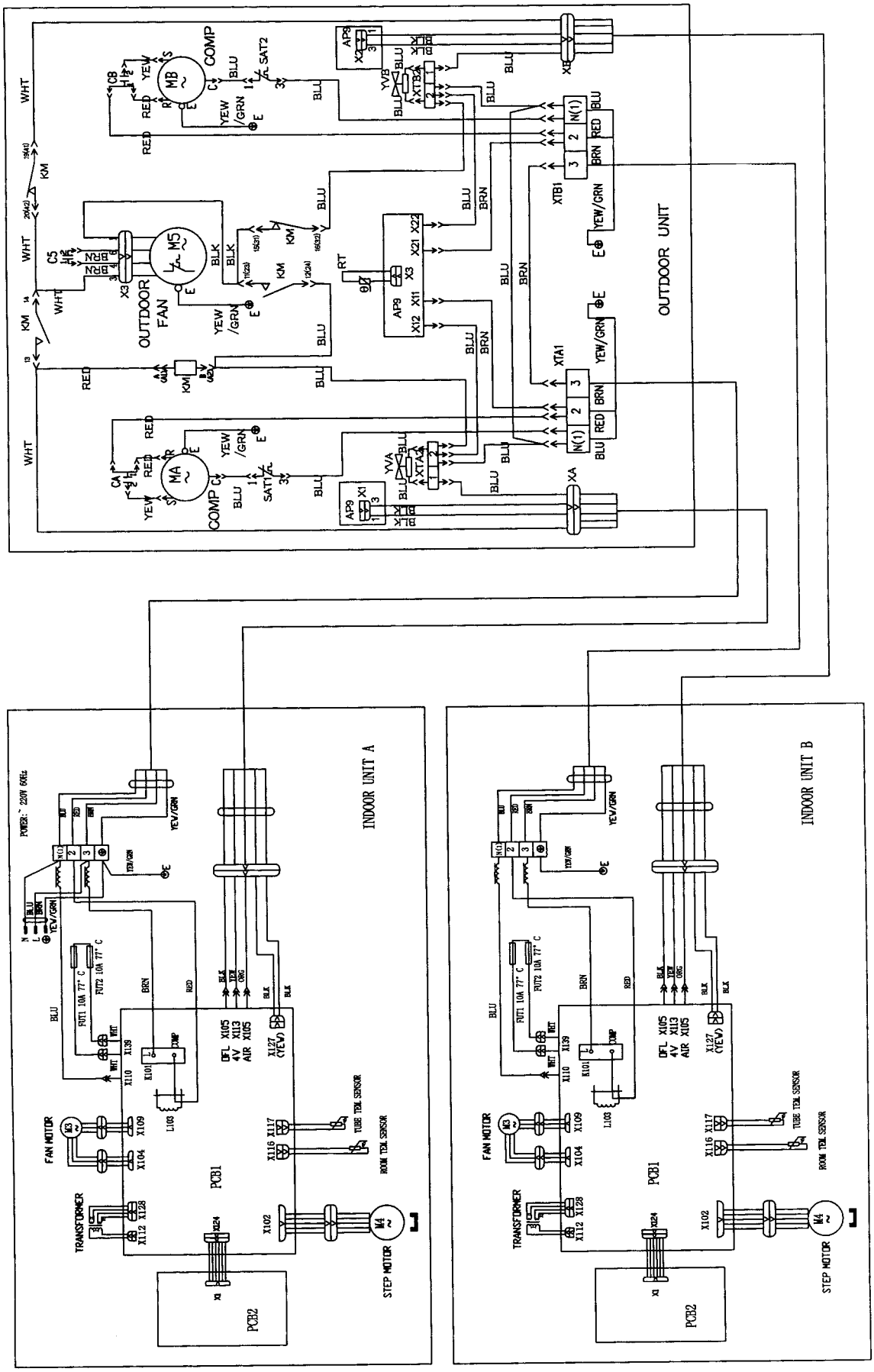

figure 7-15

7.11 PCB function manual

5 In 1 PCB Function manual
(For 60Hz model)

A. running mode

1. cooling 2.dehumidifying 3.heating 4.fan 5.auto

B. input parameters

1. indoor ambient temp. T_{in}
2. evaporator tube temp. T_{eva}
3. setting temp. T_{set}
4. condenser tube temp. T_{con}
5. outdoor ambient temp. T_{out}

C. targets

1. indoor motor (PG motor)
2. swing motor
3. outdoor motor (two speeds motor)
4. compressor
5. four-way reversing valve
6. electric heater
7. fresh motor
8. air cleaner

D. fundamental functions

1. cooling mode

(1) the running conditions and control measures

a. if $T_{in} \geqslant T_{set}$ + 1℃, the machine runs at the cooling mode. Compressor runs, outdoor motor runs at low speed , indoor fan runs at the set fan speed.

b. if $T_{in} \leqslant T_{set}$ -1℃, the machine stops. Compressor stops first , outdoor motor stops after 15 seconds , indoor motor runs at the set fan speed.

c. if T_{set} -1℃ $< T_{in} <$ T_{set} +1℃,keep the previous state.

(2) in this mode, the reversing valve is inactive, the temp. setting range is from 16~30℃.

(3) Protect function

a. anti-freezing function.

if compressor have run 6 minutes , and detect T_{eva}< 0℃ for continuous 3 minutes, then the compressor , outdoor fan stopped , indoor fan run at the set fan speed. After 3 minutes later, it will run at the original state if $T_{eva} \geqslant$ 10℃.

b. compressor protection

Compressor's starting interval should be more than 3 minutes no matter in whatever modes and conditions. If it's plugged in first time, the compressor does not have 3 minutes delay. When compressor is started, it will not stop within 5 minutes unless it is plugged out.

c. overload protection

If it detect the system current surpass the designed 13 A for continuous 3 minutes, the machine go into fan mode, when 3 minutes passed and it detect the current no more than 13 A, it will back to original state. If it detects overloading states for 3 consecutive times within 30 minutes, the machine stops, and must be restarted by remote controller.

d. locked motor protection

if it detects no feedback from the PG motor for continuous 15 seconds , the machine stops, after 3 minutes delay, the machine backs to original state. If the motor be detected locked for 3 consecutive times, the whole machine stops and can not run again automatically.

2. dehumidifying mode

(1) the working conditions and control measures

a. if $T_{in} > T_{set}+2℃$, it is in cooling running, the indoor motor speed can be selected ,and outdoor motor run at low speed.

b. If $T_{set}-2℃ \leqslant T_{in} \leqslant T_{set}+2℃$,it goes into dehumidifying running ,the indoor motor run at the low speed, 6 minutes later the compressor stops, another 15 seconds later the outdoor fan stops and another 30 seconds later, the indoor motor stops, 3 and a half minutes later, compressor and outdoor fan run again ,indoor motor runs at the low speed, then the machine cycle the above procedures repeatedly. outdoor motor runs at the low speed.

c. If $T_{in} < T_{set}-2℃$, compressor ,outdoor motor and indoor motor stop.

(2) in this mode, the reversing valve is inactive , the temp. setting range is 16~30℃.

(3) Anti-freezing protection.

If $T_{indoor} > T_{set} + 2℃$, it goes into cooling running , anti-freezing function is same with cooling mode, but the compressor must stops for 4 minutes. when it goes into dehumidifying mode, compressor runs 6 minutes , if it detects $T_{eva} < 0℃$,compressor and outdoor motor stop, indoor motor runs at low speed ,after 3 minutes delay ,and $T_{eva} \geqslant 10℃$,it will be back to its original state.

(4) Overload is same as the one in cooling mode.

3. heating mode

(1) the working conditions and control measures

a. If $T_{in} \leqslant T_{set}+2℃$, it goes into heating mode, reversing valve, compressor and outdoor motor all work in the same time, indoor fan will run at the same procedures with anti cool air function.

b. If $T_{in} \geqslant T_{set} + 4℃$, compressor stops first, 15 seconds late, outdoor motor stops ,but reversing valve keeps working, indoor motor run at the procedures of blowing surplus heat.

d. if $T_{set} + 2℃ < T_{indoor} < T_{set} +4℃$, keep the previous running state.

e. If $T_{outdoor} \leqslant 3℃$, outdoor runs at high speed, if $T_{outdoor} \geqslant 5℃$,outdoor motor runs at low speed .if $3℃ \leqslant T_{outdoor} \leqslant 5℃$,keep the previous running state.

(2) in this mode, the temperature setting range is from 16~30℃.

(3) The working conditions of auxiliary electric heater.

In heating mode, when compressor is working, indoor motor runs at high speed and middle speed . if it detect T_{eva}<50℃ for continuous 8 seconds and T_{indoor} ≤25℃, electric heater will work ,if compressor stop or indoor motor runs at low speed or T_{eva} ≥ 54℃or T_{indoor} ≥ 28℃ or 10 seconds before defrosting , the electric heater will stop.

(4) protections

a .anti cool air

when the machine starts heating and T_{eva} ≥ 22℃, indoor motor runs at low speed, and swing motor makes the louver at the horizontal position(in Bird line, it will swing to the maximum air volume position), if T_{eva}≥ 40℃ or compressor have run 2 minutes ,indoor motor and swing motor will run at the set speed .

b .anti high temp.

in heating mode, if it detect T_{eva} ≥ 56℃(58℃ can be selected), outdoor motor will stop(in this period it will not detect the defrosting temp.). if T_{eva}≤52℃, outdoor motor will be back running (it will not detect defrosting temp. in the first 5 seconds).

c. blowing surplus heat

In heating mode, when set temp is reached ,comp. stops first,15 seconds later outdoor fan stops, Indoor motor blows 90 seconds (60 seconds can be selected) at low speed ,swing motor makes the louver at the horizontal position(in Bird line,it will swing to the maximum air volume postion).

d. Compressor's protection is same with the one in cooling mode.

e. Overload protection

If it detects that the system current surpassed the designed 13 A for continuous 3 seconds, compressor, electric heater and outdoor motor stop , indoor motor runs the same procedures as the blowing surplus heat condition. After 3 minutes and current no more than 13 A, the machine will be back to its original state, indoor motor runs as the anti cool air condition. If it detects overloading state for 3 consecutive times within 30 minutes, the machine stops, and it must be restarted by remote controller.

f. locked motor protection

if it detects no feedback from the PG motor for continuous 15 seconds , compressor , outdoor motor, indoor motor and electric heater will stop, 3 minutes late, the machine will be back to its original state, indoor motor runs as the anti cool air condition. If the motor was locked for 3 consecutive times, the whole machine stops and can not run again automatically.

g. defrosting conditions and procedures

In heating mode, if compressor has run 44 minutes (in its first 6 minutes it will not detect defrosting temp.) , and it has detected T_{con}≤-4℃ for continuous 1 minutes , it begins to defrost , electric heater will stop for 10 seconds (even if electric heater is not working) , then indoor motor stops , reversing valve becomes inactive in another 2 seconds, another 2 seconds later, outdoor motor stops, when T_{con}≥ 10℃or defrosting lasts for 10 minutes , outdoor motor and reversing valve

becomes active , indoor motor will run as the anti cool air condition, then it cycles again, recalculates the compressor's running time again. (In this period , if any protection works ,and after the machine is back to work , it will re-start defrosting state. it will not detect outdoor tube temp when compressor's in its first 6 minutes running)

h.noise lowering protection

When you use RUN/STOP button to switch off the machine, reversing valve will become inactive in 2 minutes.

4. AUTO mode

(1) in AUTO mode, standard cooling T_{set}=25℃, standard heating T_{set}=20℃

(2) working procedures

a. If $T_{indoor} \geqslant T_{set}$ + 1℃, select cooling mode, from this time, the set temp. is 25℃. If $T_{indoor} \leqslant T_{set}$-1℃, compressor and outdoor motor stop, indoor motor runs at the set speed, if T_{set}-1℃< T_{indoor} < T_{set} +1℃, keep the original state.

b. If $T_{indoor} \leqslant T_{set}$+2℃, select heating mode, from this time, the set temp. is 20℃, if $T_{indoor} \geqslant T_{set}$ + 4℃, compressor stops first, outdoor motor stops 15 seconds later , reversing valve is always active, indoor motor runs as the blowing surplus heat condition. If T_{set} +2℃< T_{indoor} < T_{set} +4℃, keeps the original state.

Cooling & heating AUTO mode: in AUTO mode, when the machine is switched from heating mode to the other modes, reversing valve becomes inactive in 90 seconds.

Cooling only AUTO mode: there is no heating function in this mode.

(3) protections

It is same as the one in cooling or heating mode, there is only one exception , the compressor doesn't have at least 5 minutes protection.

E. other controls

1. SWING mode

a. When it is active, the louver returns to position O, close the air outlet.

b. When machine works, it turns to the max. Air output position D, then returns back to position L to stand by (position L is the horizontal place mentioned before).

c. In swing state, the louver swings between position L and position D.

d. When the machine is switched off, it is back to position O.

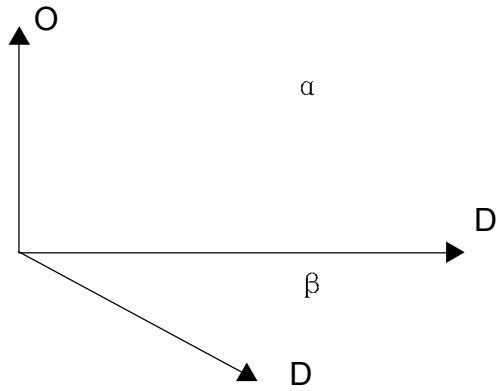

In Gree 2000 line and new 24000BTU line , α =93, β =45
In Bird line, α =80, β =25
Attention : in Bird line, the louver will stop at position D . in other lines, the louver will stop at position L)

Bird line:
a. When it is active, the louver returns to position O, close the air outlet.
b. When machine works, it turns 80 degrees to the max. Air output position D and stands by.
c. In swing state, the louver swings between position L(25) and position D.
d. When the machine is switched off, it is back to position O.

2. beeper
a. When PCB becomes active or receives the signal from the remote controller , the beeper will beep.
b. If thermostat is open-circuited or short-circuited, when you press the TEST button, the beeper will alarm at the frequency 2HZ.
3. indication lamps
it flashes when defrosting begin.
4. multi-step switch .
a. If the switch is in AUTO position, the machine will run at the AUTO mode, if there is a signal from remote controller, it will run according to the signal .
b. If the switch is in TEST position, the machine will run at the COOL mode, indoor motor will run at high speed , swing motor will run according to SWING mode. If there is a signal from remote controller, it will run according to the signal .if the thermostat is open-circuited or short-circuited , the beeper will alarm at the frequency 2 HZ .
c. If the switch is in RUN position , the machine will run according to the remote signal.
d. If the switch is in STOP position, the machine will stop.
5. SLEEP mode.
a. In cooling or dehumidifying mode, 1 hour after you set the sleep timer ,T_{set} will add 1℃automatically, another 1 hour, another 1℃ will be added.
b. In heating mode, 1 hour after you set the sleep timer, T_{set} will lower 1℃automatically, another 1 hour, another 1℃will be lowered .
6. Automatic fan speed .
a. In cooling mode, if $T_{indoor} > T_{set} + 4$℃ high speed
$T_{set} + 2$℃ ≤ T_{indoor} ≤ $T_{set} + 4$℃ middle speed
$T_{indoor} < T_{set} + 2$℃ low speed

b. b. In heating mode, if $T_{indoor} \leq T_{set} - 1$℃ high speed

T_{set} -1℃< T_{indoor} <T_{set} +1℃ middle speed

T_{indoor} ⩾ T_{set} + 2℃ low speed

F. Fresh air function.

1.there are two fresh air modes .

a.fresh air 2

fresh air motor will work 1 hour, then rest 1 hour, then cycle again.

b.fresh air 1

press the button AIR on the remote controller to select fresh air 1 function, the swing motor keeps running till you give a signal to change it.

G. air cleaning

In air cleaning mode, air cleaner works while indoor fan runs and air cleaner stops while indoor fan stops.

The speeds of the wind of all types of the air-conditioner are as below:

000: 900,850, 800, 700 (RPM);

001: 1000, 900, 850, 700(RPM);

010: 1050, 950, 900, 700(RPM);

011: 1100, 1000, 950, 700(RPM);

100: 1200, 1100, 1000, 700(RPM);

101: 1250, 1100, 1050, 700(RPM);

111: 1400, 1200, 1100, 700(RPM);

3 In 1 PCB Function manual
(for others)

A. running mode

1. cooling 2.dehumidifying 3.heating 4. auto

B. input parameters

1. indoor ambient temp. T_{in}
2. evaporator tube temp. T_{eva}
3. setting temp. T_{set}
4. condenser tube temp. T_{con}

C. targets

1. indoor motor (motor)
2. swing motor
3. outdoor motor (single speed motor)
4. compressor
5. four-way reversing valve
6. cooling, dehumidifying indicator; running indicator(for birdline, butterfly series)
7. digital tube setting temp. indicator or timer indicator

D. fundamental functions

1. cooling mode

(1) the running conditions and control measures

a. if $T_{in} \geqslant T_{set}$ + 1℃, the machine runs at the cooling mode. Compressor runs, outdoor motor runs at low speed , indoor fan runs at the set fan speed.

b. if $T_{in} \leqslant T_{set}$ -1℃, the machine stops. Compressor stops first , outdoor motor stops after 15 seconds , indoor motor runs at the set fan speed.

c. if T_{set} -1℃ $< T_{in} <$ T_{set} +1℃,keep the previous state.

(2) in this mode, the reversing valve is inactive, the temp. setting range is from 16~30℃.

(3) Protect function

a. anti-freezing function.

if compressor have run 6 minutes , and detect T_{eva}< 0℃ for continuous 3 minutes, then the compressor , outdoor fan stopped , indoor fan run at the set fan speed. After 3 minutes later, it will run at the original state if $T_{eva} \geqslant$ 10℃.

b. compressor protection

Compressor's starting interval should be more than 3 minutes no matter in whatever modes and conditions. If it's plugged in first time, the compressor does not have 3 minutes delay. When compressor is started, it will not stop within 5 minutes unless it is plugged out.

c. overload protection

If it detect the system current surpass the designed 13 A for continuous 3 minutes, the machine go into fan mode, when 3 minutes passed and it detect the current no more than 13 A, it will back to original state. If it detects overloading states for 6 consecutive times, the machine stops, and must be restarted by remote controller.

2. dehumidifying mode

(1) the working conditions and control measures

a. if $T_{in} > T_{set}+2℃$, it is in cooling running, the indoor motor speed can be selected ,and outdoor motor run at low speed.

b. If T_{set} -2℃$\leqslant T_{in} \leqslant T_{set}+2℃$,it goes into dehumidifying running ,the indoor motor run at the low speed, 6 minutes later the compressor stops, another 15 seconds later the outdoor fan stops and another 30 seconds later, the indoor motor stops, 3 and a half minutes later, compressor and outdoor fan run again ,indoor motor runs at the low speed, then the machine cycle the above procedures repeatedly. outdoor motor runs at the low speed.

c. If $T_{in} < T_{set}$ -2℃, compressor ,outdoor motor and indoor motor stop.

(2) in this mode, the reversing valve is inactive , the temp. setting range is 16~30℃.

(3) Anti-freezing protection.

If $T_{indoor} > T_{set}$ + 2℃, it goes into cooling running , anti-freezing function is same with cooling mode, but the compressor must stops for 4 minutes. when it goes into dehumidifying mode, compressor runs 6 minutes , if it detects $T_{eva} < 0℃$,compressor and outdoor motor stop, indoor motor runs at low speed ,after 3 minutes delay ,and $T_{eva} \geqslant 10℃$,it will be back to its original state.

3. heating mode

(1) the working conditions and control measures

a. If $T_{in} \leqslant T_{set}+2℃$, it goes into heating mode, reversing valve, compressor and outdoor motor all work in the same time, indoor fan will run at the same procedures with anti cool air function.

b. If $T_{in} \geqslant T_{set}$ + 4℃, compressor stops first, 15 seconds late, outdoor motor stops ,but reversing valve keeps working, indoor motor run at the procedures of blowing surplus heat.

c.if T_{set} + 2℃< T_{indoor} < T_{set} +4℃, keep the previous running state.

(2) in this mode, the temperature setting range is 16~30℃.

(3) The working conditions of auxiliary electric heater.

In heating mode, when compressor is working, indoor motor runs at high speed and middle speed . if it detect T_{eva}<50℃ for continuous 8 seconds and $T_{indoor} \leqslant 25℃$, electric heater will work ,if compressor stop or indoor motor runs at low speed or $T_{eva} \geqslant 54℃$or $T_{indoor} \geqslant 28℃$ or 10 seconds before defrosting , the electric heater will stop.

(4) protections

a .anti cool air

when the machine starts heating and $T_{eva} \geqslant 22℃$, indoor motor runs at low speed, and swing motor makes the louver at the horizontal position(in Bird line, it will swing to the maximum air volume position), if $T_{eva} \geqslant 40℃$ or compressor have run 2 minutes ,indoor motor and swing motor

will run at the set speed .

b .anti high temp.

in heating mode, if it detect $T_{eva} \geqslant 56℃$(58℃ can be selected), outdoor motor will stop(in this period it will not detect the defrosting temp.). if $T_{eva} \leqslant 52℃$, outdoor motor will be back running (it will not detect defrosting temp. in the first 5 seconds).

c. blowing surplus heat

In heating mode, when set temp is reached ,comp. stops first,15 seconds later outdoor fan stops, Indoor motor blows 90 seconds (60 seconds can be selected) at low speed ,swing motor makes the louver at the horizontal position(in Bird line,it will swing to the maximum air volume postion).

d. Compressor's protection is same with the one in cooling mode.

e. Overload protection

If it detects that the system current surpassed the designed 13 A for continuous 3 seconds, compressor, electric heater and outdoor motor stop , indoor motor runs the same procedures as the blowing surplus heat condition. After 3 minutes and current no more than 13 A, the machine will be back to its original state, indoor motor runs as the anti cool air condition. If it detects overloading state for 3 consecutive times within 30 minutes, the machine stops, and it must be restarted by remote controller.

f. defrosting conditions and procedures

In heating mode, if compressor has run 44 minutes (in its first 6 minutes it will not detect defrosting temp.) , and it has detected $T_{con} \leqslant -4℃$ for continuous 1 minutes , it begins to defrost , electric heater will stop for 10 seconds (even if electric heater is not working) , then indoor motor stops , reversing valve becomes inactive in another 2 seconds, another 2 seconds later, outdoor motor stops, when $T_{con} \geqslant 10℃$or defrosting lasts for 10 minutes , outdoor motor and reversing valve becomes active , indoor motor will run as the anti cool air condition, then it cycles again, recalculates the compressor's running time again. (In this period , if any protection works ,and after the machine is back to work , it will re-start defrosting state. it will not detect outdoor tube temp when compressor's in its first 6 minutes running)

g. noise eliminated protection

When you use RUN/STOP button to switch off the machine, reversing valve will become inactive in 2 minutes.

4. AUTO mode

(1) in AUTO mode, standard cooling T_{set}=25℃, standard heating T_{set}=20℃

(2) working procedures

a. If $T_{indoor} \geqslant T_{set}$ + 1℃, select cooling mode, from this time, the set temp. is 25℃. If Tindoor $\leqslant T_{set}$-1℃, compressor and outdoor motor stop, indoor motor runs at the set speed, if T_{set} -1℃< T_{indoor} < T_{set} +1℃, keep the original state.

b. If $T_{indoor} \leqslant T_{set}$+2℃, select heating mode, from this time, the set temp. is 20℃, if $T_{indoor} \geqslant T_{set}$ + 4℃, compressor stops first, outdoor motor stops 15 seconds later , reversing valve is always active, indoor motor runs as the blowing surplus heat condition. If T_{set} +2℃< T_{indoor} < T_{set} +4℃, keeps the

original state.

Cooling & heating AUTO mode: in AUTO mode, when the machine is switched from heating mode to the other modes, reversing valve becomes inactive in 90 seconds.

Cooling only AUTO mode: there is no heating function in this mode.

(3) protections

It is same as the one in cooling or heating mode.

E. other controls

1. SWING mode

a. When it is active, the louver returns to position O, close the air outlet.

b. When machine works, it turns to the max. Air output position D, then returns back to position L to stand by (position L is the horizontal place mentioned before).

c. In swing state, the louver swings between position L and position D.

d. When the machine is switched off, it is back to position O.

e. When the machine is running and the swing is off, the louver stops at position E.

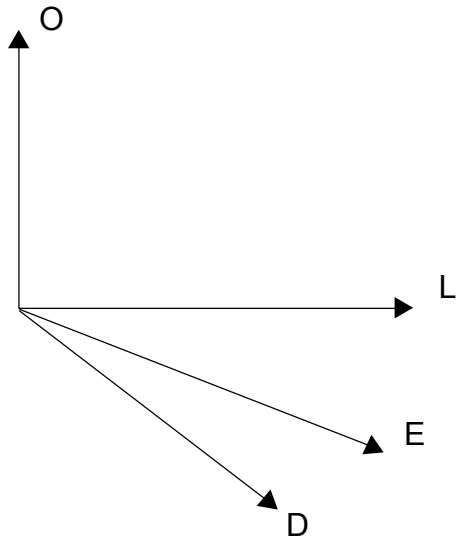

2. beeper

When PCB becomes active or receives the signal from the remote controller , the beeper will beep.

3. indication lamps

it flashes when defrosting begin.

4. press the AUTO button a time, the machine runs in AUTO mode, indoor motor runs in low speed, fresh air function is not active, press again the machine stops.

5. digital tube display(bee, butterfly)

(1) the digital tube displays the setting temperature(the range is16~30℃) when the machine is running

(2) The digital tube displays the setting time(the range is 1~24 hours) for 5 seconds when remote controller sets timer of on/off. Then come back to display the setting time; timer dis-

plays "—", it means that timer setting is canceled.

(3) Light button: when remote controller(Y512) sends light signal, the digital tube is lighted for 2~4 seconds then turns off.

6. Fresh air function.

there are two fresh air modes .

a.fresh air 2

fresh air motor will work 1 hour, then rest 1 hour, then cycle again.

b.fresh air 1

press the button AIR on the remote controller to select fresh air 1 function, the swing motor keeps running till you give a signal to change it.

7. Automatic fan speed .

a. in cooling mode, if Tindoor > T_{set} + 5℃	high speed
T_{indoor} ≥T_{set} +3℃	middle speed
T_{indoor} ≥ T_{set} + 1℃	low speed
b. in heating mode, if Tin_{door} ≤Tset - 5℃	high speed
T_{indoor} ≤Tset -3℃	middle speed
T_{indoor} ≤Tset -1℃	low speed
c. c. in dehumidify mode, if T_{indoor} ≥ T_{set} + 5℃	high speed
T_{indoor} ≥ T_{set} + 2℃	low speed

8. SLEEP mode.

a. in cooling or dehumidifying mode, 1 hour after you set the sleep timer ,T_{set} will add 1℃automatically, another 1 hour, another 1℃ will be added.

b. In heating mode, 1 hour after you pset the sleep timer, T_{set} will lower 1℃automatically, another 1 hour, another 1℃will be lowered .

8.Cassette type series

8.1 Summary.

figure 8-1

MODEL	NOTE
KF-50TW/E1(5031T1) KFR-50TW/E1(5051T1) KF-70TW/B1(7031T1) KFR-70TW/B1(7051T1)	1Ph 220-230V~50Hz R22
KF-50TW/E1(5031T1)N KFR-50TW/E1(5051T1)N KF-70TW/B1(7031T1)N KFR-70TW/B1(7051T1)N	1Ph 220-230V~50Hz R407C
KF-70TW/B(7031T)C KFR-70TW/B(7041T)	3Ph 380-400V~50Hz R22
KF-70TW/B(7031T)N KFR-70TW/B(7041T)N	3Ph 380-400V~50Hz R407C

Cassette type series

figure 8-2

MODEL	NOTE
KF-120TW/B(1231T)C KFR-120TW/B(1251T)B	3Ph 380-400V~50Hz R22
KF-120TW/B(1231T)N KFR-120TW/B(1241T)N	3Ph 380-400V~50Hz R407C

8.2 Technical specifications.

Table 8-1

Model			KF-50TW/E1 (5031T1)	KFR-50TW/E1 (5051T1)		KF-70TW/B1 (7031T1)	KFR-70TW/B1 (7051T1)	
Function			Cooling	Cooling	Heating	Cooling	Cooling	Heating
Power supply			1PH,220V-50Hz					
Capacity	Kcal/h		4300	4300	4644	6020	6020	6450
	Btu/h		17065	17065	18430	23891	23891	25598
	W		5000	5000	5400	7000	7000	7500
Rated input (W)			1995	1995	1995	2750	2750	2750
Rated current (A)			9.3	9.3	9.3	4.8	4.8	4.8
Air flow (m^3/h)			680			1180		
Electric heater power (W)			\	700		\	1400	
Dehumidifying volume(L/h)			2.9			4.0		
Indoor unit	Model		KF-50T1 (5031T1)	KFR-50T1 (5051T1)		KF-70T1 (7031T1)	KFR-70T1 (7051T1)	
	Motor fan speed(r/min)		620/570/520			600/550/500		
	Output power(W)		35W					
	Fan type/piece		Centrifugal fan-1					
	Diameter-length(mm)		ϕ 450mm/112mm			ϕ 450mm/140mm		
	Evaporator		Aluminum fin-copper tube					
	Row-fin distance(mm)		2/1.3			3/1.5	2/1.5	
	Working area(mm^2)		1980x114.3			1980x171.5		
	Swing motor		SM008					
	Input power-speed		3W-2.5r/min					
	Control method		Remote control					
	Fuse(mA)		3.15A 0.2A					
	Work capacitor(μF)		3.5			3.5		
	Noise(dB(A))		⩽ 46			⩽ 47		
	Outline panel	Width (mm)	950					
		Height (mm)	60					
		Depth (mm)	950					
	Outline Main body	Width (mm)	840					
		Height (mm)	190			240		
		Depth (mm)	840					
	Net weight(kg)	Panel	6.5					
		Main body	25			30		

The technical date are subject to change without notice .Please refer to the nameplate of the unit.

Table 8-1 continue

Model			KF-50TW/E1 (5031T1)	KFR-50TW/E1 (5051T1)	KF-70TW/B1 (7031T1)	KFR-70TW/B1 (7051T1)
Outdoor unit	Model		KF-50W/tE1	KFR-50W/tE1	KF-70W/tB1	KFR-70W/tB1
	Input power W		1880	1880/1880	2610	2610/2480
	Current A		8.8	8.8	11.85	11.85/11.3
	Throttling method		Capillary			
	Compressor	type	Rotary		Reciprocating	
		model	SHW33TC4-U		AWG5532EXC	
		Starting method	PSC		CSR	
		Overload protector	Inner			
		L.R.A A	49		82	
		Working temp. (℃)	120		143.3	
		Input power W	1990		2660	
	Condenser		Aluminum fin-copper tube			
	Row-fin diatance(mm)		2/1.8		2/2.0	
	Working area (mm × mm)		670x600		810x600	
	Fan motor	Model	FW60D	FW60B	FW60D	FW60T
		Output power (W)	60		60	
		Fan motor speed (rpm)	780/620	780/620/350	780/620	780/620/620
		Quantity	1		1	
	Fan type/piece		Axial flow fan/1			
	Fan diameter (mm)		ϕ 450			
	Defrost method		Auto defrost			
	Noise [dB(A)]		⩽ 58		⩽ 60	
	Outl ine	Width (mm)	950		950	
		height (mm)	710		840	
		depth (mm)	412		412	
	Net weight (kg)		65		75	
	Refrigerant		R22			
	Refrigerant charge(kg)		2.2	2.05	2.7	
Connection pipe	Diameter	Liquid pipe(mm)	ϕ 9.52 3/8”			
		Gas pipe(mm)	ϕ 16 5/8”			
	Standard length(m)		5			
	Max. Distance (m)	height	5			
		length	10			

The technical date are subject to change without notice .Please refer to the nameplate of the unit.

Cassette type series

Table 8-2

Model			KF-70TW/B(7031T)	KFR-70TW/B (7041T)		KFR-70TW/B (7051T)		KF-120TW/B(1231T)C	KFR-120TW/B (1241T)C		KFR-120TW/B (1251T)B
Function			Cooling	Cooling	Heating	Cooling	Heating	Cooling	Cooling	Heating	Heating
Power supply			3Ph,380V~50Hz								
Capacity(W)	Kcal/h		6020	6020	6450	6020	6450	10320	10320	10750	10750
	Btu/h		23891	23891	25598	23891	25598	40956	40956	42663	42663
	W		7000	7000	7500	7000	7500	12000	12000	12500	12500
Rated input (W)			2750	2750	2600	2750	2750	2600	4750	4400	4400
Rated current (A)			4.8	4.8	4.6	4.8	4.8	4.6	8.0	7.5	7.5
Air flow (m^3/h)			1180					1860			
Electric heater power (W)						2000		2100			
Dehumidifying volume(L/h)			4.0					7.0			
Indoor unit	Model		KF-70T (7031T1)	KFR-70T1 (7041T1)		KFR-70T1 (7051T1)		KF-120T (1231T)C	KFR-120T (1241T)		KFR-120T (1251T)B
	Motor fan speed(r/min)		600/550/500					610/560/510			
	Output power(W)		35W					50W			60W
	Fan type/piece		Centrifugal fan-1								
	Diameter-length(mm)		ϕ 450mm/140mm					ϕ 502mm/160mm			
	Evaporator		Aluminum fin-copper tube								
	Row-fin distance(mm)		2/1.5					3/1.5			2/1.5
	Working area(m^2)		1980x171.5					1980x252			
	Swing motor		SM008								
	InputPower-speed		3W-2.5r/min								
	Control method		Remote control								
	Fuse(mA)		3.15A 0.2A								
	Workcapacitor(μF)		3.5					4.5			
	Noise(dB(A))		⩽ 47					⩽ 53			
	Outline panel	Width (mm)	950								
		Height (mm)	950								
		Depth (mm)	60								
	Outline Main body	Width (mm)	840								
		Depth (mm)	840								
		Height (mm)	240					320			
	Net weight(kg)	Panel	6.5								
		Main body	30					38			

The technical date are subject to change without notice .Please refer to the nameplate of the unit.

Table 8-2 Continue.

Model			KF-70TW/B (7031T1)	KFR-70TW/B (7041T1)	KFR-70TW/B (7051T1)	KF-120TW/B1 (1231T)C	KFR-120TW/B (1241T)B
Outdoor unit	Model		KF-70W/tB	KFR-70W/tB		KF-120W/tBC	KFR-120W/tB
	Input power W		2630	2630/2480		4600	4600/4250
	Current A		4.8	4.8/4.6		7.5	7.5/7.0
	Throttling method		Capillary				
	Compressor	type	Reciprocating				
		model	AVA5535EXG			AVA5561EXG	
		Starting method	IR				
		Overload protector	Inner				
		L.R.A A	32.8			62	
		Working temp. (℃)	43.3				
		Input power W	2842			5248	
	Condenser		Aluminum fin-copper tube				
	Row-fin diatance(mm)		2/2.0				
	Working area (mmxmm)		810x600			1219x600	
	Fan motor	Model	FW60D	FW60T		FW68D	FW68T
		Output power (W)	60			68	
		Fan motor speed (rpm)	780/620	780/620/620		840/640	840/740/640
		Quantity	1			2	
	Fan type/piece		Axial flow fan/1			Axial flow fan/2	
	Fan diameter (mm)		ϕ 450				
	Defrost method		Auto defrost				
	Noise [dB(A)]		⩽ 60			⩽ 63	
	Out line	Width (mm)	950			950	
		height (mm)	840			1250	
		depth (mm)	412			412	
	Net weight (kg)		75			112	
	Refrigerant		R22				
	Refrigerant charge(kg)		2.6	2.7		4.0	4.2
Connection pipe	Diameter	Liquid pipe(mm)	ϕ 9.52 3/8”			ϕ 12 1/2”	
		Gas pipe(mm)	ϕ 16 5/8”			ϕ 19 3/4”	
	Standard length(m)		5				
	Max. Distance	height	5				
		length	10				

The technical date are subject to change without notice .Please refer to the nameplate of the unit.

Table 8-3

Model			KF-50TW/E1N	KFR-50TW/E1N		KF-70TW/B1N 12305	KFR-70TW/B1N 12305	
Function			Cooling	Cooling	Heating	Cooling	Cooling	Heating
Power supply			1Ph,220-230V~50Hz					
Capacity(W)	Kcal/h		4300	4300	4644	6020	6020	6450
	Btu/h		17065	17065	18430	23891	23891	25598
	W		5000	5000	5400	7000	7000	7500
Rated input (W)			1995	1995	1995	2750	2750	2750
Rated current (A)			9.3	9.3	9.3	4.8	4.8	4.8
Air flow (m^3/h)			680			1180		
Dehumidifying volume(L/h)			2.9			4.0		
Indoor unit	Model		KF-50T1N	KFR-50T1N		KF-70T1N 12305	KFR-70T1N 12305	
	Motor fan speed(r/min)		620/570/520			600/550/500		
	Output power(W)		35W					
	Fan type/piece		Centrifugal fan-1					
	Diameter-length(mm)		ϕ 450mm/112mm			ϕ 450mm/140mm		
	Evaporator		Aluminum fin-copper tube					
	Row-fin distance(mm)		2/1.3			2/1.5		
	Working area(m^2)		1980x114.3			1980x171.5		
	Swing motor		SM008					
	Input power-speed		3W-2.5r/min					
	Control method		Remote control					
	Fuse(mA)		3.15A 0.2A					
	Work capacitor(μF)		3.5			3.5		
	Noise(dB(A))		⩽ 46			⩽ 47		
	Outline panel	Width (mm)	950					
		Height (mm)	60					
		Depth (mm)	950					
	Outline Main body	Width (mm)	840					
		Height (mm)	190			240		
		Depth (mm)	840					
	Net weight(kg)	Panel	6.5					
		Main body	25			30		

The technical date are subject to change without notice .Please refer to the nameplate of the unit.

Table 8-3 Continue

Model			KF-50TW/E1N	KFR-50TW/E1N	KF-70TW/B1N 12305	KFR-70TW/B1N 12305
Outdoor unit	Model		KF-50W/tE1N	KFR-50W/tE1N	KF-70W/tB1N 12305	KFR-70W/tB1N 12305
	Input power W		1880	1880/1880	2610	2610/2480
	Current A		8.8	8.8	11.85	11.85/11.3
	Throttling method		Capillary			
	Compressor	Rotary	Rotary		Rotary	
		model	C-2RN170H5U		C-RN220H5B	
		Starting method	PSC		CSR	
		Overload protector	inner			
		L.R.A A	49		82	
		Working temp. (℃)	120		143.3	
		Input power W	1990		2600	
	Condenser		Aluminum fin-copper tube			
	Row-fin diatance(mm)		2/1.8		2/2.0	
	Working area (mm × mm)		670x600		810x600	
	Fan motor	Model	FW60D	FW60B	FW60D	FW60T
		Output power (W)	60		60	
		Fan motor speed (rpm)	780/620	780/620/350	780/620	780/620/620
		Quantity	1		1	
	Fan type/piece		Axial flow fan/1			
	Fan diameter (mm)		ϕ 450			
	Defrost method		Auto defrost			
	Noise [dB(A)]		⩽ 58		⩽ 60	
	Outline	Width (mm)	950		950	
		height (mm)	710		840	
		depth (mm)	412			
	Net weight (kg)		65		75	
	Refrigerant		R407C			
	Refrigerant charge(kg)		2.2	2.2	2.8	
Connection pipe	Diameter	Liquid pipe(mm)	ϕ 9.52 3/8”			
		Gas pipe(mm)	ϕ 16 5/8”			
	Standard length(m)		5			
	Max.Distance	height	5			
		length	10			

The technical date are subject to change without notice .Please refer to the nameplate of the unit.

Cassette type series

Table 8-4

Model			KF-70TW/BN 34005	KFR-70TW/BN 34005		KF-120TW/BN 34005	KFR-120TW/BN 34005	
Function			Cooling	Cooling	Heating	Cooling	Cooling	Heating
Power supply			3Ph,380~400V~50Hz					
Capacity(W)	Kcal/h		6020	6020	6450	10320	10320	10750
	Btu/h		23891	23891	25598	40956	40956	42663
	W		7000	7000	7500	12000	12000	12500
Rated input (W)			2750	2750	2600	2600	4750	4400
Rated current (A)			4.8	4.8	4.6	4.6	8.0	7.5
Air flow (m^3/h)			1180			1860		
Dehumidifying volume(L/h)			4.0			7.0		
Indoor unit	Model		KF-70T1 34005	KFR-70T 34005		KF-120T 34005	KFR-120T 34005	
	Motor fan speed(r/min)		600/550/500			610/560/510		
	Output power(W)		35W			50W		
	Fan type/piece		Centrifugal fan-1			Centrifugal fan-2		
	Diameter-length(mm)		ϕ 450mm/112mm			ϕ 502mm/160mm		
	Evaporator		Aluminum fin-copper tube					
	Row-fin distance(mm)		2/1.5			3/1.5		
	Working area(m^2)		1980x171.5			1980x252		
	Swing motor		SM008					
	Input power-speed		3W-2.5r/min					
	Control method		Remote control					
	Fuse(mA)		3.15A 0.2A					
	Work capacitor(μF)		3.5			3.5		
	Noise(dB(A))		⩽ 47			⩽ 53		
	Outline panel	Width (mm)	950					
		Height (mm)	950					
		Depth (mm)	60					
	Outline Main body	Width (mm)	840					
		Depth (mm)	840					
		Height (mm)	240			320		
	Net weight(kg)	Panel	6.5					
		Main body	30			38		

The technical date are subject to change without notice .Please refer to the nameplate of the unit.

Table 8-4 Continue

Model			KF-70TW/EN 34005	KFR-70TW/BN 34005	KF-120TW/B 34005	KFR-120TW/B 34005
Outdoor unit	Model		KF-70W/tBN 34005	KFR-70W/tBN 34005	KF-120W/tbn 34005	KFR-120W/tBN 34005
	Input power W		2630	2630/2480	4600	4600/4250
	Current A		4.8	4.8/4.6	7.5	7.5/7.0
	Throttling method		Capillary			
	Compressor	type	Rotary		Scrou	
		model	C-RN243H8A		C-SBN373H8A	
		Starting method	IR			
		Overload protector	Inner			
		L.R.A A	32.8		62	
		Working temp. (℃)	143.3			
		Input power W	2842		5248	
	Condenser		Aluminum fin-copper tube			
	Row-fin diatance(mm)		2/2.0			
	Working area (mm × mm)		810x600		1219x600	
	Fan motor	Model	FW60D	FW60T	FW68D	FW68A
		Output power (W)	60		68	
		Fan motor speed (rpm)	780/620	780/620/620	840/640	840/350/350
		Quantity	1		2	
	Fan type/piece		Axial flow fan/1		Axial flow fan/2	
	Fan diameter (mm)		ϕ 450			
	Defrost method		Auto defrost			
	Noise [dB(A)]		⩽ 60		⩽ 63	
	Outl ine	Width (mm)	950		950	
		height (mm)	840		1250	
		depth (mm)	412		412	
	Net weight (kg)		75		112	
	Refrigerant		R407C			
	Refrigerant charge(kg)		2.6	2.7	3.8	3.8
Connection pipe	Diameter	Liquid pipe(mm)	ϕ 9.52 3/8”		ϕ 12 1/2”	
		Gas pipe(mm)	ϕ 16 5/8”		ϕ 19 3/4”	
	Standard length(m)		5			
	Max.Distance	height	5			
		length	10			

The technical date are subject to change without notice .Please refer to the nameplate of the unit.

8.3 Outlines and dimensions of indoor unit

Model	H
50	220
70	270
120	355

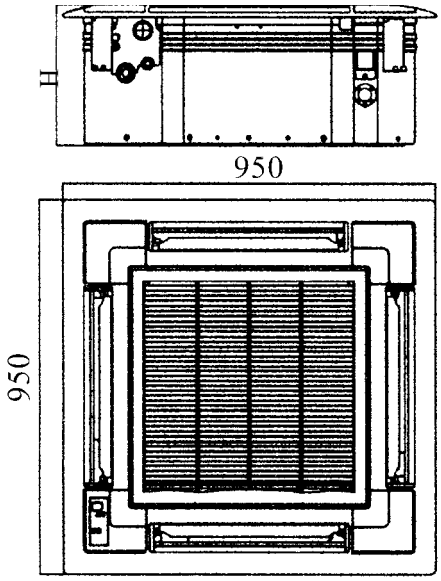

unit:mm

Model	H
50	210
70	260
120	340

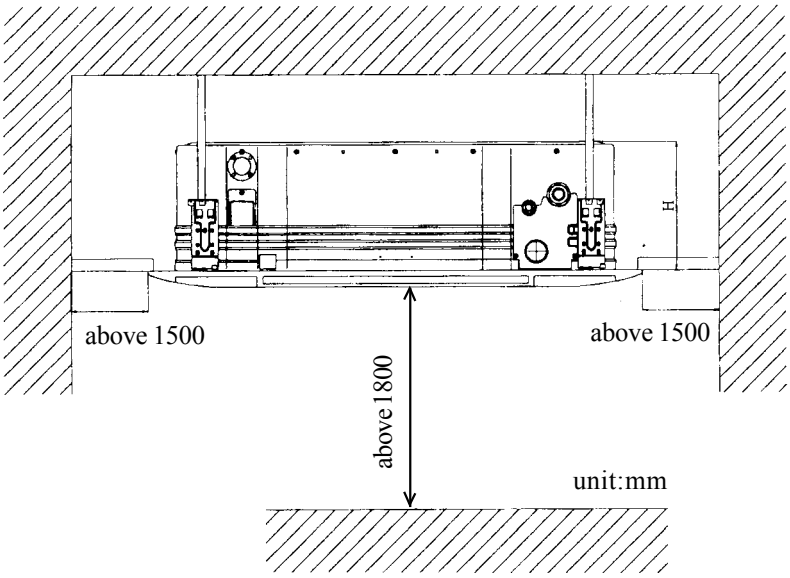

figure 8-3

8.4 Outlines and dimensions of outdoor unit

For 50,70 model

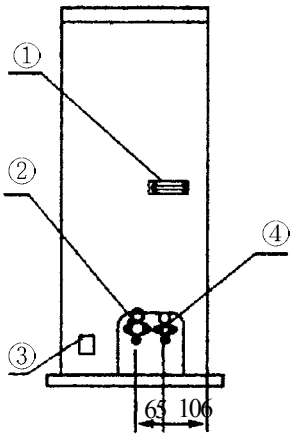

11.6-1

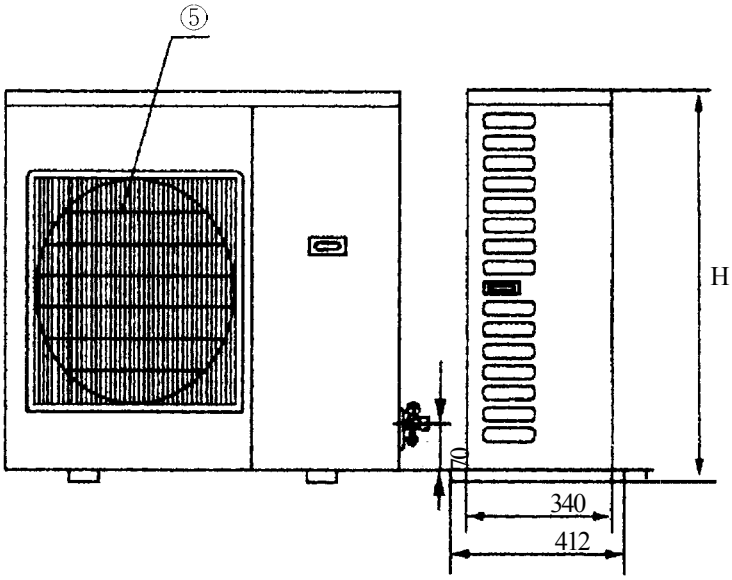

Model	H(mm)
70	840
50	710

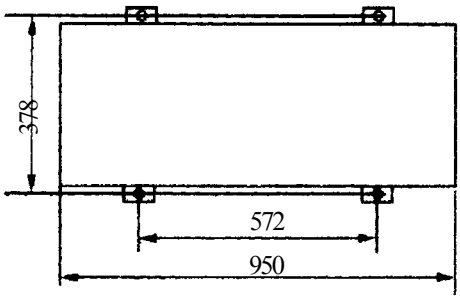

unit:mm

① handle ② gas valve ③ wire hole ④ liquid valve ⑤ frout grill

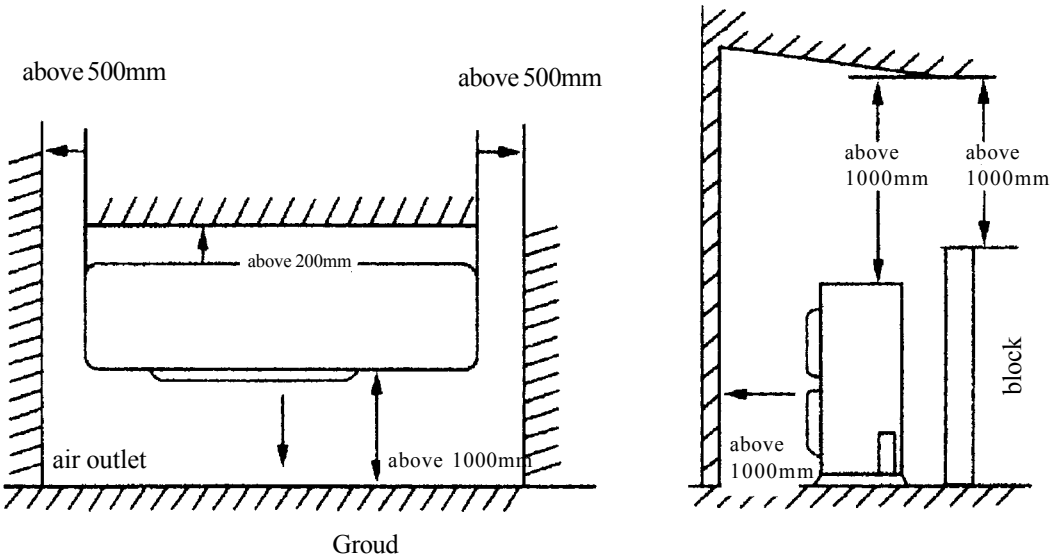

figure 8-4

For 120 model

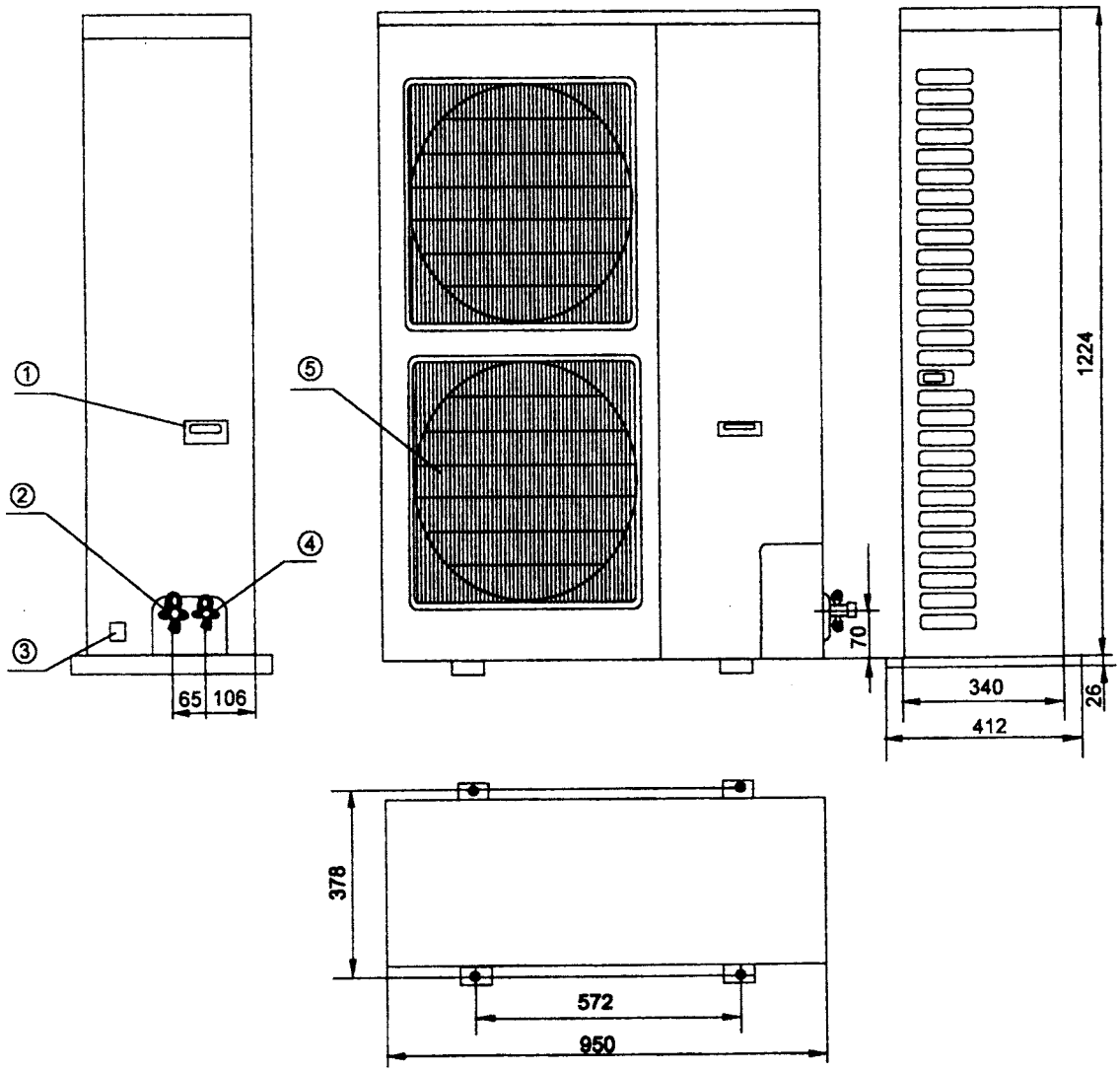

① handle ② gas valve ③ wire hole ④ liquid valve ⑤ frout grill

figure 8-5

8.5 Explosive view of indoor panel

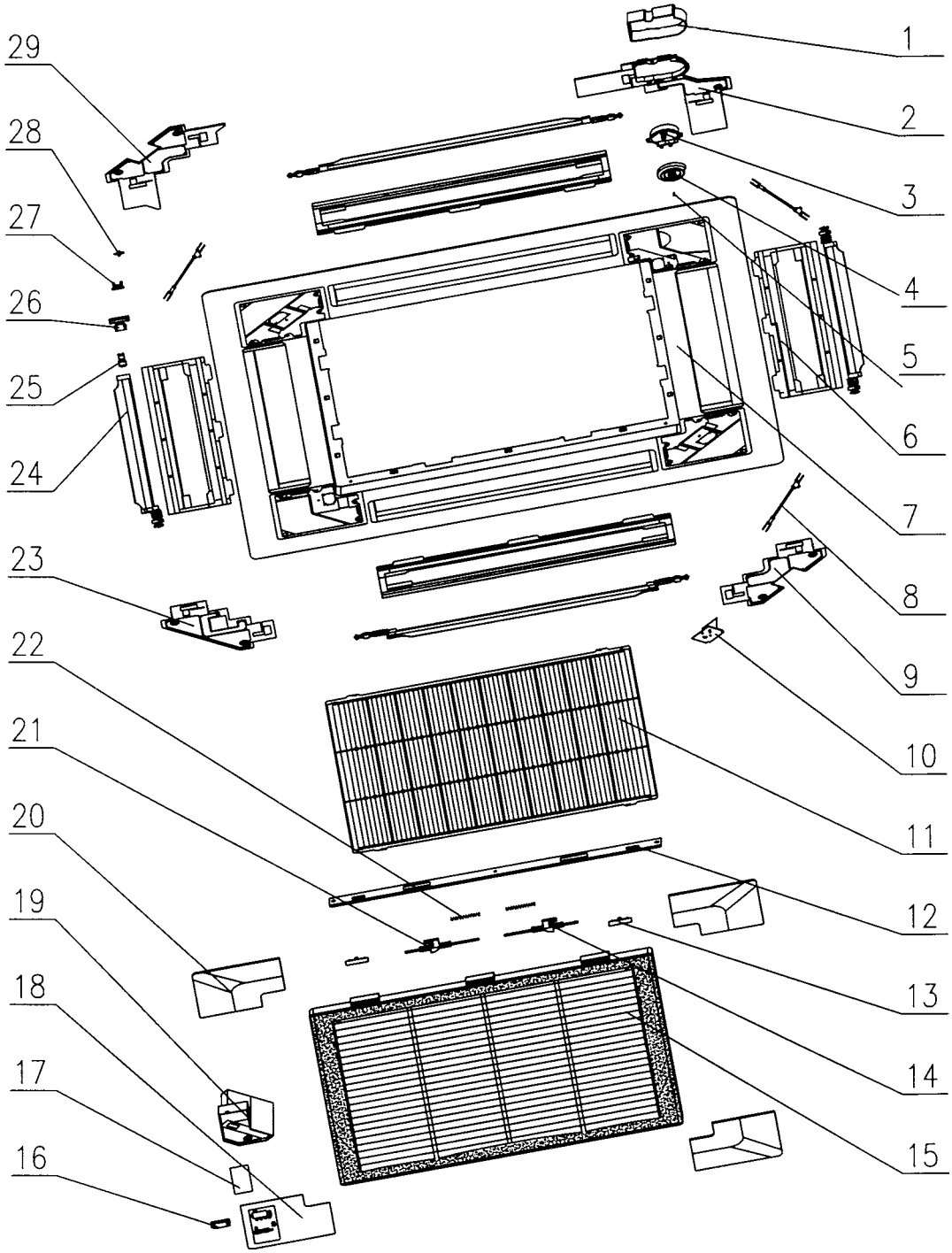

figure 8-6

8.6 Spare parts list of indoor unit

Table 8-5

No	Description		Part No	Qty
			T01	
1	Motor Cover	电机盖	22242701	1
2	Inner Conner Cover IV	角内盖 IV	02242705	1
3	Synchronous Motor	同步电机 SM008	15212701	1
4	Motor Holder	电机座	26152702	1
5	Pin	销3X4	70410003	1
6	Air Outlet Foam	出风口泡沫	12312701	4
7	Front Panel	面板	20002701	1
8	Connecting Lever	连杆	10582701	3
9	Inner Conner Cover III	角内 盖Ⅲ	22242704	1
10	Hanging Ring	吊环件	70810101	4
11	Filter	过滤网	11122701	1
12	Fixing Plate of Net Hook	网扣固定板	01722721	1
13	Net Hook	网扣	26252703	2
14	Right Clamp	右卡扣	26252702	1
15	Air Inlet Grille	进风格栅	22412702	1
16	Receiving Window	接收窗	22432702	1
17	Receiver PCB	接收板	30002603	1
18	Outer Conner Cover II	角外盖Ⅱ	22242707	1
19	Cover of Receiving Window	接收窗盖	22242708	1
20	Outer Conner Cover I	角外盖Ⅰ	22242706	3
21	Left Clamp	左卡扣	26252701	1
22	Spring	弹簧	73010011	2
23	Inner Conner Cover II	角内盖Ⅱ	22242703	1
24	Air Guider Assy	导风板部件	75112721	4
25	Crank	活动轴	10542701	8
26	Positioning Holder	定位座	26152701	8
27	Universal Joint	万向头	10562702	8
28	Gimbal	万向节	10562701	8
29	inner conner cover I	角内盖Ⅰ	22242702	1

The data are subject to change without notice.

8.7 Explosive view of outdoor unit

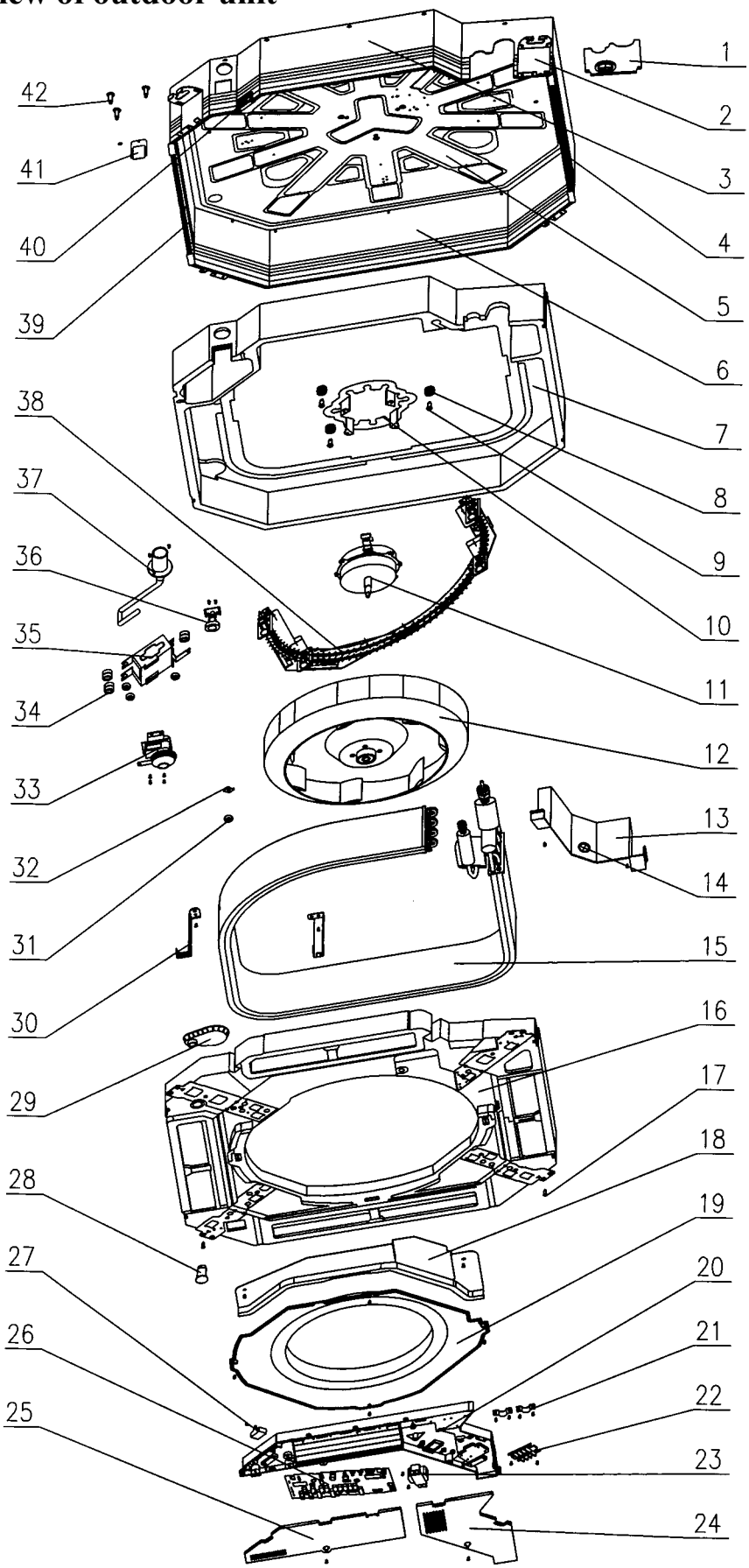

figure 8-7

8.8 Spare parts list of indoor unit

Table 8-6

No	Description		Part No						Qty
			KF-50T/E1N	KFR-50T/E1N	KF-70T/B1N	KFR-70T/B1N	KF-120T/BN	KFR-120T/BN	
1	Tube-exit Plate	出管口板部件	01382717	01382717	01382715	01382715	01382715	01382715	1
2	Body Fixing Plate	主体安装板	01332701	01332701	01332701	01332701	01332701	01332701	1
3	Front Side Plate	前侧板部件	01302717	01302717	\	\	\	\	1
3	Front Side Plate	前侧板部件	\	\	01302713	01302713	\	\	1
3	Front Side Plate	前侧板部件	\	\	\	\	01302718	01302718	1
4	Left Side Plate	左侧板部件	01302740	01302740	\	\	\	\	1
4	Left Side Plate	左侧板部件	\	\	01302715	01302715	\	\	1
4	Left Side Plate	左侧板部件	\	\	\	\	01302711	01302711	1
5	Busing plate	底板	01222702	01222702	01222702	01222702	01222702	01222702	1
6	Rear Side Plate	后侧板部件	01302719	01302719	\	\	\	\	1
6	Rear Side Plate	后侧板部件	\	\	01302714	01302714	\	\	1
6	Rear Side Plate	后侧板部件	\	\	\	\	01302709	01302709	1
7	Bottom Foam	底板泡沫部件	52012720	52012720	52012722	52012722	52012721	52012721	1
8	Motor Gasket	电机橡胶垫	76712711	76712711	76712711	76712711	76712711	76712711	1
9	Bolt	螺栓	70212711	70212711	70212711	70212711	70212711	70212711	1
10	Motor Support	电机固定架	01702701	01702701	01702701	01702701	01702701	01702701	1
11	Motor FN35D	电机(FN35D)	15012705	15012705	\	\	\	\	1
11	Motor FN35D	电机(FN35B)	\	\	15012703	15012703	\	\	1
11	Motor FN50T	电机(FN50T)	\	\	\	\	15012710	15012710	1
11	Motor FN60T	电机(FN60T)	\	\	\	\	\		1
12	Centifugal Fan	离心风叶	10312721	10312721	\	\	\	\	1
12	Centifugal Fan	离心风叶	\	\	10312705	10312705	\	\	1
12	Centifugal Fan	离心风叶	\	\	\	\	10312741	10312741	1
13	Evap Connection	蒸发器连接板部件	01072004	01072004	01074042	01074042	01072730	01072732	1
14	Cable-cross Loop	过线胶圈	76512701	76512701	76512701	76512701	76512701	76512701	1
15	Evaporator Assy	蒸发器部件	01002720	01002720	\	\	\	\	1
15	Evaporator Assy	蒸发器部件	\	\	01002721	01002721	\	\	1
15	Evaporator Assy	蒸发器部件	\	\	\	\	01002704	01002704	1
16	Water Tray	接水盘部件	20182701	20182701	20182701	20182701	20182701	20182701	1
17	Rubber Plug	橡胶塞	76712701	76712701	76712701	76712701	76712701	76712701	1
18	Electric Plate	电器盒底板	01412721	01412721	01412721	01412721	01412721	01412721	1
19	Flow-guide Loop	导流圈	10372701	10372701	10372701	10372701	10372701	10372701	1
20	Electric Box	电器盒	20102701	20102701	20102701	20102701	20102701	20102701	1
21	Insulated Clamp	绝缘线夹 B	71010082	71010082	71010082	71010082	71010082	71010082	3
22	Terminal Board	接线板 T360B	42011222	42011222	42011222	42011222	42011222	42011222	1
23	Transformer	电源变压器(SC28B1)	43110170	43110170	43110170	43110170	43110170	43110170	1
24	Electric Box Cover I	电器盒盖 I	20102702	20102702	20102702	20102702	20102702	20102702	1
25	Electric Box Cover II	电器盒盖 II	20102703	20102703	20102703	20102703	20102703	20102703	1
26	PCB 6051	控制器 6051	30026629	\	30026629	\	30026629	\	1
26	PCB 6053	控制器 6053	\	30026620	\	30026620	\	30026620	1
27	Capacitor 3.5uF	电容 3.5uF	33010010	33010010	33010010	33010010	\	\	1
27	Capacitor 4.5uF	电容 4.5uF	\	\	\	\	33010012	33010012	1
28	Rubber Plug	橡胶塞	76712701	76712701	76712701	76712701	76712701	76712701	1
29	Drainage Plastic	排水塑件	06122701	06122701	06122701	06122701	06122701	06122701	1
30	Evap Support	蒸发器固定架部件	01072704	01072704	01072703	01072703	01072705	01072705	2
31	Nut with Washer	带垫螺母 M6	70310012	70310012	70310012	70310012	70310012	70310012	1
32	Fixer	风叶固定件	10312701	10312701	10312701	10312701	10312701	10312701	1
33	Water Pump	水泵	43130318	43130318	43130318	43130318	43130318	43130318	1
34	Pump Gasket	水泵橡胶垫	76712702	76712702	76712702	76712702	76712702	76712702	3
35	Pump Support	水泵安装架	01332001	01332001	01332702	01332702	01332721	01332721	1

Table 8-6 continue

No	Description		Part No						Qty
			KF-50T/E1N	KFR-50T/E1N	KF-70T/B1N	KFR-70T/B1N	KF-120T/B1N	KFR-120T/B1N	
36	Water Level Switch	液位开关	45010201	45010201	45010201	45010201	45010201	45010201	1
37	Pump Drainpipe	水泵排水管(2P)	05232721	05232721	\	\	\	\	1
37	Pump Drainpipe	水泵排水管	\	\	05230026	05230026	05230026	05230026	1
38	Auxiliary Heater	辅助电加热部件	\	\	\	\	\	\	1
39	Right Side Plate	右侧板部件	01302710	01302710	\	\	\	\	1
39	Right Side Plate	右侧板部件	\	\	01302716	01302716	\	\	1
39	Right Side Plate	右侧板部件	\	\	\	\	01302712	01302712	1
40	Cable-cross Block	过线胶块	76512702	76512702	76512702	76512702	76512702	76512702	1
41	Pump Cover Board	水泵备用盖板部件	01252712	01252712	01252713	01252713	01252713	01252713	1
42	Bolt	螺栓	70212701	70212701	70212701	70212701	70212701	70212701	3
43	Remote Controller	英文遥控器	30512505	30512505	30512505	30512505	30512505	30512505	1

The data are subject to change without notice.

Table 8-7

No	Description		Part No						Qty
			KF-50T/E1	KFR-50T/E1	KF-70T/B1	KFR-70T/B1	KF-120T/B	KFR-120T/B	
1	Tube-exit Plate	出管口板部件	01382717	01382717	01382715	01382715	01382715	01382715	1
2	Body Fixing Plate	主体安装板	01332701	01332701	01332701	01332701	01332701	01332701	1
3	Front Side Plate	前侧板部件	01302717	01302717	\	\	\	\	1
3	Front Side Plate	前侧板部件	\	\	01302713	01302713	\	\	1
3	Front Side Plate	前侧板部件	\	\	\	\	01302718	01302718	1
4	Left Side Plate	左侧板部件	01302740	01302740	\	\	\	\	1
4	Left Side Plate	左侧板部件	\	\	01302715	01302715	\	\	1
4	Left Side Plate	左侧板部件	\	\	\	\	01302711	01302711	1
5	Busing plate	底板	01222702	01222702	01222702	01222702	01222702	01222702	1
6	Rear Side Plate	后侧板部件	01302719	01302719	\	\	\	\	1
6	Rear Side Plate	后侧板部件	\	\	01302714	01302714	\	\	1
6	Rear Side Plate	后侧板部件	\	\	\	\	01302709	01302709	1
7	Bottom Foam	底板泡沫部件	52012720	52012720	52012722	52012722	52012721	52012721	1
8	Motor Gasket	电机橡胶垫	76712711	76712711	76712711	76712711	76712711	76712711	1
9	Bolt	螺栓	70212711	70212711	70212711	70212711	70212711	70212711	1
10	Motor Support	电机固定架	01702701	01702701	01702701	01702701	01702701	01702701	1
11	Motor FN35D	电机(FN35D)	15012705	15012705	\	\	\	\	1
11	Motor FN35D	电机(FN35B)	\	\	15012703	15012703	\	\	1
11	Motor FN50T	电机(FN50T)	\	\	\	\	15012710	15012710	1
11	Motor FN60T	电机(FN60T)	\	\	\	\	\	15012706	1
12	Centifugal Fan	离心风叶	10312721	10312721	\	\	\	\	1
12	Centifugal Fan	离心风叶	\	\	10312705	10312705	\	\	1
12	Centifugal Fan	离心风叶	\	\	\	\	10312741	10312741	1
13	Evap Connection	蒸发器连接板部件	01072004	01072004	01074042	01074042	01072730	01072732	1
14	Cable-cross Loop	过线胶圈	76512701	76512701	76512701	76512701	76512701	76512701	1
15	Evaporator Assy	蒸发器部件	01002713	01002713	\	\	\	\	1
15	Evaporator Assy	蒸发器部件	\	\	01002716	01002716	\	\	1
15	Evaporator Assy	蒸发器部件	\	\	\	\	01002704	01002704	1
16	Water Tray	接水盘部件	20182701	20182701	20182701	20182701	20182701	20182701	1
17	Screw	带垫自攻螺丝钉	70140032	70140032	70140032	70140032	70140032	70140032	4
18	Electric Plate	电器盒底板	01412721	01412721	01412721	01412721	01412721	01412721	1
19	Flow-guide Loop	导流圈	10372701	10372701	10372701	10372701	10372701	10372701	1
20	Electric Box	电器盒	20102701	20102701	20102701	20102701	20102701	20102701	1
21	Insulated Clamp	绝缘线夹 B	71010082	71010082	71010082	71010082	71010082	71010082	3
22	Terminal Board	接线板 T360B1	42010171	42010171	42010171	42010171	42010171	\	1
23	Transformer	电源变压器(SC28B1)	43110170	43110170	43110170	43110170	43110170	43110170	1
24	Electric Box Cover I	电器盒盖 I	20102702	20102702	20102702	20102702	20102702	20102702	1
25	Electric Box Cover II	电器盒盖 II	20102703	20102703	20102703	20102703	20102703	20102703	1
26	PCB 6051	控制器 6051	30026629	\	30026629	\	30026629	\	1
26	PCB 6053	控制器 6053	\	30026620	\	30026620	\	30026620	1
27	Capacitor 3.5uF	电容 3.5uF	33010010	33010010	33010010	33010010	\	\	1
27	Capacitor 4.5uF	电容 4.5uF	\	\	\	\	33010012	33010012	1
28	Rubber Plug	橡胶塞	76712701	76712701	76712701	76712701	76712701	76712701	1
29	Drainage Plastic	排水塑件	06122701	06122701	06122701	06122701	06122701	06122701	1
30	Evaporator Support	蒸发器固定架部件	01072704	01072704	01072703	01072703	01072705	01072707	2
31	Nut with Washer	带垫螺母 M6	70310012	70310012	70310012	70310012	70310012	70310012	1
32	Fixer	风叶固定件	10312701	10312701	10312701	10312701	10312701	10312701	1
33	Water Pump	水泵(PJV-1415)	43130318	43130318	43130318	43130318	43130318	43130318	1
34	Pump Gasket	水泵橡胶垫	76712702	76712702	76712702	76712702	76712702	76712702	3
35	Pump Support	水泵安装架	01332001	01332001	01332702	01332702	01332721	01332721	1

Table 8-7 continue

No	Description		Part No						Qty
			KF-50T/E1	KFR-50T/E1	KF-70T/B1	KFR-70T/B1	KF-120T/B	KFR-120T/B	
36	Water Level Switch	液位开关	45010201	45010201	45010201	45010201	45010201	45010201	1
37	Pump Drainpipe	水泵排水管(2P)	05232721	05232721	\	\	\	\	1
37	Pump Drainpipe	水泵排水管	\	\	05230026	05230026	05230026	05230026	1
38	Auxiliary Heater	辅助电加热部件	\	32002703	\	32002701	\	32007202	1
39	Right Side Plate	右侧板部件	01302710	01302710	\	\	\	\	1
39	Right Side Plate	右侧板部件	\	\	01302716	01302716	\	\	1
39	Right Side Plate	右侧板部件	\	\	\	\	01302712	01302712	1
40	Cable-cross Block	过线胶块	76512702	76512702	76512702	76512702	76512702	76512702	1
41	Pump Cover Board	水泵备用盖板部件	01252712	01252712	01252713	01252713	01252713	01252713	1
42	Bolt	螺栓	70212701	70212701	70212701	70212701	70212701	70212701	3
43	Remote Controller	英文遥控器	30512505	30512505	30512505	30512505	30512505	30512505	1

The data are subject to change without notice.

8.9.1 Explosive view of outdoor unit (for 50 model)

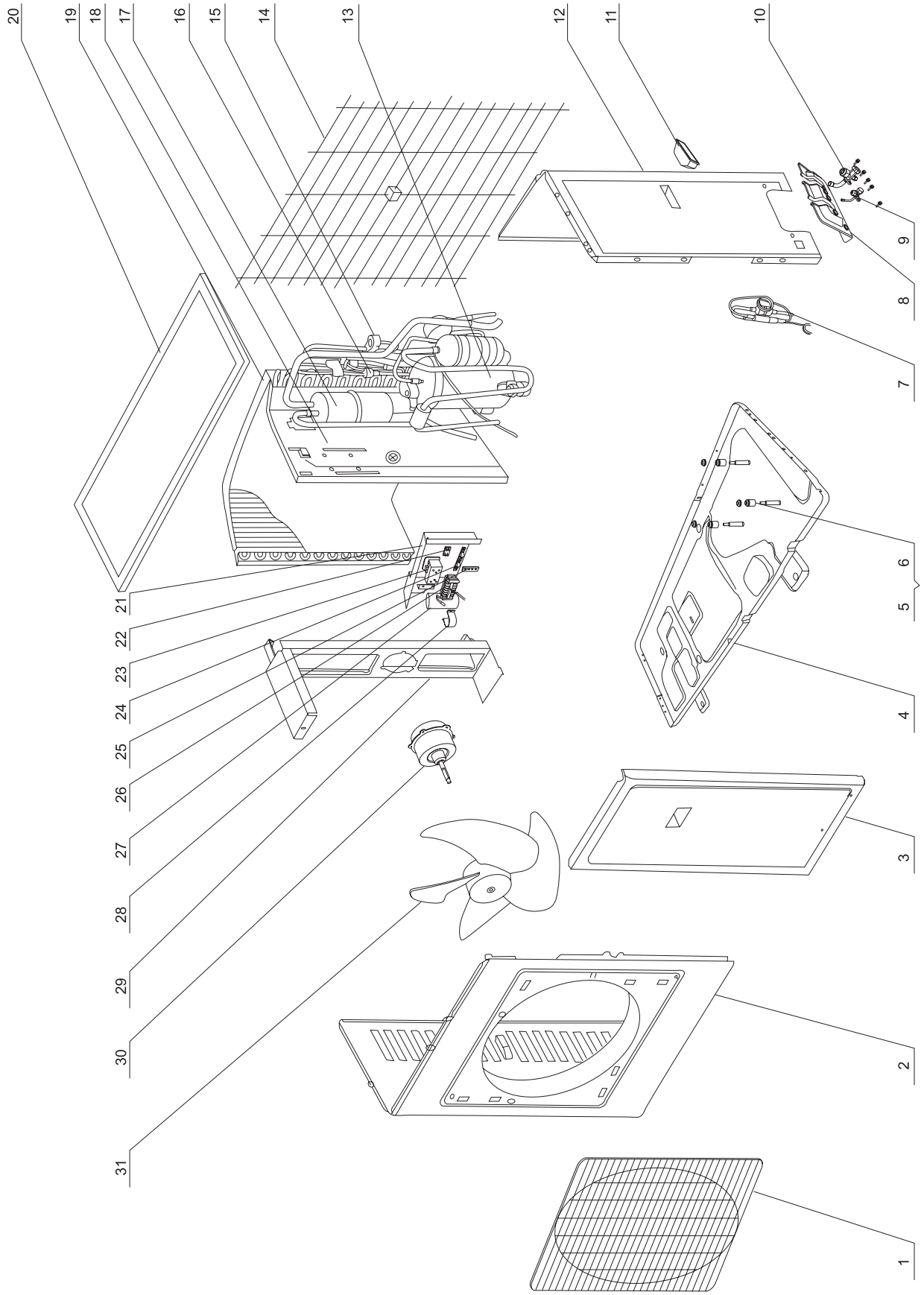

figure 8-8

8.9.2 Spare parts list of outdoor unit (for 50 model)

Table 8-8

No	Description		Part No				Qty
			KF-50W/tE1	KFR-50W/tE1	KF-50W/tE1N	KFR-50W/tE1N	
1	Front Grill	面罩	22265251	22265251	22265251	22265251	1
2	Front Plate	外罩	01433028	01433028	01433028	01433028	1
3	Front Side Plate	前侧板	01303023	01303023	01303023	01303023	1
4	Metal Base	底盘组件	01205031	01205011	01205011	01205011	1
5	Base Support	支脚	01795251	01795251	01795251	01795251	2
6	Nut with Washer M8	带垫螺母 M8	70310014	70310014	70310014	70310014	3
7	Capillary Assy	毛细管组件	03003706	03003706	03003706	03003706	1
8	Valve Support	阀门支架	01715256	01715256	01715256	01715256	1
9	Liquid Valve Assy	小阀门组件	07103702	07103702			1
9	Liquid Valve Assy	小阀门组件			07105002	07105002	1
10	Gas Valve Assy	大阀门组件	07105251	07105251			1
10	Gas Valve Assy	大阀门组件			07105007	07105007	1
11	Handle	把手	26235251	26235251	26235252	26235252	1
12	Rear Side Plate	后侧板	01305002	01305002	01305002	01305002	1
13	Compressor SHW33TC4-U	压缩机	00100131	00100131	\	\	1
13	Compressor C2RN170H5U	压缩机	\	\	00100075	00100075	1
14	Rear grill Assy	网罩	01473025	01473025	01473025	01473025	1
15	4 way Valve	四通阀组件	\	03023066	\	03023066	1
16	Silencer	消音器	07245007	07245007	07245007	07245007	1
17	Gas-liquid Separator	汽液分离器部件	07225001	07225001	07225001	07225001	1
18	Isolation Sheet Assy	中间隔板组件	01233022	01233022	01233022	01233022	1
19	Condenser Assy	冷凝器部件	01750001	01750001			1
	Condenser Assy	冷凝器部件			0 1103704	0 1103703	1
20	Top Cover Assy	顶盖	01255262	01255262	01255262	01255262	1
21	Electric Box	电器盒组件	01405001	01405001	01405001	01405001	1
22	Capacitor 3uF/450V	电容	33010021	33010021	33010021	33010021	1
23	Contactor	双极交流接触器	44010221	44010221	44010222	44010222	1
24	Wire Clamp	电线夹	71010102	71010102	71010102	71010102	2
25	Velometer	调速器 TS60	30024413	30024413	30024413	30024413	1
26	Terminal Board 2-8	2-8 接线板	42011103	42011103	42011103	42011103	1
27	Capacitor 50uF/450V	电容	33000001	33000001	\	\	1
	Capacitor 50uF/450V	电容	\	\	33000022	33000022	1
28	Capacitor Clamp	电容夹	02143442	02143442	02143442	02143442	1
29	Motor Support	电机支架组件	01703025	01703025	01703025	01703025	1
30	Motor FW60D	电机FW60B	15013701	15013701	\	\	1
	Motor FW60T	电机FW60T	15013703	15013703	\	\	1
31	Axial Flow Fan	轴流风叶	10335253	10335253	10335253	10335253	1

The data are subject to change without notice.

8.10.1 Explosive view for outdoor unit (For 70 model)

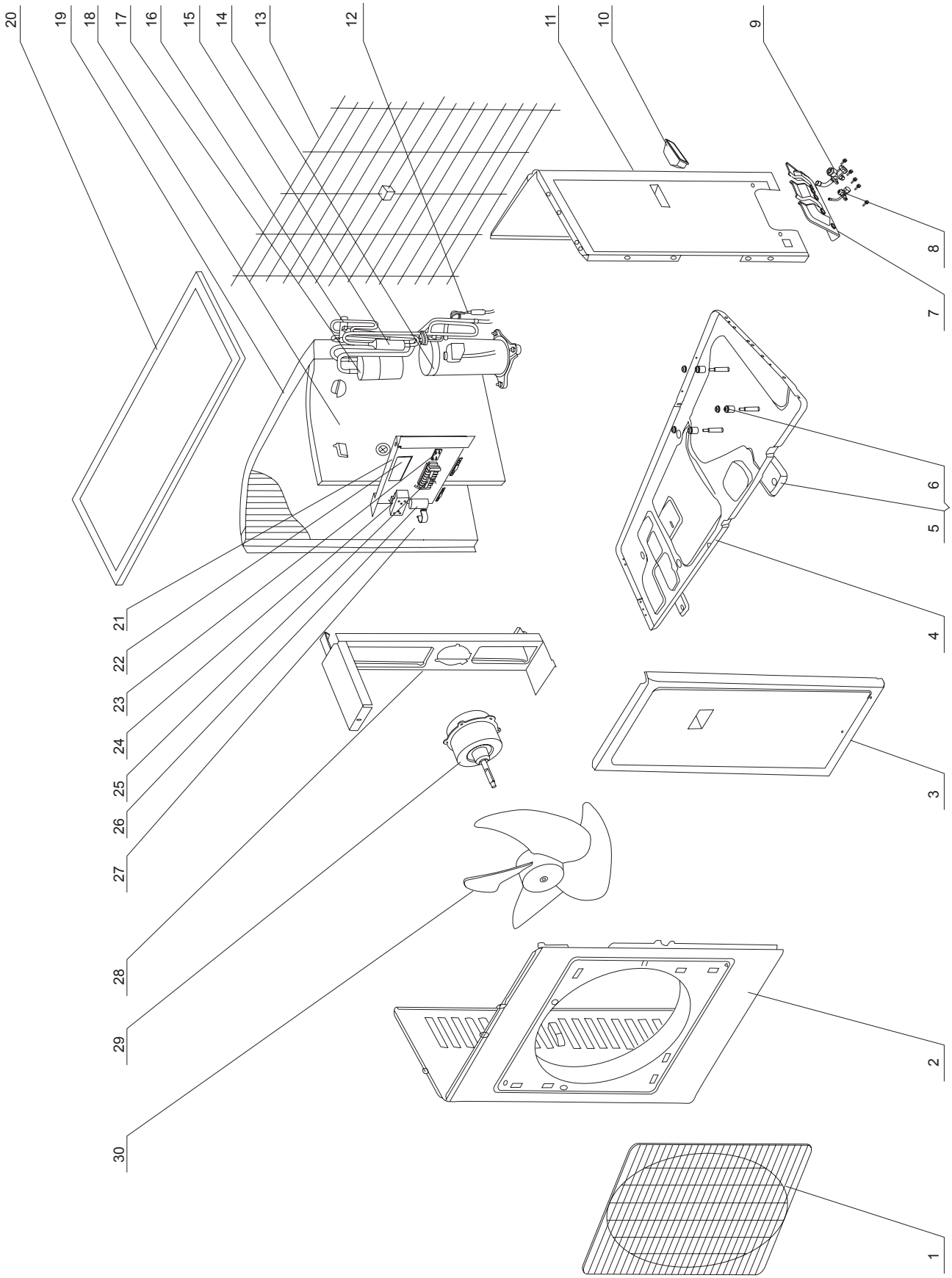

figure 8-9

8.10.2 Spare parts list of outdoor unit (For 70 model)

Table 8-9

No	Description		Part No				Qty
			KF-70W/tB1	KFR-70W/tB1	KF-70W/tB1N	KFR-70W/tB1N	
1	Front Grill	面罩	22265251	22265251	22265251	22265251	1
2	Front Plate	外罩	01435251	01435251	01435251	01435251	1
3	Front Side Plate	前侧板	01305251	01305251	01305251	01305251	1
4	Metal Base	底盘组件	01205011	01205011	01205011	01205011	1
5	Base Support	支脚	01795251	01795251	01795251	01795251	2
6	Nut with Washer M8	带垫螺母 M8	70310014	70310014	70310014	70310014	3
7	Valve Support	阀门支架	01715256	01715256	01715256	01715256	1
8	Liquid Valve Assy	小阀门组件	07103702	07103702			1
8	Liquid Valve Assy	小阀门组件			07105002	07105002	1
9	Gas Valve Assy	大阀门组件	07105251	07105251			1
9	Gas Valve Assy	大阀门组件			07105007	07105007	1
10	Handle	把手	26235252	26235252	26235252	26235252	1
11	Rear Side Plate	后侧板	01305261	01305261	01305261	01305261	1
12	Capillary Assy	毛细管组件	03003710	03003710	03003701	03003701	1
13	Rear grill Assy	网罩	01475251	01475251	01475251	01475251	1
14	Compressor	压缩机 AVA5535EXG	00100503	00100503	\	\	1
14	Compressor	压缩机C-RN220H5B	\	\	00100063	00100063	1
15	Silencer	消音器	07245201	07245201	07245005	07245005	1
16	4 way Valve	四通阀组件	03025202	03025202	03025202	03025202	1
17	Gas-liquid Separator	汽液分离器部件	07255251	07255251	07255251	07255251	1
18	Isolation Sheet Assy	中间隔板组件	01235252	01235252	01235252	01235252	1
19	Condenser Assy	冷凝器部件	01105031	01105031			1
	Condenser Assy	冷凝器部件			0 1103707	0 1103707	1
20	Top Cover Assy	顶盖	01255261	01255261	01255261	01255261	1
21	Electric Box	电器盒组件	1405106	1405106	1405106	1405106	1
22	Velometer	调速器 TS60	30024413	30024413	30024413	30024413	1
23	Capacitor 3uF/450V	电容	33010021	33010021	33010021	33010021	1
24	AC Contactor	双极交流接触器	44010221	44010221	44010222	44010222	1
25	Terminal Board 2-8	2-8 接线板	42011103	42011103	42011103	42011103	1
26	Capacitor 40uF	电容CBB65	33000022	33000022	33000022	33000022	1
27	Capacitor Clamp	电容夹	02143441	02143441	02143441	02143441	1
28	Motor Support	电机支架组件	01705251	01705251	01705251	01705251	1
29	Motor FW60D	电机FW60D	\	\	15013702	15013702	1
29	Motor FW60T	电机FW60T	15013702	15013703	\	15013703	1
30	Axial Flow Fan	轴流风叶	10335255	10335255	10335255	10335255	1

The data are subject to change without notice.

8.11.1 Explosive view of outdoor unit (For 120 model)

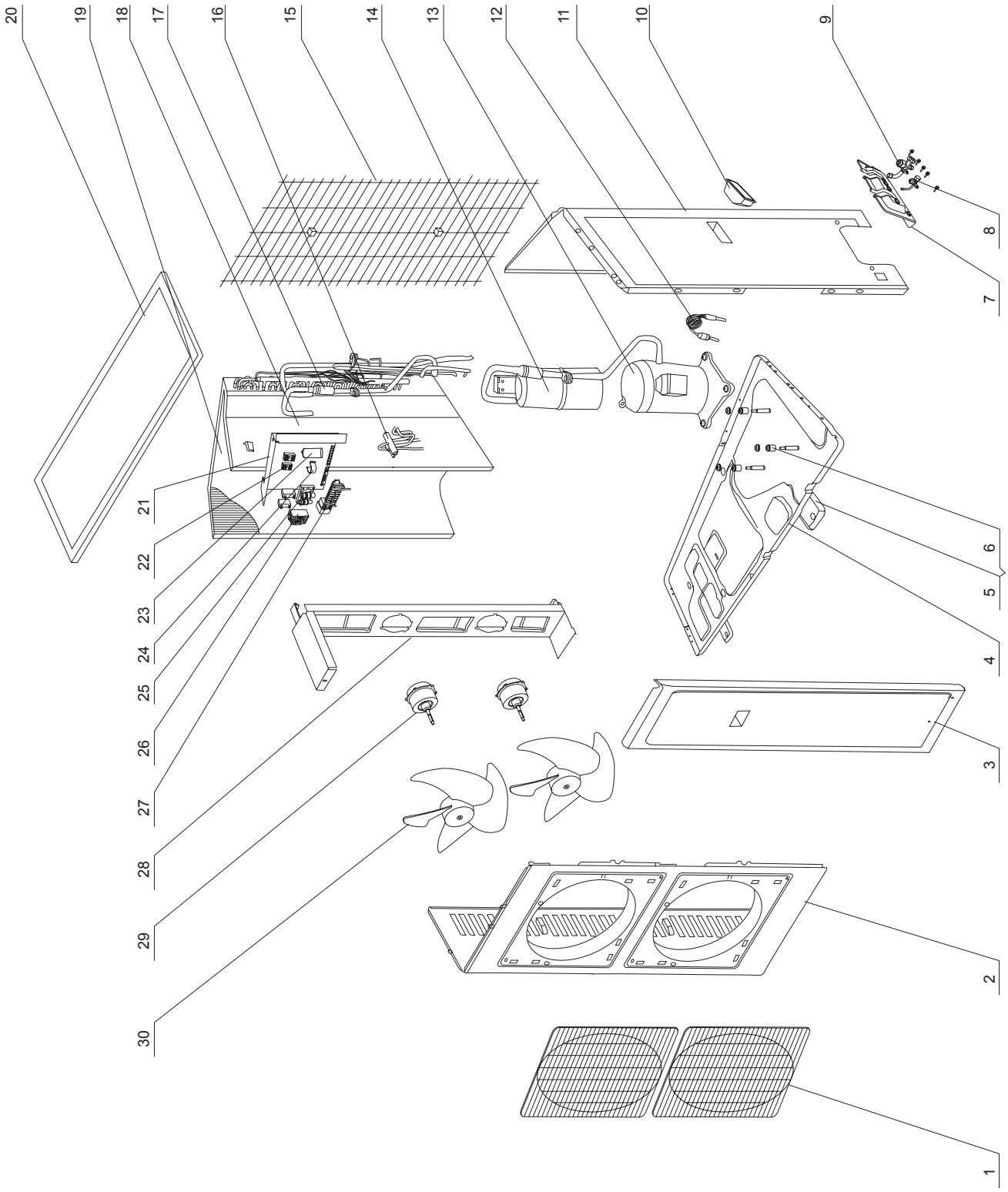

figure 8-10

8.11.2 Spare parts of outdoor unit (For 120 model)

Table 8-11

No	Description		Part No				Qty
			KF-120W/tB	KFR-120W/tB	KF-120W/tBN	KFR-120W/tBN	
1	Front Grill	面罩	22265251	22265251	22265251	22265251	2
2	Front Plate	外罩	01435432	01435432	01435432	01435432	1
3	Front Side Plate	前侧板	01305437	01305437	01305437	01305437	1
4	Metal Base	底盘组件	01205432	01205432	01205432	01205432	1
5	Base Support	支脚	01795251	01795251	01795251	01795251	2
6	Nut with Washer M8	带垫螺母 M8	70310014	70310014	70310014	70310014	3
7	Valve Support	阀门支架	01715256	01715256	01715256	01715256	1
8	Liquid Valve Assy	小阀门组件	07135431	07135431			1
8	Liquid Valve Assy	小阀门组件			07103704	07103704	1
9	Gas Valve Assy	大阀门组件	07105435	07105435			1
9	Gas Valve Assy	大阀门组件			07103703	07103703	1
10	Handle	把手	26235252	26235252	26235252	26235252	1
11	Rear Side Plate	后侧板	01305440	01305440	01305440	01305440	1
12	Capillary Assy	毛细管组件	03003710	03003710	03003714	03003713	1
13	Compressor AGC5561EXG	压缩机	00100502	00100502	\	\	1
	Compressor C-SBN373H8A	压缩机	\	\	00100332	00100332	1
14	Gas-liquid Separator	汽液分离器部件	07225433	07225433	07225433	07225433	1
15	Rear Grill Assy	网罩	01475431	01475431	01475431	01475431	1
16	4 way Valve	四通阀组件	\	03025441	\	03025441	1
17	Silencer	消音器	07245005	07245434	07245005	07245434	1
18	Isolation Sheet Assy	中间隔板组件	01235441	01235441	01235441	01235441	1
19	Condenser Assy	冷凝器部件	03003709	03003709			1
	Condenser Assy	冷凝器部件			01103709	03003710	1
20	Top cover Assy	顶盖	01255261	01255261	01255261	01255261	1
21	Electric Box	电器盒组件	01415205	01415205	01415205	01415205	1
22	Capacitor	电容 3.5uF/450VAC	33010010	33010010	33010010	33010010	2
23	Capacitor	电容50uF/450V	33010710	33010710	33010710	33010710	1
24	Terminal Board	接线板 T5A0A-94	\	42011223	\	42011223	1
	Terminal Board	接线板 GT8FOA1	42011036	\	42011224	\	1
25	Velometer	调速器 TS60	\	30024413	\	30024413	1
26	AC Contactor	双极交流接触器	44010211	44010211	44010211	44010211	1
27	Terminal Board 2-8	2-8 接线板	42011103	42011103	42011103	42011103	1
28	Motor Support	电机支架组件	01705433	01705433	01705433	01705433	1
29	Motor	电机FW60T	15013302	15013302	\	\	2
	Motor	电机FW68D	\	\	15013303	15013303	2
30	Axial Flow Fan	轴流风叶	10335253	10335253	10335253	10335253	2

The data are subject to change without notice.

8.12 Installation guide.

Location

1.Do not place object near the air oulet so that conditioned air can reach the whole room.
2.Be sure to install the indoor unit firmly and horizontly.
3.Select the place that can support 4 times of the indoor unit's weight and will not increase noise and vibration.
4.Select a place easy to drain water and connect with the outdoor unit.
5.Make sure there is enough space for maintenance and make sure the distance between the unit and ground is 1.8m or more.
6.Make sure the suspension bolt pitch can hold 4 times of the indoor units's weight,otherwise,you should strengthen the suspension bolt pitch.

Note:

1.Keep enough distance from the kitchen.
2.The appliance shall not installed in the lundary

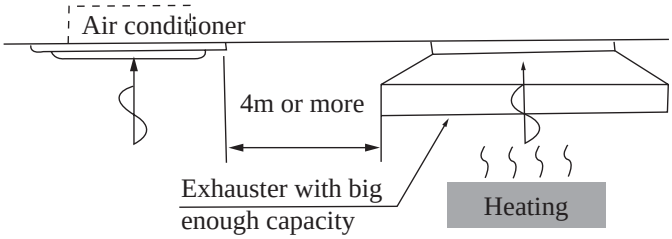

Ceiling opening and suspension bolt (M10) pitch demension.

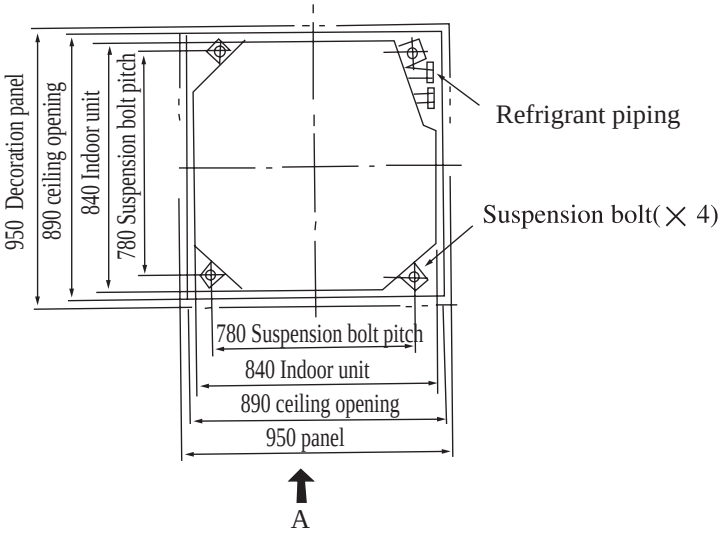

* Drilling of ceiling must be done by qualifiedpersonnel.

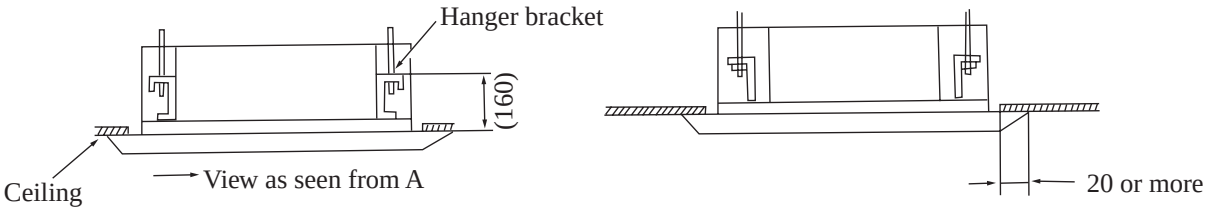

Note

Installation is possible with a ceiling dimension of 890 (marked with * can be 910), but the ceiling-panel overlapping dimension must be 20mm or more.

Indoor unit installation

1.Install the indoor unit temporarily.

- Attach the hanger bracket to the suspension bolt.Be sure to fix it securely by using a nut and washer from the upper and lower sides of the hanger bracket.the washer fixing plate ⑦ will prevent the washer from falling.
- Refer to the paper pad for installation ⑤ for ceiling opening demension.
- The center of the ceiling is indicated on the paper pad for installation,the center of the unit is indicated on the label attached to the unit and on the paper pad for installation.
- Fix the paper pad to the unit with screws ⑥ (×3)

2.Refer to diagram 3, adjust the unit.to the right position for installation.

3.Check if the unit is horizontally level.

- The indoor unit is equipped with a built-in drainage pump and float switch.at each of the unit's 4 corners,verify that it is level by using a water level or a water filled vinyl tube.(If the unit is tilted against condensate flow,the float switch my malfunction and cause water to drip.)

4.Remove the washer fixing plate ⑦ used for preventing the washer from falling and tighten the upper nut.

5.Remove the paper pad for installation ⑤.

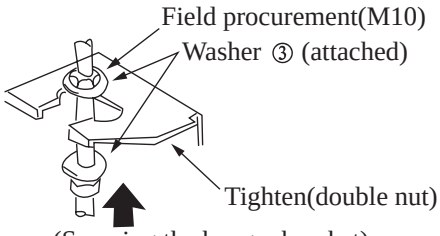

(Securing the hanger bracket)

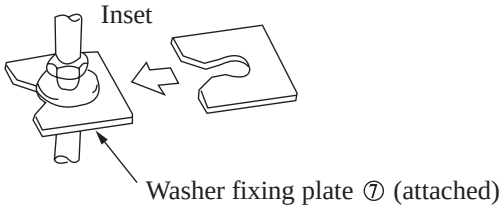

(Securing the hanger bracket)

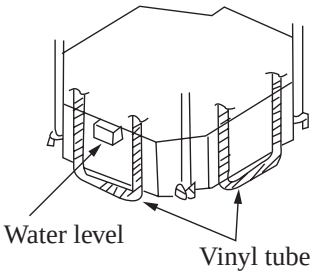

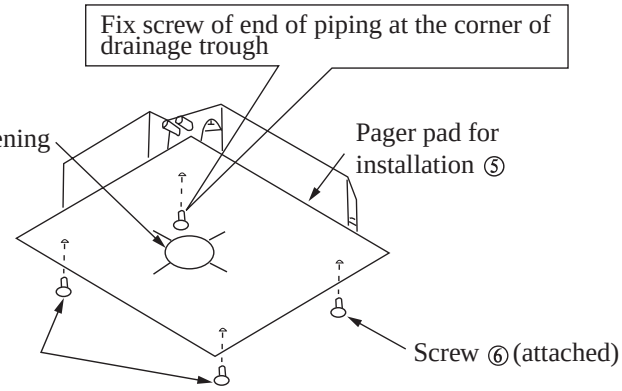

Fix paper pad for installation

Warning	Tighten the nut to prevent the unit from falling.

Connection of refrigerant pipe

- Besure to use both a spanner and torque wrench together as shown in the drawing,connecting or disconnecting pipes to/from the unit.
- Refer to table 1 to determine the proper tightening torque (over tightening may damage the flare and cause leaks.)
- When conecting the flare nut,coat the flare both inside and outside with refrigerating machine oil and initially tighten by hand 3 or 4 turns.
- Check the pipe connector for gas leaks,then insulate it as shown in the drawing below.
- Use sealing pad (11) to wrap joint between gas pipe and the insulation(8).

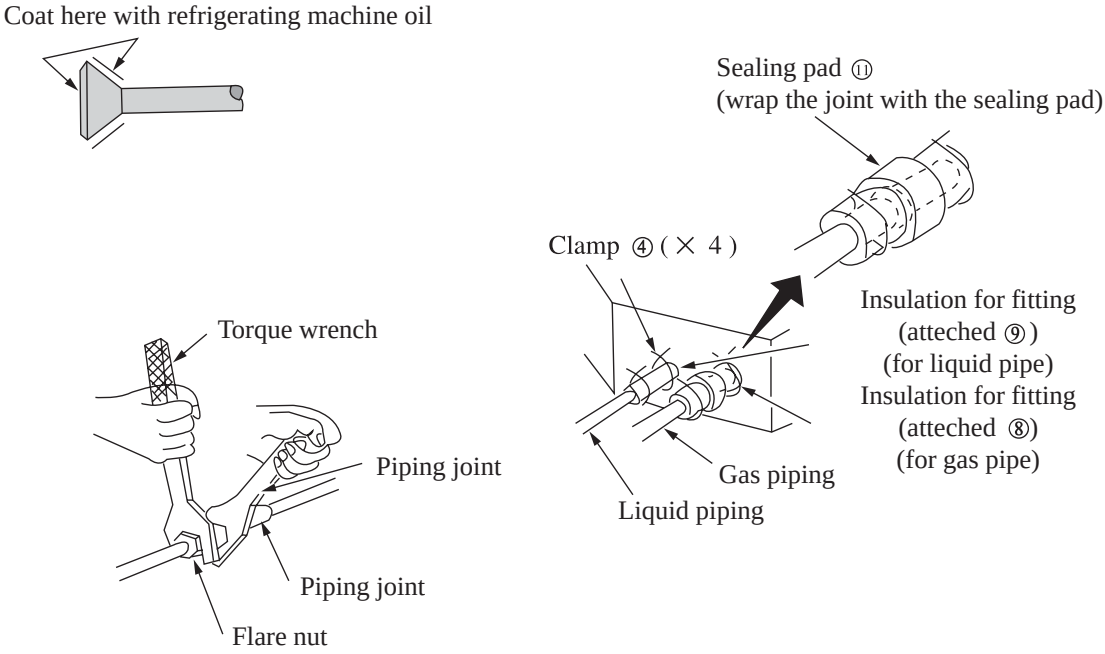

Table 1

Pipe gauge	Tightening torque	Notes	
Φ 9.52	30～40N.m	KF(R)-50TW/E1	Add 30g
Φ 16	60～65N.m	KF(R)-70TW/B	Add 30g
Φ 12	45～50N.m	KF(R)-70TW/B1	Add 30g
Φ 19	70～75N.m	KF(R)-120TW/B	Add 30g

The maximun leagth for refrigerant peping is 25 meters,when the length exceeds 10 meters,you should charge additonal (refrigerant as shown in following for per-meter added).

Drainage pipe

1.Installation of drainage pipe.

- The diameter of the drainage pipe should be greater than of equal to the diameter of the connecting pipe[vinyl tube, pipe size:25mm(outer dimension)]
- Keep the drainage pipe short and sloping downwards at a gradient of at least 1/100 to prevent air pockets from forming.
- If the drainage hose cannot be sufficiently set on a slope,add a drainage raising pipe.
- To keep the drainage hose from sagging,keep space between hanging hooks at 1～1.5m.

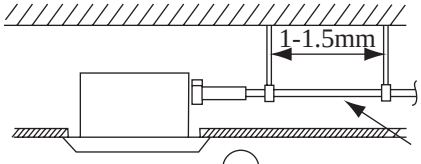

Right ○ 1/100 Gradient or more

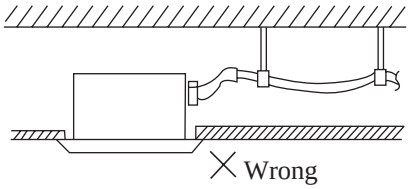

× Wrong

- Use the attached drainage hose ① and clamp ② .Insert the drainage hose into the drainage socket up to the grey tape.Tighten the clamp until the screw head is less than 4 mm from the hose.
- Wrap the big sealing pad around clamp of the drainage hose to insulate.
- Insulate the drainage hose inside the room.

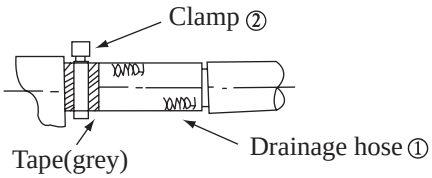

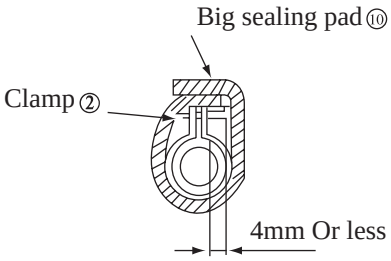

Precoutions for drainage raising pipe

- Install the drainage raising pipe at a height of less than 280 mm.
- Install the drainage raising pipe at a right angle to the indoor unit and no more than 300 mm from the unit.

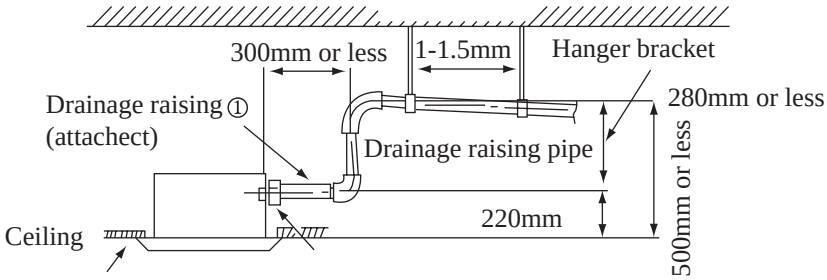

Note

- The incline of attached drain hose ①should be 75mm or les, so that the drainage socket does not have to stand additional force.
- If converging multiple drainage pipes,install according to the procedure shown below.

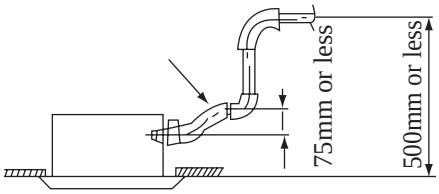

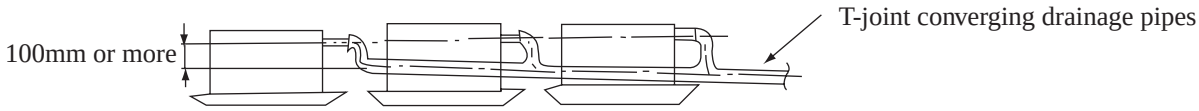

Select converging drainage pipes whose gauge is suitable for the operating capacity of the unit.

2.After finishing installation,check if drainage water flows smoothly.

- Add approximately 600 cc of water to the drainage trough through air outlet or inspection hole slowly and check drainage flow.
- When electric wiring is finished,check drainage flow during cooling operation.

Method of adding water.

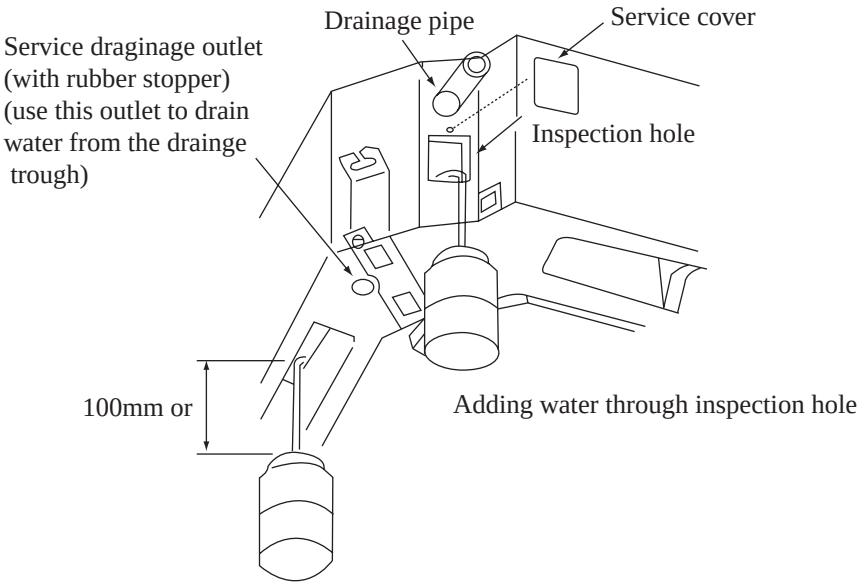

Warning:Befone obtaining access to terminals, all supply circuits must be disconnected.

Electric wiring

- All field supplied parts and meterials must conform to local laws and regulations.
- For electric wiring,refer to " WIRING DIAGRAM "attached to the unit body.
- All wiring must be performed by a skilled technician.
- A circuit breaker capable of shutting down power supply to the entire system and with at least 3 mm contact seperation must be installed.
- Earth properly.
- Wiring must conform to national laws and regulations.
- Installing the protector with not more than 30mA leakage current is a must.
- If the supply cord is damaged, it must be replaced by the manufactory or its service agents or a similarty qualified person in order to avoid a hazard.

Wiring of unit and the controller

- Wiring of the indoor unit.
- Remove the control box lid(1),pull the wires inside through rubber bush Ⅰ and wiring according to the " WIRING DIAGRAM ",then tighten it with clamp.
- Wiring of the controller.
- Remove the control box lid(2),pull wires inside through rubber bush Ⅱ and connect to the controller.
- Wrap the wire with sealing pad(12).
- After wiring,tighten it with clamp and fix the control box lid(1),(2).
- Heating and cooling:connect the rubber wire (5-cords) to the power supply terminal board in properly.
- Cooling:connect the rubber wire (3-cords) to the power supply termiral board properly.

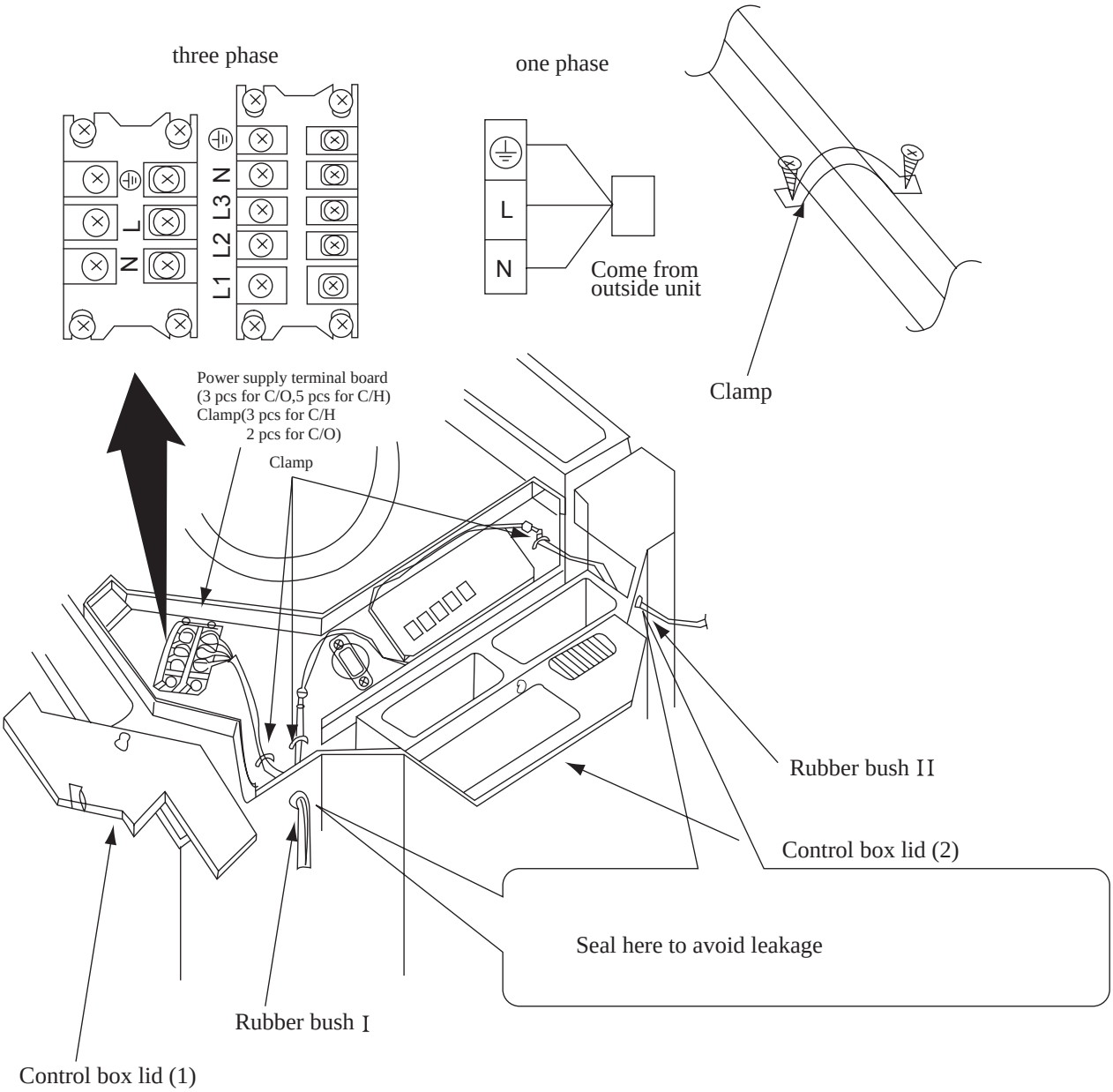

Precautions:Be sure to connect the indoor unit and outdoor unit at right poles.

Installation of panel

1.Set the panel to the indoor unit body by matching the position of the swing flap motor of the decoration panel to the piping position of the panel to the piping position of the indoor unit as shown in fig.4.

2.Install the decoration panel

(1) Hang the latch,which is located on the opposite side of the swing flap motor on the panel,temporarily to the book of the indoor unit. (2 Positions)

(2) Temporarily hang the remaining 2 latches to the hooks on the sides of the indoor unit.(be careful not to let the swing motor lead wire get caught in the sealing material.)

(3) Screw all 4 hexagon head screws located right beneath the latches in approximately 15mm.(panel will rise)

(4) Adjust the panel by turning it to the arrowed direction in Fig.4 so that the ceiling opening is completely covered.

(5) Tighten the screws until the thickness of the sealing material between the panel and the indoor unit body is reduced to 5～8 mm.

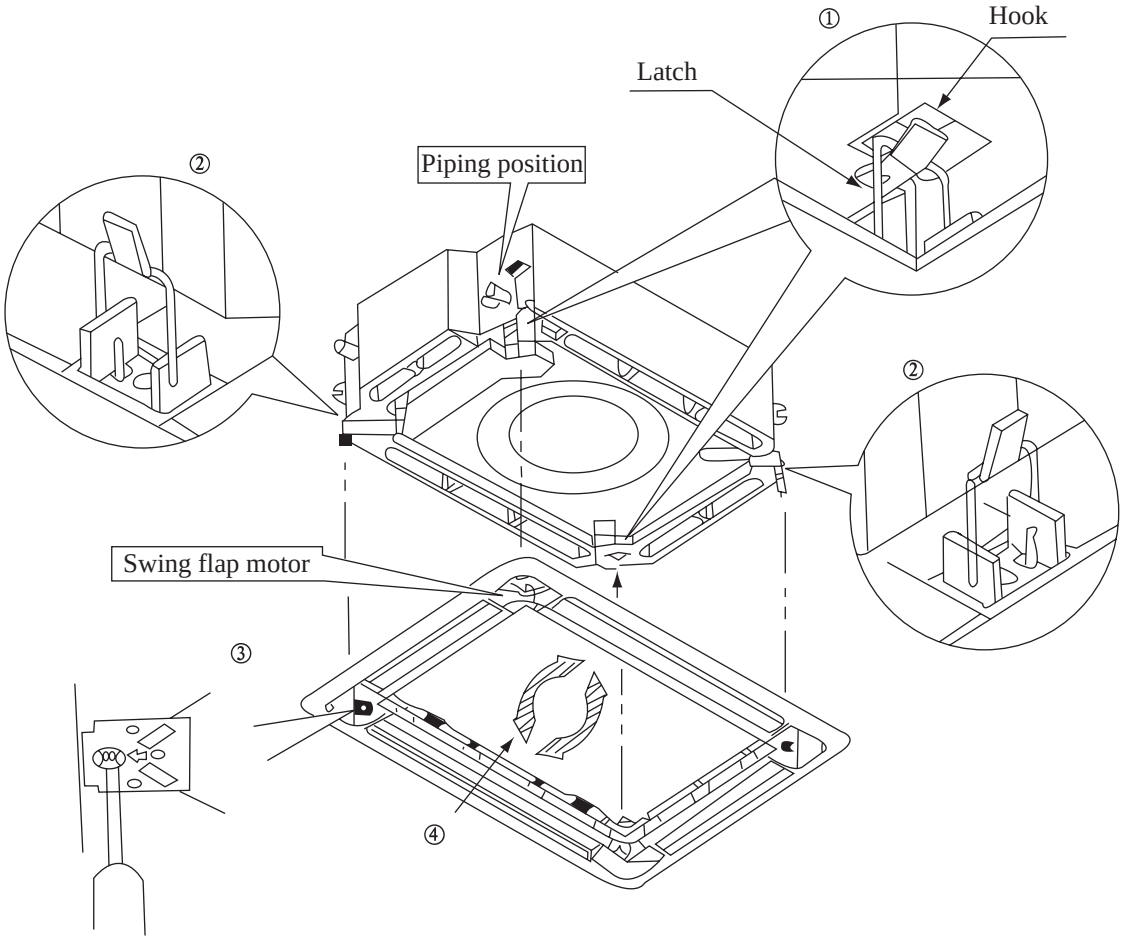

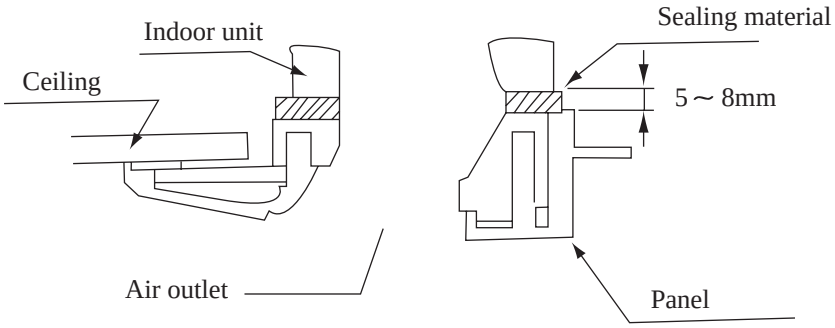

(Fig.4)

Precautions

1.Improper screwing of the screws may cause the troubles shown in Fig.5.

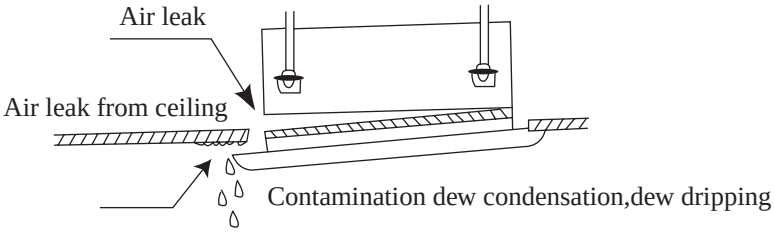

(Fig.5)

2.If gap is still left between the celling and the panel after screwing the screws,readjust height of the indoor unit body(Refer to Fig.6).

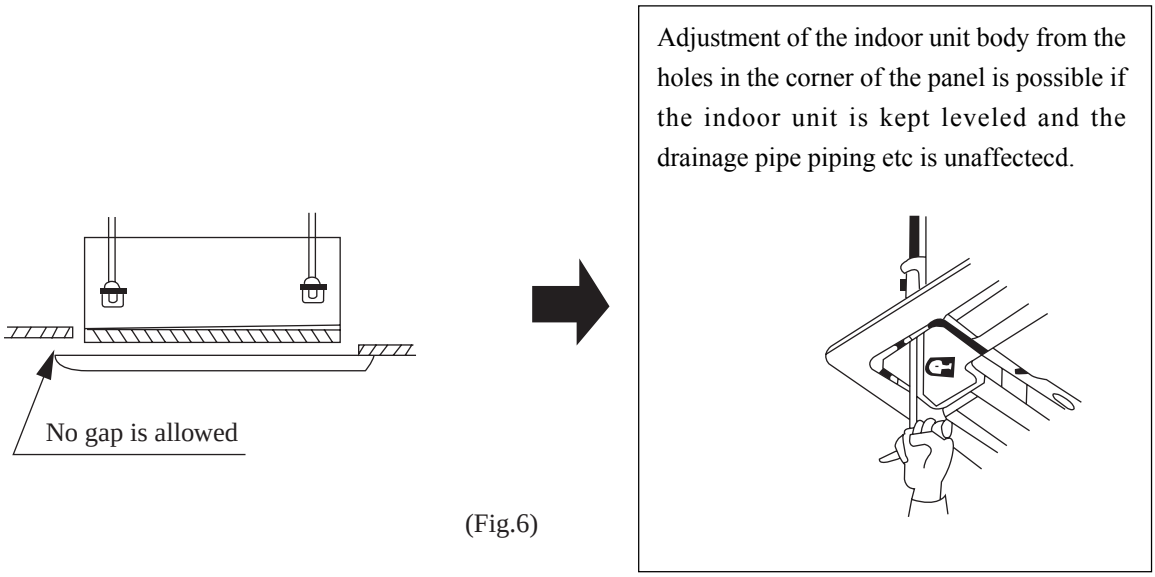

(Fig.6)

∗ After fixing,be sure no gap left between the ceiling and the panel.

3.Wiring of the decoration panel.

⑥ Connect te joints for swing flap motor lead wire(at 2 places) installed on the panel (Refer to Fig.7).

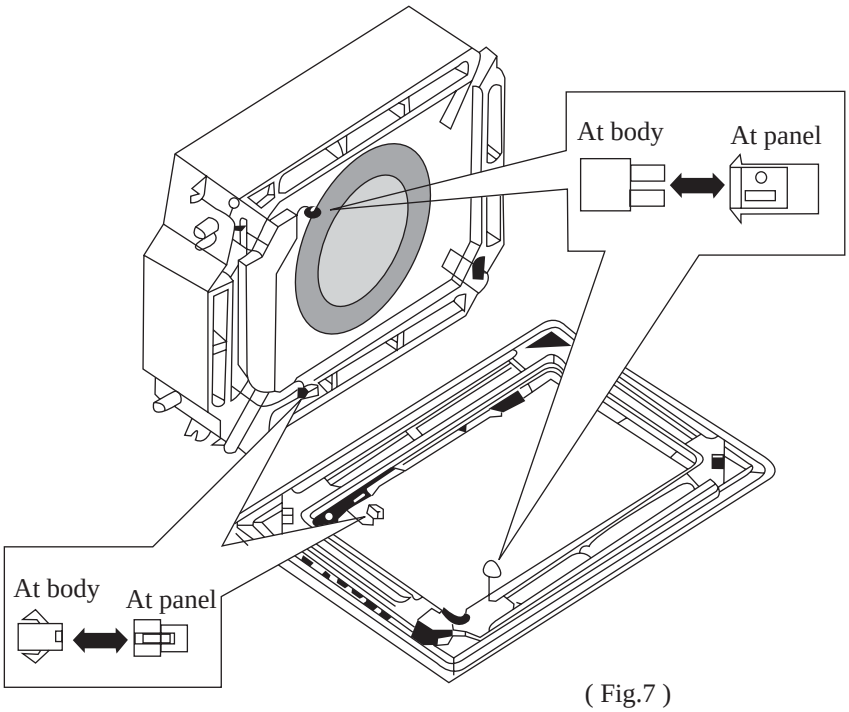

(Fig.7)

Selecting installation site

- Select an installation site where the folliwing conditions are satisfied and that meets with your customer's approval.
- Places which are well-ventilated.
- Safe places which can withstand the unit ' s weight and vibration and where the unit can be installed level.
- Places where the unit does not bother next-door neighbors.
- Places where there is no possibility of flammable gas leak.
- Places where things distressed in water do not exist because water drains off the outdoor unit.
- Places where servicing space can be well ensured.
- Places where strong wind can not blow directly to outdoor unit.

Outdoor unit installation

1. Install the unit firmly with combination of M10 or more bolts and nuts on the foundation that can fully support the weight of the unit.and make sure the unit stand vertically.
2. Do not installing the unit on the top of building.
3. If there is noise caused by vibration add rubber between the unit and the foundation, Please.
4. When the air conditioner is heating or defrosting,drain water of the outdoor unit to an appropriate place with the drain hose.
5. Fixing mothod:Fix the outdoor drainage hose head in the hole of the chassis,then connect the drainage hose with the mouth of drainage pipe.

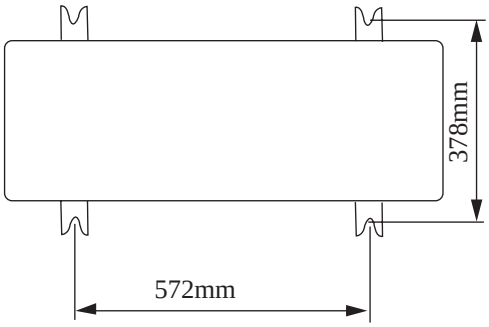

(Fig.8)

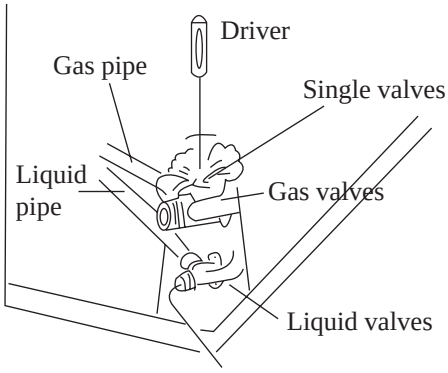

(Fig.9)

Connecting the pipe.

1. Remove the flare nuts of the valves.
2. Match the piping center,tighten the flare nuts with hand.
3. Tightening the flare nuts with a driver.
4. Romove the nuts of one-way valve.
5. Loosen the valve spindle with a hexogen wrench and press the needle to let gas out.
6. Affter 15 seconds when refrigerant gas leaks out,turn off the valve and fighten the nuts.
7. Fully open valves.(Fig.9)
8. Tighten the nuts,then check whether there is gas leaking out.

* If possible,evacuate from the one-way valve with a vaccum pump.(Fig.10)

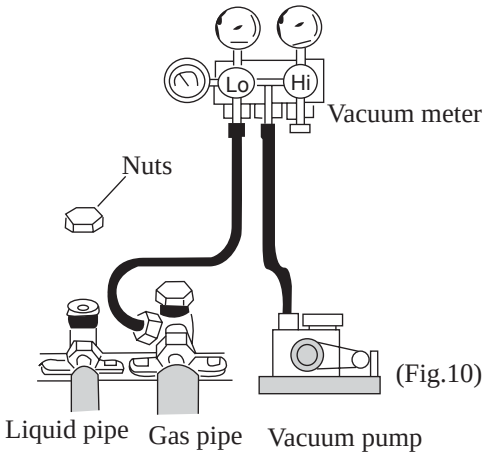

(Fig.10)

Electric wiring

(1) Read the name plate carefully,then arrange wiring according to the “WIRING DIAGRAM ”
(2) A circuit breaker capable of shutting down power supply to the entire system must be installed.
(3) Earth properly.
(4) All wiring must be perfomed by a skilled electrican according to the “ WIRING DIAGRAM ”.Wrong wiring may cause fire of electric shock.

Connect the power connecting wires

(1) Remove the front side plate (Fig.11).
(2) Break through the hole for wires and put on rubber bush.
(3) Pull all wires through the rubber bush.
(4) Connect the outdoor unit according to the “WIRING DIAGAM” of outdoor unit.Make sure to wire firmly.
(5) Tighten the wires with clamp and clasp.

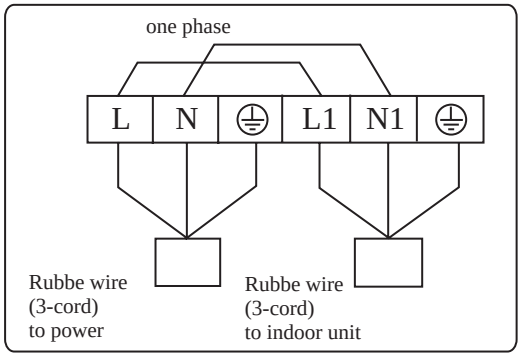

Note

(1) Earth the units firmly.
(2) Wire the units firmly.
(3) Don’t pull the connector too forcefully.
(4) For cooling only type:
Connect the rubber wire (3-cords) to L.N1⏚ of the power supply terminal board (8p) and the rubber wire (5-cords) to L1,L2,L3,N ⏚, of the power supply terminal board (8p) accordingly.

For cooling/heating type: Connect the rubber wire (5-cords)to the power supply terminal coard (5p) properly.

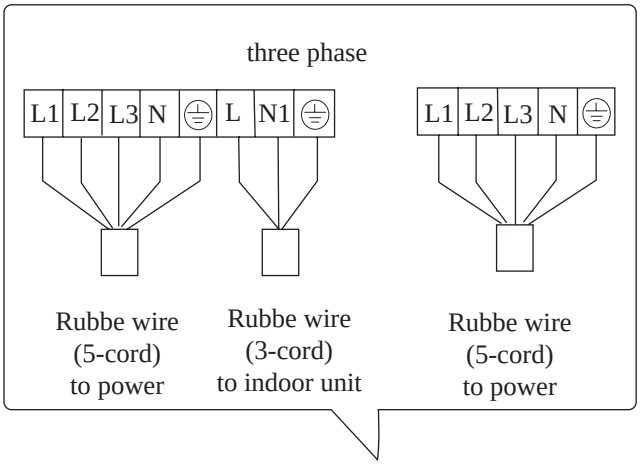

(5) Connect the other wires porperly.
- Do not pull the wire when fixing it with wire clamp and clasp.
- Do not let the wire too loose in the outdoor unit.

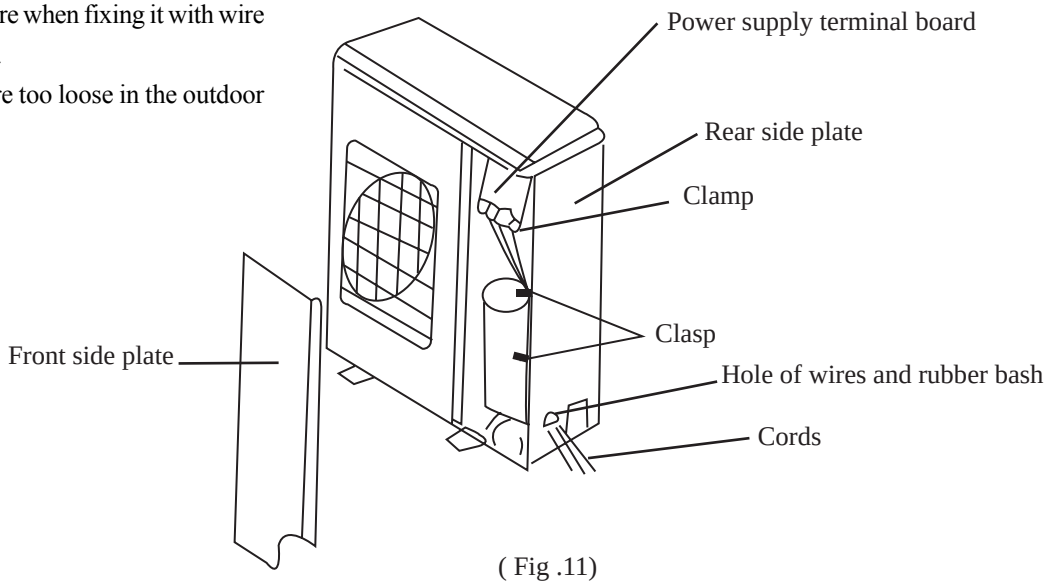

(Fig .11)

Test operation

1. Prepare for test
(1) Do not turn on the power switch before all installation is finsihed.
(2) Connect wires corectly and firmly.
(3) Open the check valve.
(4) Remove all dust.
2. Testing
(1) Turn on the power switch and press “1/0” button.
(2) Press “MODE”button select COOL,HEAT,FAN,etc to test whether it operates mormally.
3.Emergency operation.
When the batteries fail or when the remote controller is missing,operate as shown below.
∗ On stopping you can press the “AUTO”button on cover NO. Ⅱ unitl it is in “AUTO” mode.
The air conditioner select from COOL,HEAT,DRY,FAN modes automatically.
∗ On operating,press the “AUTO”button,the air conditioner will stop.

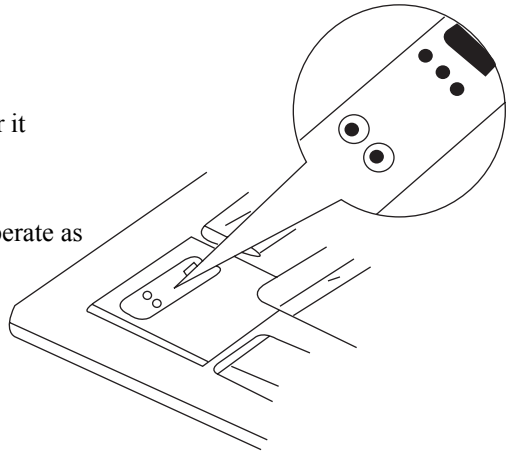

Note	The“TEST”button on the cover No.Ⅱ is specially for testing the air conditioner. When pressing it,the air conditioner will be forced to operate or stop.Do not press it when air conditioner is in normal operation.

For the following items,take special care during construction and check after installation is finished.

Items to check	If not properly done,what is likely to happen	Check
Is the indoor unit fixed firmly?	The unit may drop,vibrate or make noise.	
Is the gas leak test finished?	It may result in insufficient cooling.	
Is the unit fully insulated?	Condensate water may drip.	
Does drainage flow smoothly?	Condensate water may drip.	
Does the power supply voltage correspond to that shown on the nameplate	The unit may malfunction or the components burn out.	
Are wiring and piping correct?	The unit may malfunction or the components burn out.	
Is the unit safely grounded?	Risk of electric leakage.	
Is wiring size according to specifications?	The unit may malfunction or the components burn out.	
Is something blocking the air outlet or intake of either the indoor or outdoor units?	It may result insufficient cooling.	
Have records of refrigerant piping length and additional refrigerant charge been made?	Volume of refrigerant charge in the system is not clear.	

Note to the installer

Be sure to instruct the customer how to operate the system and show him/her the attached operation manual.

8.13 Circuit diagram

These circuit diagrams are subject to change without notice.
Please refer to the ones stuck on the machines.

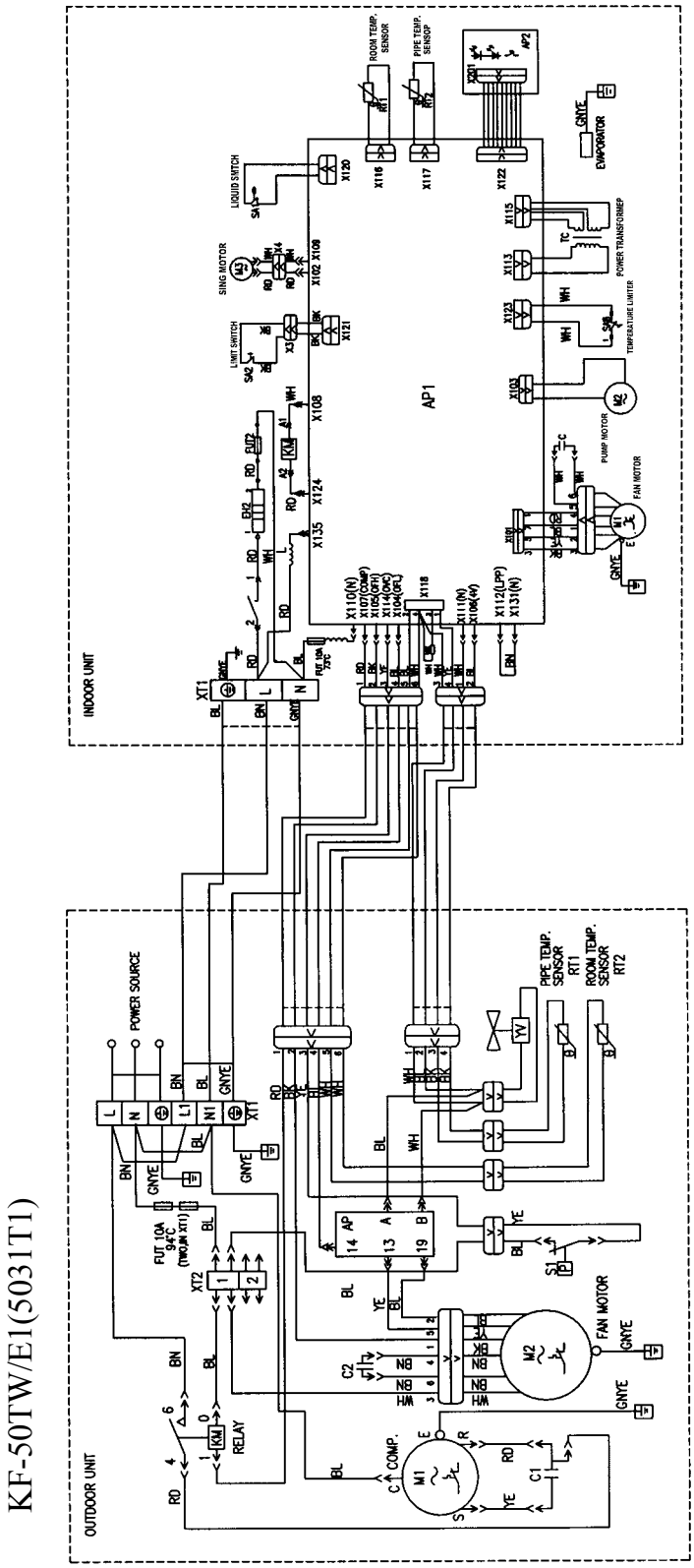

figure 8-11

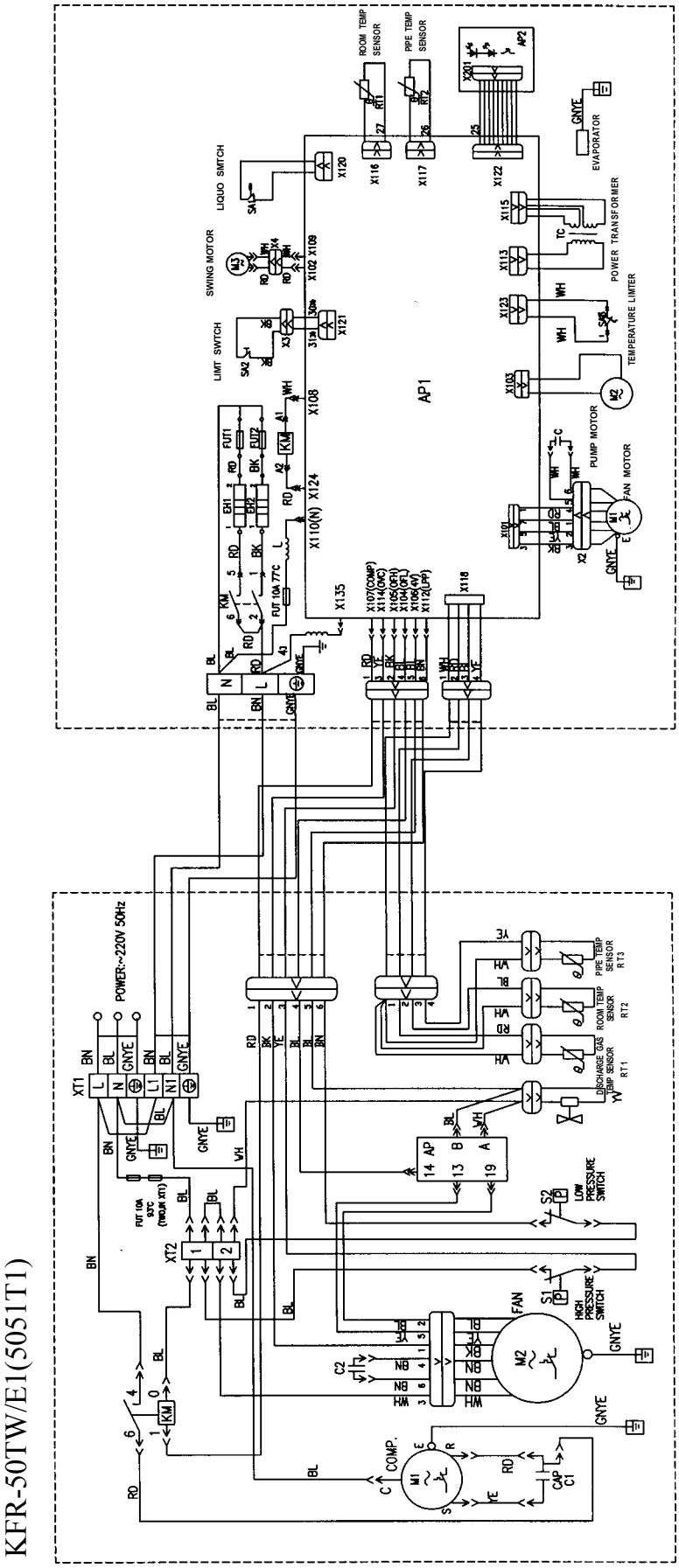
KFR-50TW/E1(5051T1)
POWER:~220V 50Hz
XT1
XT2
COMP.
M1
M2
FAN
CAP
C1
C2
S1
HIGH PRESSURE SWITCH
S2
LOW PRESSURE SWITCH
14 AP
DISCHARGE GAS TEMP SENSOR RT1
ROOM TEMP SENSOR RT2
PIPE TEMP SENSOR RT3
AP1
AP2
X201
X116
X117
X122
X115
X113
X123
X103
X120
X121
X102 X109
X108
X124
X110(N)
X135
X118
X107(COMP)
X114(OHC)
X105(OFH)
X104(AF)
X106(AV)
X112(LPF)
ROOM TEMP SENSOR
PIPE TEMP SENSOR
LIQUID SWITCH
SWING MOTOR
LIMIT SWITCH
EVAPORATOR
POWER TRANSFORMER
TEMPERATURE LIMITER
PUMP MOTOR
FAN MOTOR
FUT1
FUT2
FUT 10A 77C
FUT 10A 83°C (TRIGGER 77°C)
KM
GNYE

figure 8-12

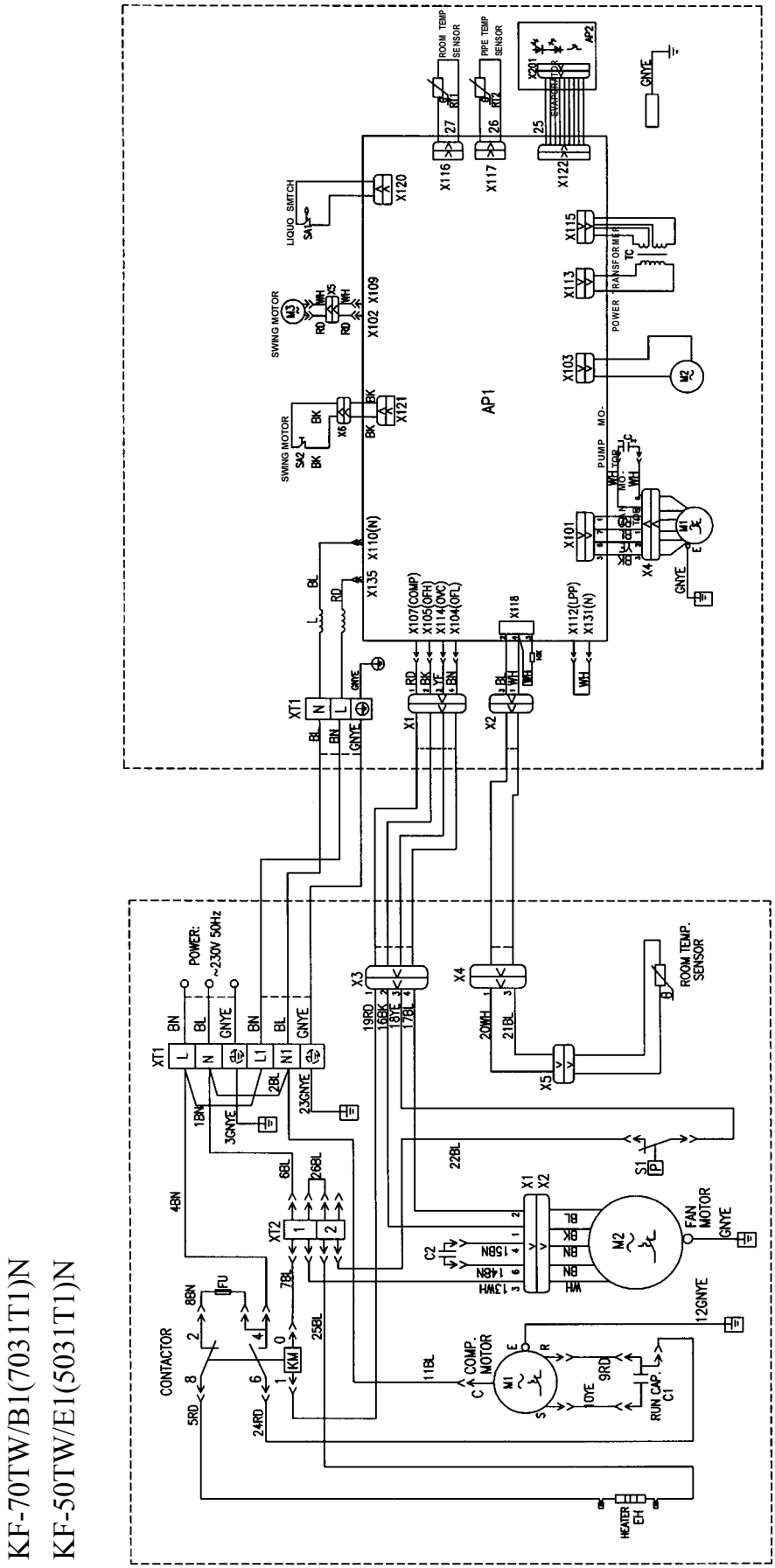

KF-70TW/B1(7031T1)N
KF-50TW/E1(5031T1)N

figure 8-13

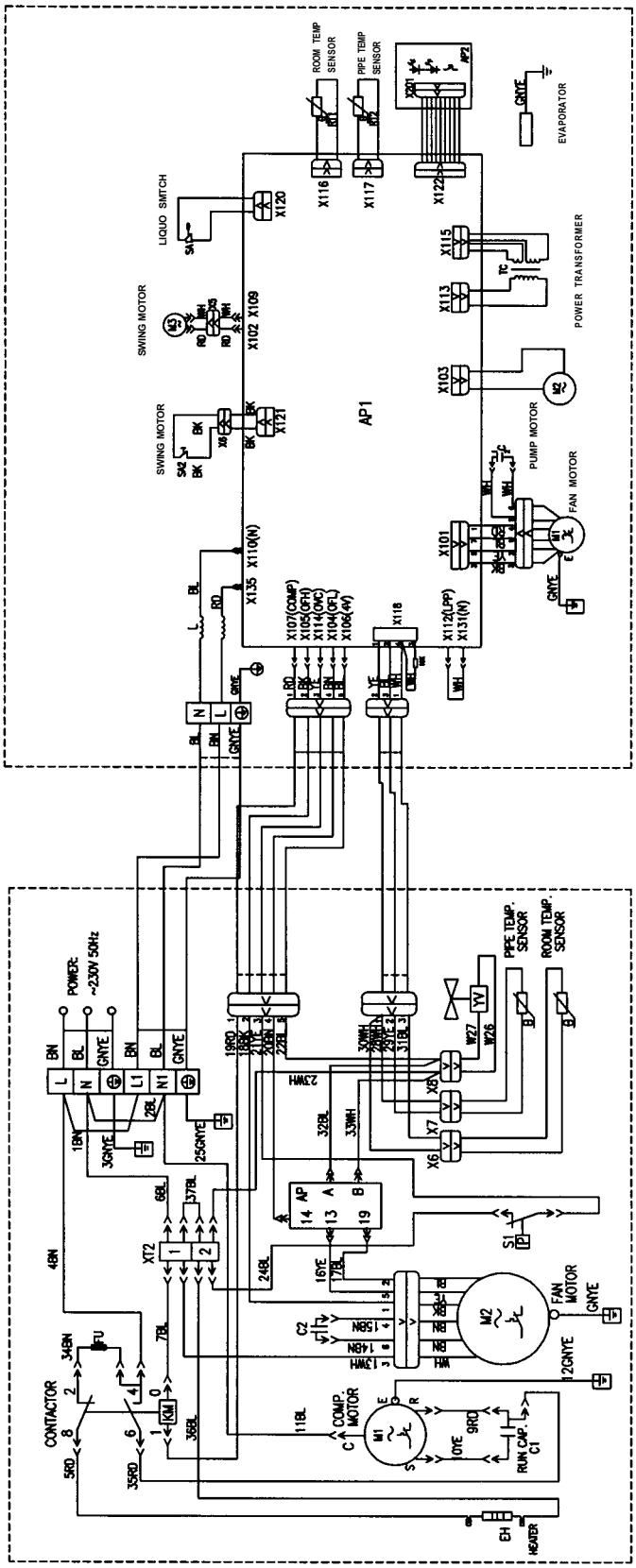

KFR-70TW/B1(7041T1)N
KFR-50TW/E1(5041T1)N

figure 8-14

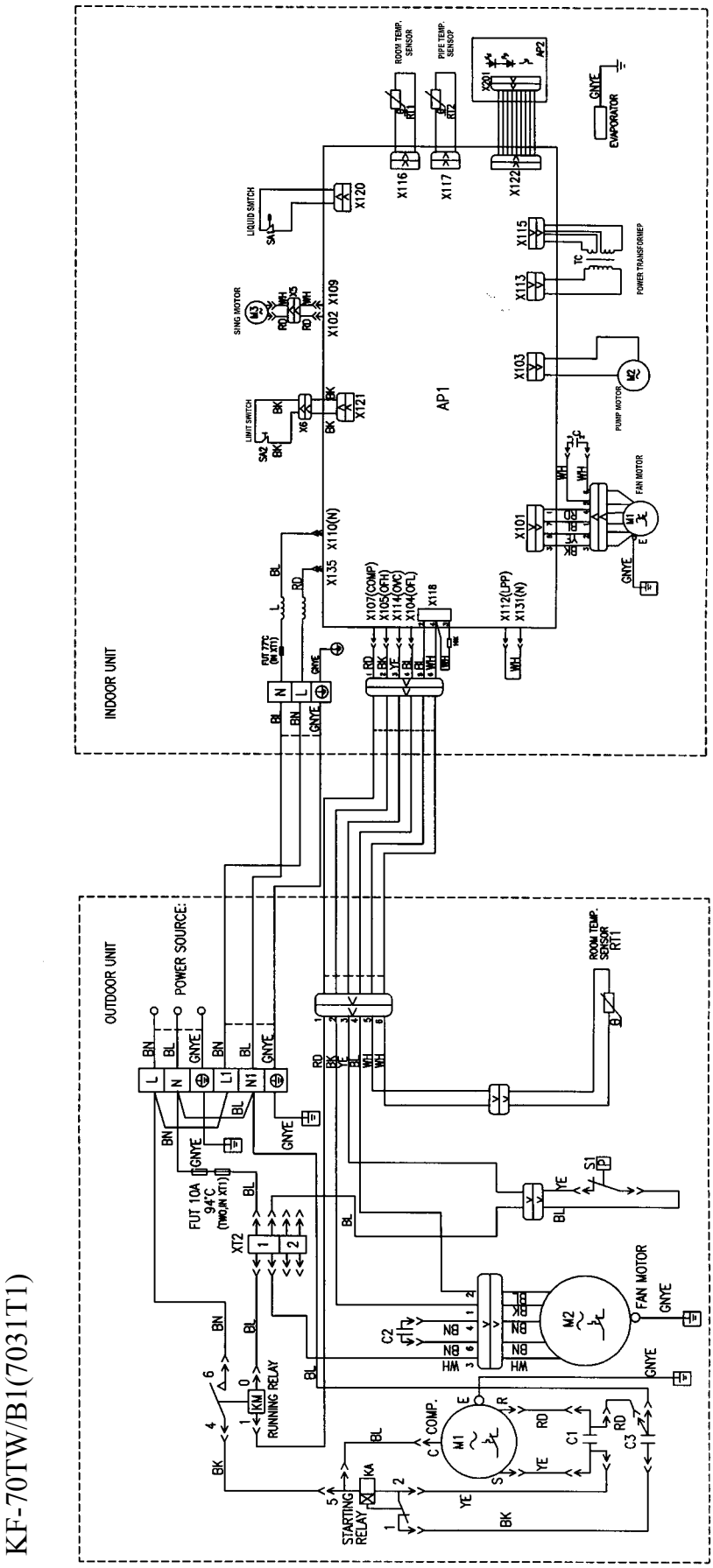

KF-70TW/B1(7031T1)

figure 8-15

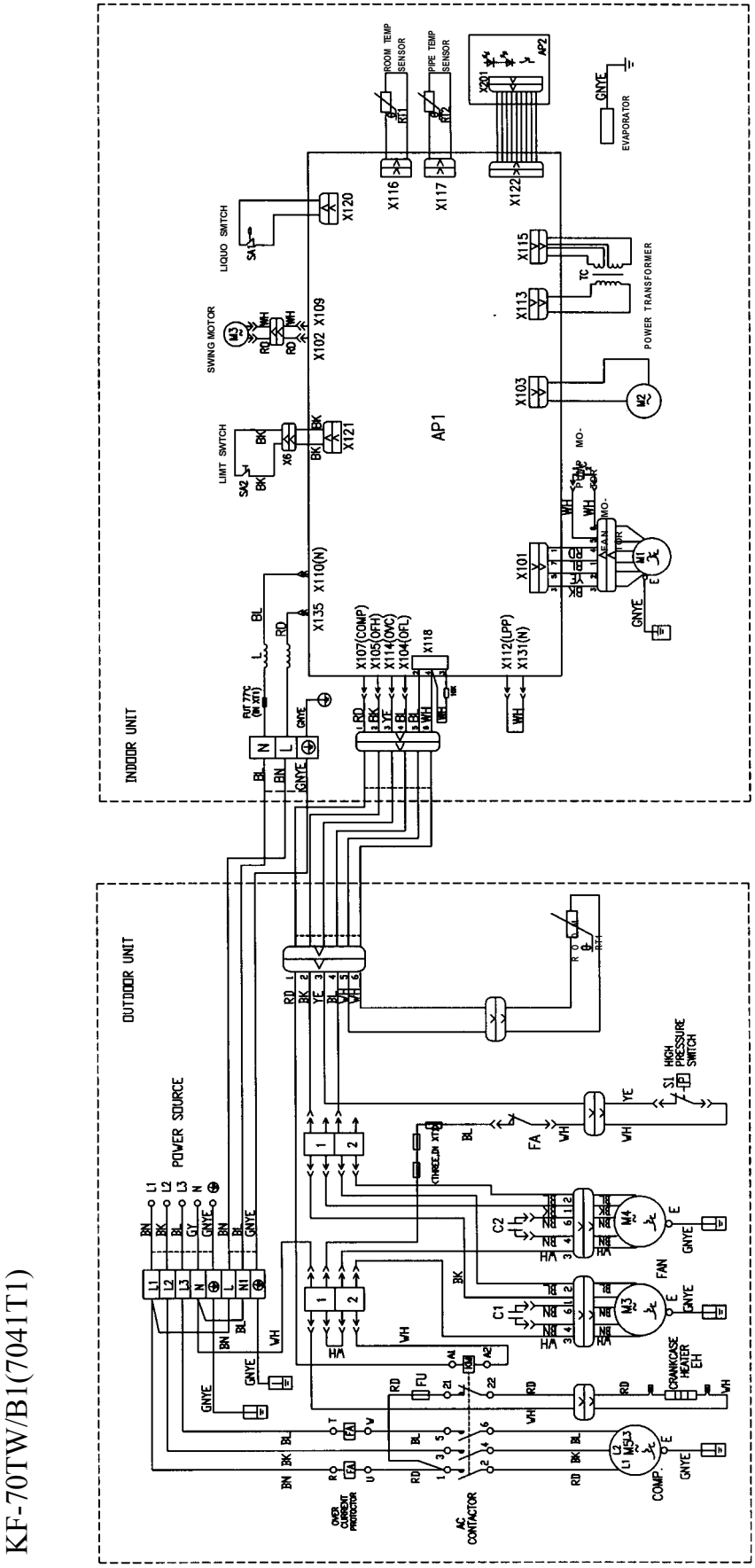

KF-70TW/B1(7041T1)

figure 8-16

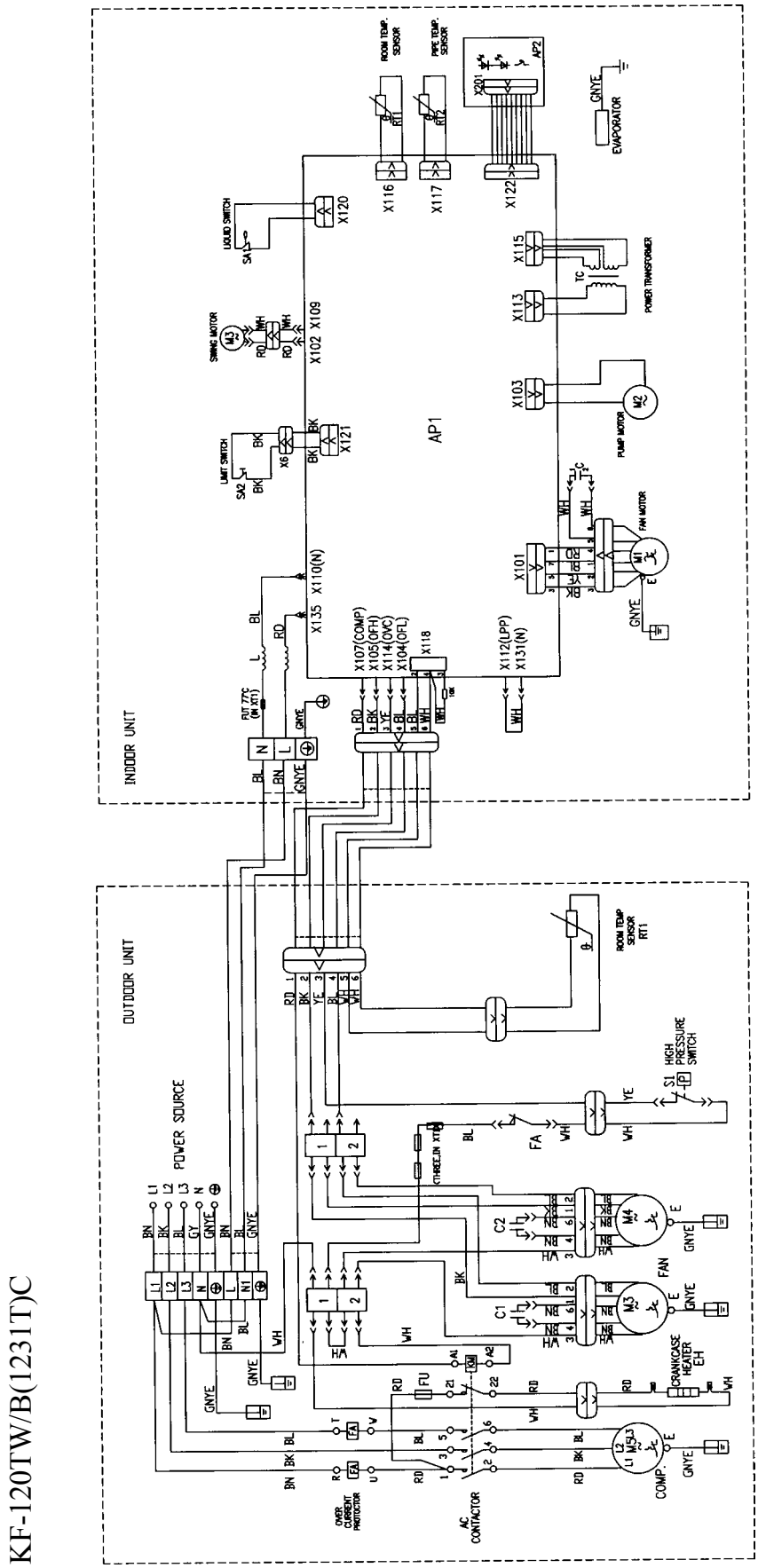

figure 8-17

KF-120TW/B(1231T)C

KFR-120TW/B(1251T)B

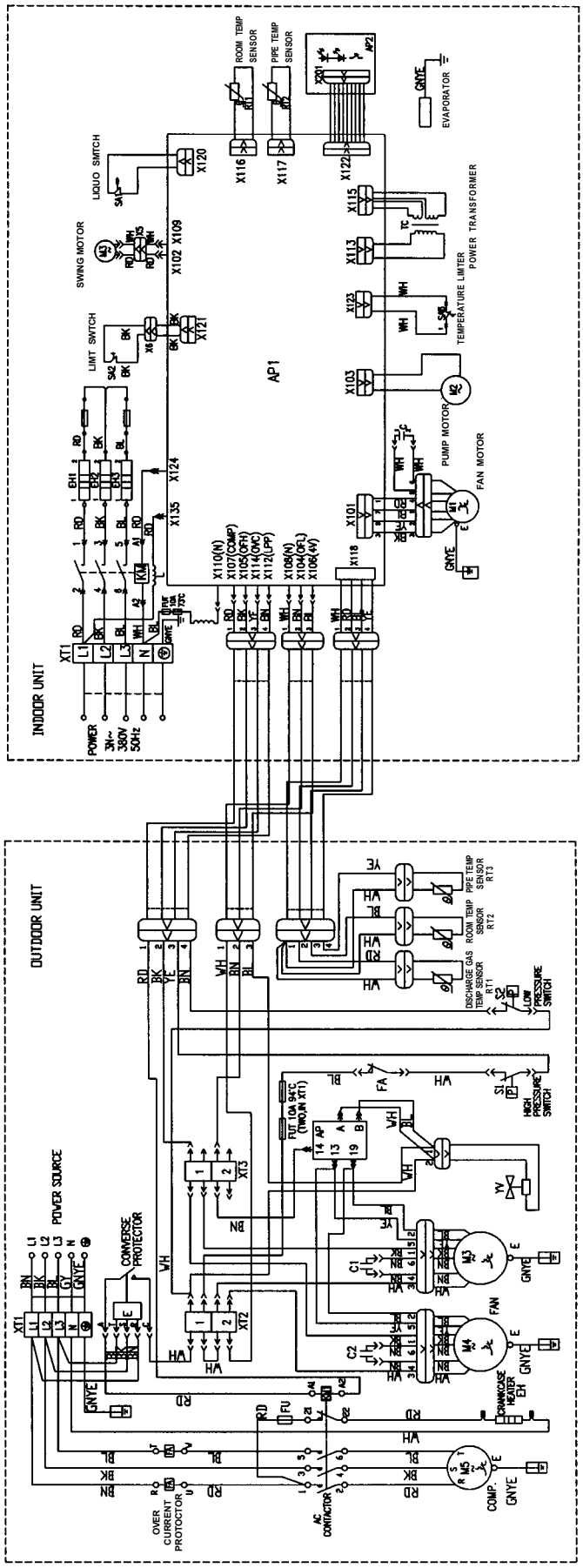

figure 8-18

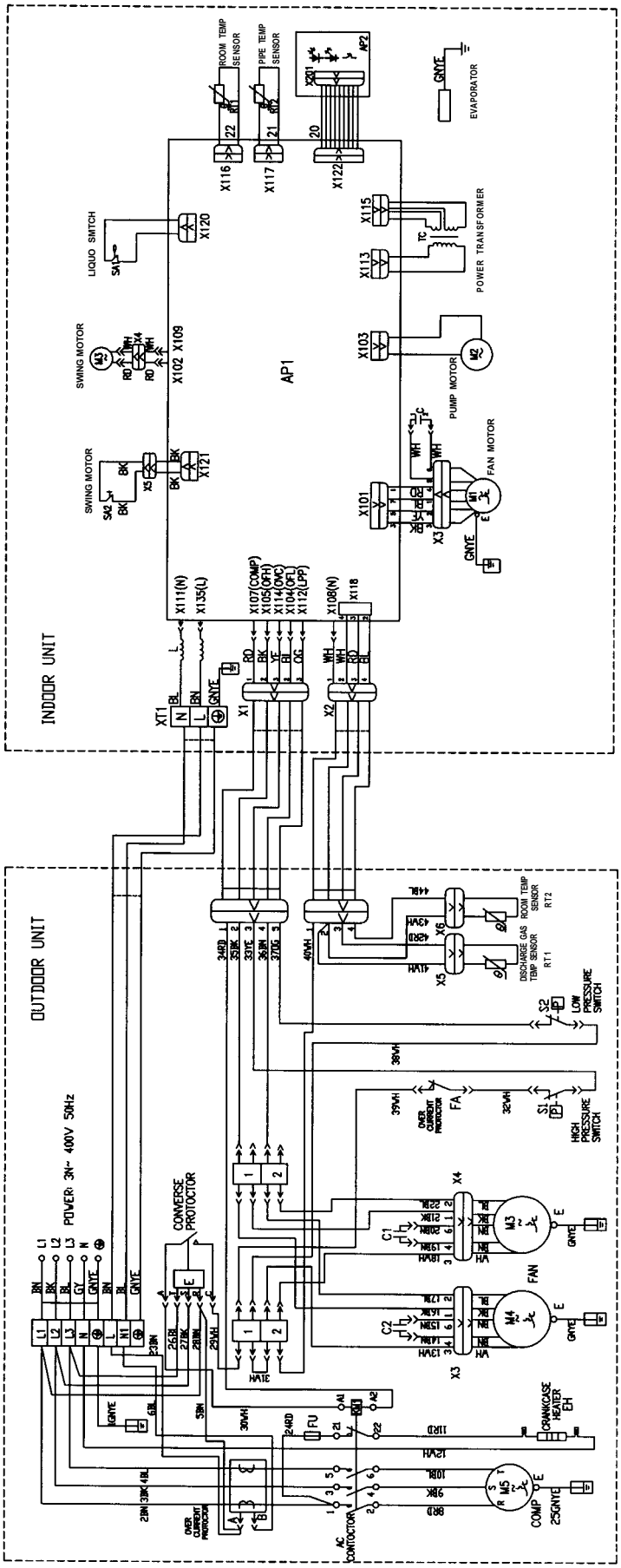

KFR-120TW/BN(1231T)N

figure 8-19

KFR-120TW/B(1241T)N

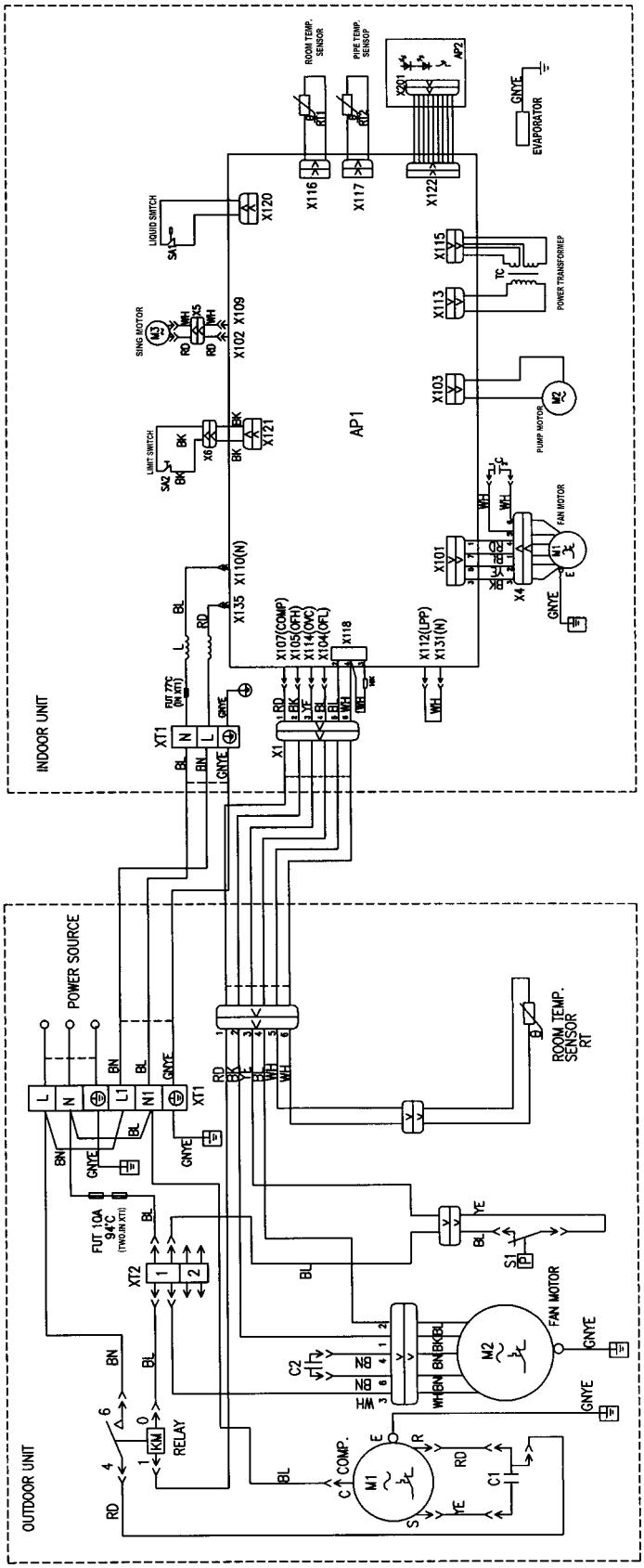

figure 8-20

8.14 PCB function manual

Casette type-PCB Function manual

1. **Running mode:**
   1) COOL; 2) DRY; 3) FAN; 4) HEAT; 5) AUTO.
2. **Controlling contents:**
   1) indoor unit fan motor(high, middle and low speed);
   2) sweep fan motor;
   3) electrical heater;
   4) outdoor unit fan motor(high and low);
   5) reversing valve;
   6) compressor;
   7) water pump;
   8) fresh air fan motor;
   9) anion creator.
3. **The parameter to be input:**
   1) the ambient temperature of the indoor unit (shorten form is T_{in});
   2) the evaporator temperature of the indoor unit (shorten form is T_{eva});
   3) the condenser temperature of the outdoor unit (shorten form is T_{con});
   4) the ambient temperature of the outdoor unit (shorten form is T_{out});
   5) the temperature of the gas output from the compressor (shorten form is T_{output}).
4. **The different controlling mode for the different function mode:**

   Under all of the modes, the compressor will continue work for 6 min once it starts (except for the protection of full-water). And it will be restart in 3min after it stops. At the beginning, the indoor unit fan motor runs for 8sec in high speed then change to the set fan speed; and it is same in the outdoor unit.

   1) Cooling mode:

      If $\mathbf{T_{in} \geqslant T_{set}-1}$℃, cooling mode act, compressor and outdoor unit run, and indoor unit run in the set speed;

      If $\mathbf{T_{in} \leqslant T_{set}-1}$℃, the unit will be stop from cooling mode, compressor and outdoor unit stop, and indoor unit still run in the set speed;

      If $\mathbf{T_{set}-1}$℃ $<$ $\mathbf{T_{in}}$ $<$ $\mathbf{T_{set}+1}$℃, keep running in the old mode;

      In the cooling mode, the range of T_{set} is 16℃~30℃.

      Outdoor fan motor working state:

      $\mathbf{T_{out} \geqslant 27}$℃, outdoor fan motor runs in high speed;

      $\mathbf{T_{out} \leqslant 24}$℃, outdoor fan motor runs in low speed;

      24℃ $<$ $\mathbf{T_{out}}$ $<$ **27**℃, outdoor fan motor runs in old speed

   2) Drying mode:

If $T_{in} > T_{set}+2$℃, drying mode act, compressor, indoor unit fan motor and outdoor unit fan motor run, The indoor unit fan motor runs in low speed;

If $T_{set}-2$℃$\leqslant T_{in} \leqslant T_{set}+2$℃, compressor, indoor unit fan motor and outdoor unit fan motor run for 6min, then stop for 4min, then run by this cycle. The indoor unit fan motor runs in low speed;

If $T_{in} < T_{set}-2$℃, compressor, outdoor unit fan motor and indoor unit fan motor stop.

In drying mode, the range of T_{set} is 16℃~30℃.

Outdoor fan motor working state:

$T_{out} \geqslant 27$℃, outdoor fan motor runs in high speed;

$T_{out} \leqslant 24$℃, outdoor fan motor runs in low speed;

24℃ < T_{out} < 27℃, outdoor fan motor runs in old speed

3) Heating mode:

If $T_{in} \leqslant T_{set}+1$℃, heating mode act, reversing, compressor and outdoor unit fan motor run, indoor unit fan motor runs in the set speed and the condition of avoiding the cold wind;

If $T_{in} \geqslant T_{set}+3$℃, compressor and outdoor unit fan motor stop, reserving valve is still electric ,the indoor unit fan motor runs in the set speed and flow the rest heat;

If $T_{set}+1$℃ < T_{in} < $T_{set}+3$℃, keep running in the old mode;

In the heating mode, the range of T_{set} is 16℃~30℃, the initialize is 25℃.

In the heating mode, the 4-way valve will be electroless in 2min after the unit is turned off.

The working condition of the outdoor unit:

If $T_{out} \geqslant 16$℃, the outdoor unit fan motor runs in low speed;

If $T_{out} \leqslant 13$℃, the outdoor unit fan motor runs in high speed;

If 13℃ > T_{out} > 16℃, the outdoor unit fan motor runs in the old speed;

The outdoor unit fan motor stop when it is defrosting.

The conditions of avoiding cold wind:

Indoor unit adjust the guider into horizontal first, indoor unit fan motor runs in high speed for 8sec then run in low speed.

a. Compressor run as soon as T_{in} achieve the temperature unit should start, indoor unit fan motor runs in low speed, guider is still horizontal. 30sec later, indoor unit fan motor runs in the set speed, guider run in the set mode (it run in the max angle if it has not be set).
b. Indoor unit fan motor run in the low speed and guider is horizontal if T_{in} doesn't achieve the temperature unit should start.

The conditions of flowing hot wind:

Once the compressor is stop, guider turn into horizontal, the indoor unit fan motor runs in low speed.

The conditions of beginning defrosting:

After the unit continue heating for 44min or if $T_{con} \leqslant -8$℃, the defrosting mode act, guider turn into horizontal, the reversal valve, the indoor and outdoor unit stop.

If there is electrical heater in the unit, then it will be stop first and the reversal valve, the

indoor and outdoor unit stop in 1min.

The conditions of stopping defrosting:

After the unit continue defrosting for 10min or if $T_{con} \geqslant 10^{\circ}C$, the defrosting stop, the reversal valve, the outdoor unit run, and the indoor unit fan motor will run in the condition of avoiding the cold wind.

The working condition of electrical heater:

When the indoor unit runs in high or middle speed and compressor runs, and $T_{eva} \leqslant 44^{\circ}C$ and $T_{in} \leqslant 23^{\circ}C$, and $T_{in} \leqslant T_{set}-1^{\circ}C$, the electrical heater act.

When the indoor unit is stop or runs in low speed or compressor in stop, or $T_{eva} \geqslant 52^{\circ}C$ or $T_{in} \geqslant 26^{\circ}C$, or $T_{in} \geqslant T_{set}+2^{\circ}C$, the electrical heater stop and will restart in 2min.

4) Fanning mode:

The indoor unit fan motor runs in the set fan speed:

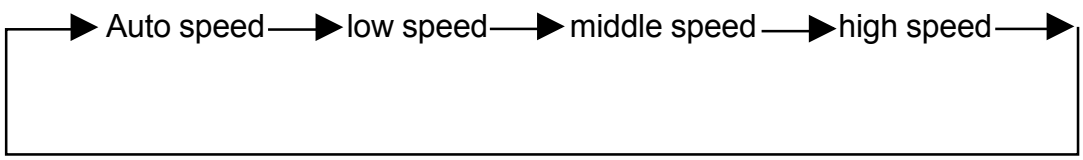

The range of is 16℃~30℃.

5) Auto mode:

It runs according the T_{in}.

If $T_{in} > 26^{\circ}C$, cooling mode act, the T_{set} is 26℃ automatically.

If $20^{\circ}C \leqslant T_{in} \leqslant 26^{\circ}C$, drying mode act, the T_{set} is 24℃ automatically.

If $T_{in} < 20^{\circ}C$, heating mode act, the T_{set} is 20℃ automatically till $T_{in} \geqslant 24^{\circ}C$.

If the unit is cooling only, if $T_{in} < 20^{\circ}C$, fanning mode act, the T_{set} is 20℃ automatically till $T_{in} \geqslant 24^{\circ}C$.

Once the each mode act, it will be in 30sec to change to the auto mode according the T_{in}.

5. Timer and sleep mode:

1) Sleep mode:

If it is cooling or drying, in 1hour of the beginning, the T_{set} will be increased 1℃, and it will be increased 1℃ after 2hour, then the unit runs in this temperature.

If it is heating, in 1hour of the beginning, the T_{set} will be decreased 1℃, and it will be decreased 1℃ after 2hour, then the unit runs in this temperature.

There is no sleep mode when fanning and auto mode act.

2) Timer for Turn on:

The unit is stop when the timer for turn on is acted, when it is time to turn on, the controller will act in the set mode. The distance of setting twice is 0.5hour and the range time is 0.5~24hour.

3) Timer for Turn off:

The unit is run when the timer for turn off is acted, the unit is stop, when it is time to turn off.

He distance of setting twice is 0.5hour and the range time is 0.5~24hour.

6. Other functions:

1) Sweeping:

It controlled by the “sweep” button of the remote controller. It is available when the indoor unit fan motor is run.

2) Buzzer function:

It will be act when the controller is turned on or received a right signal.

3) Auto fan speed of indoor unit:

The indoor unit fan motor will run by the rules till it runs for 30sec after the unit is turned on.

When heating act:

If $T_{in} \geqslant T_{set}+2℃$, the indoor unit fan motor runs in low fan speed;

If $T_{in} \leqslant T_{set}+1℃$, it is middle fan speed;

If $T_{in} < T_{set}-1℃$, it is high fan speed.

When cooling act:

If $T_{in} \leqslant T_{set}$, it is low fan speed;

If $T_{in} \geqslant T_{set}+1℃$, it is middle fan speed;

If $T_{in} > T_{set}+3℃$, it is high fan speed.

When fanning act:

If $T_{in} \leqslant T_{set}$, it is low fan speed;

If $T_{in} \geqslant T_{set}+1℃$, it is middle fan speed;

If $T_{in} > T_{set}+3℃$, it is high fan speed.

4) Indicator light:

a. **Running indicate light:** it turn on when the unit is turned on and turn off when the unit is turned on. It will be flashing when:

Defrosting, avoiding the cold wind, protecting of full-water tank.

b. **Timer light:** it turn on when the timer is set or the unit is in the mode of sleeping except the unit is off. It will be flashing when:

Protecting of the compressor in high-pressure, protecting of the compressor in low-pressure, protecting of the low power supply, protecting of the high-temperature of the compressor outlet pipe.

c. **Compressor light:** it turn on when the compressor runs and off when the compressor stop.

9.Floor Standing Type Series

9.1 Summary.

figure 9-1

MODEL	NOTE
KF-70LW/E (7032LA) D KFR-70LW/E (7052LA) D	3ph 380V~50Hz R22 With light panel
KF-70LW/E (7033L) D KFR-70LW/E(7053L) D	3ph 380V~50Hz R22 With LCD panel

figure 9-2

MODEL	NOTE
KF-120LW/E (1232LA) V KFR-120LW/E (1252LA) V	3ph 380V~50Hz R22 With light panel
KF-120LW/E (1233L) V KFR-120LW/E(1253L) V	3ph 380V~50Hz R22 With LCD panel

9.2 Technical specifications.

Table 9-1

Model				KF-70LW/E(7032LA)D	KFR-70LW/E(7052LA)D	
				KF-70LW/E(7033L)D	KFR-70LW/E(7053L)D	
Function				Cooling	Cooling	Heating
Power supply				3Ph-380V-50Hz		
Capacity			W	7000	7000	7400(9600)
Rated input			W	2900	2900	2600(4850)
Rated current			A	6.0	6.0	5.7(9.56)
Air flow			M^3/h	900		
Dehumidifying volume(L/h)			L/h	2.8		
EER (W/W)				2.35	2.35	2.85
Indoor unit	Motor Model			LN50B		
	Motor fan speed(r/min)			385/355/315		
	Output power(W)			50		
	Working capacitor(μF)			4.5		
	Fan type/piece			Centrifugal fan-1		
	Diameter-length(mm)			ϕ 378-130		
	evaporator			Aluminum fin-copper tube		
	Row-fin distance(mm)			2-1.5		
	Working area(m^2)			763 × 430		
	Swing motor			SM016		
	Input power(W)-speed(r/min)			5-5		
	Fuse(A)			Controllor 3.15A Transformer 0.2A		
	Noise(dB(A))			48		
	Dimension(width-depth-height)mm			540 × 300 × 1750		
	Net weight(kg)			50		
Outdoor unit	Compressor	type		reciprocating compressor		
		Model		AVA5535EXG	AVA5535EXG	
		Input power W		2842	2842	
		Overload protector		out set		
		L.R.A. A		33		
		Working temp.		Exhaust temperature ⩽ 143.3℃		
		Starting method				
	Condensser	Condenser		Aluminum-copper		
		Pipe-diameter		ϕ 9.52		
		Row-fin diatance		1.8		
		Working area (mm × mm)		840 × 760		
	fan	Fan motor model		LW60B		
		Output power		60		
		Fan motor speed(rpm)		780		
		Capacitor μF		3		
		Fan type/piece		Axial fan-1		
		Fan Diameter (mm)		ϕ 455		
	High pressure switch	Model		HZOPS-B3.0/2.4Mpa or YK-3.0/2.4MPa		
		Cutoff pressure		3.0 ± 0.15MPa		
		Restart pressure		2.4 ± 0.15MPa		
	Throttling method			Capillary		
	Defrosting method			Auto defrost		
	Noise dB(A)			58		
	Dimension(mm)(Width-height-depth)			950 × 840 × 412		
	Net weight(kg)			75		
	Refrigerant charge(kg)			R22 2.5		
Connecting pipe	Outer diameter	Liquid pipe	mm	ϕ 3/8”		
		Gas pipe	mm	ϕ 5/8”		
	Standard length		m	5		
	Max distance	height	m	5		
		Length	m	10		

The technical date are subject to change without notice .Please refer to the nameplate of the unit.

Floor Standing Type Series

Table 9-2

Model				KF-120LW/E(1232LA)V	KFR-120LW/E(1252LA)V	
				KF-120LW/E(1233L)V	KFR-120LW/E(1253L)V	
Function				Cooling	Cooling	Heating
Power supply				3Ph-380V-50Hz		
Capacity			W	12000	12000	12000(15500)
Rated input			W	4900	4900	4300(7800)
Rated current			A	8.5	8.5	7.4(12.8)
Air flow			M^3/h	1500		
Dehumidifying volume(L/h)			L/h	4.8		
EER (W/W)				2.45	2.45	2.79
Indoor unit	Model Model			LN100B		
	Motor fan speed(r/min)			530/490/460		
	Output power(W)			100		
	Working capacitor(μF)			4.5		
	Fan type/piece			Centrifugal fan-1		
	Diameter-length(mm)			ϕ 378-180		
	evaporator			Aluminum fin-copper tube		
	Row-fin distance(mm)			2-1.4		
	Working area(m^2)			838 × 430		
	Swing motor			SM016		
	Input power(W)-speed(r/min)			5-5		
	Fuse(A)			Controllor 3.15A Transformer 0.2A		
	Noise(dB(A))			57		
	Dimension(width-depth-height)mm			540 × 380 × 1750		
	Net weight(kg)			58		
Outdoor unit	Compres-sor	type		reciprocating compressor		
		Model		C-SB373H8A	C-SB373H8A	
		Input power W		5200	5200	
		Overload protector		out set		
		L.R.A. A		62		
		Working temp.		Exhaust temperature ⩽ 115℃		
		Starting method		1R		
	Condenser	Condenser		Aluminum-copper		
		Pipe-diameter		ϕ 9.52		
		Row-fin diatance		3-1.8		
		Wirjubg area (mm × mm)		1218 × 683		
	fan	Fan motor model		LW68A		
		Output power		68		
		Fan motor speed(rpm)		840		
		Capacitor μF		3.5		
		Fan Diameter (mm)		ϕ 455		
	High pressure switch	Model		HZOPS-B3.0/2.4Mpa 或 YK-3.0/2.4MPa		
		Cutoff pressure		3.0 ± 0.15MPa		
		Restart pressure		2.4 ± 0.15MPa		
	Throttling method			Capillary		
	Defrosting method			Auto defrost		
	Noise dB(A)			61		
	Dimension(mm)(Width-height-depth)			950 × 1250 × 412		
	Net weight(kg)			112		
	Refrigerant charge(kg)			R22 3.8		
Connecting pipe	Outer diameter	Liquid pipe	mm	ϕ 3/4”		
		Gas pipe	mm	ϕ 1/2”		
	Standard length		m	5		
	Max distance	height	m	5		
		Length	m	10		

The technical date are subject to change without notice .Please refer to the nameplate of the unit.

9.3 Outlines and dimensions of indoor unit

For 70 model

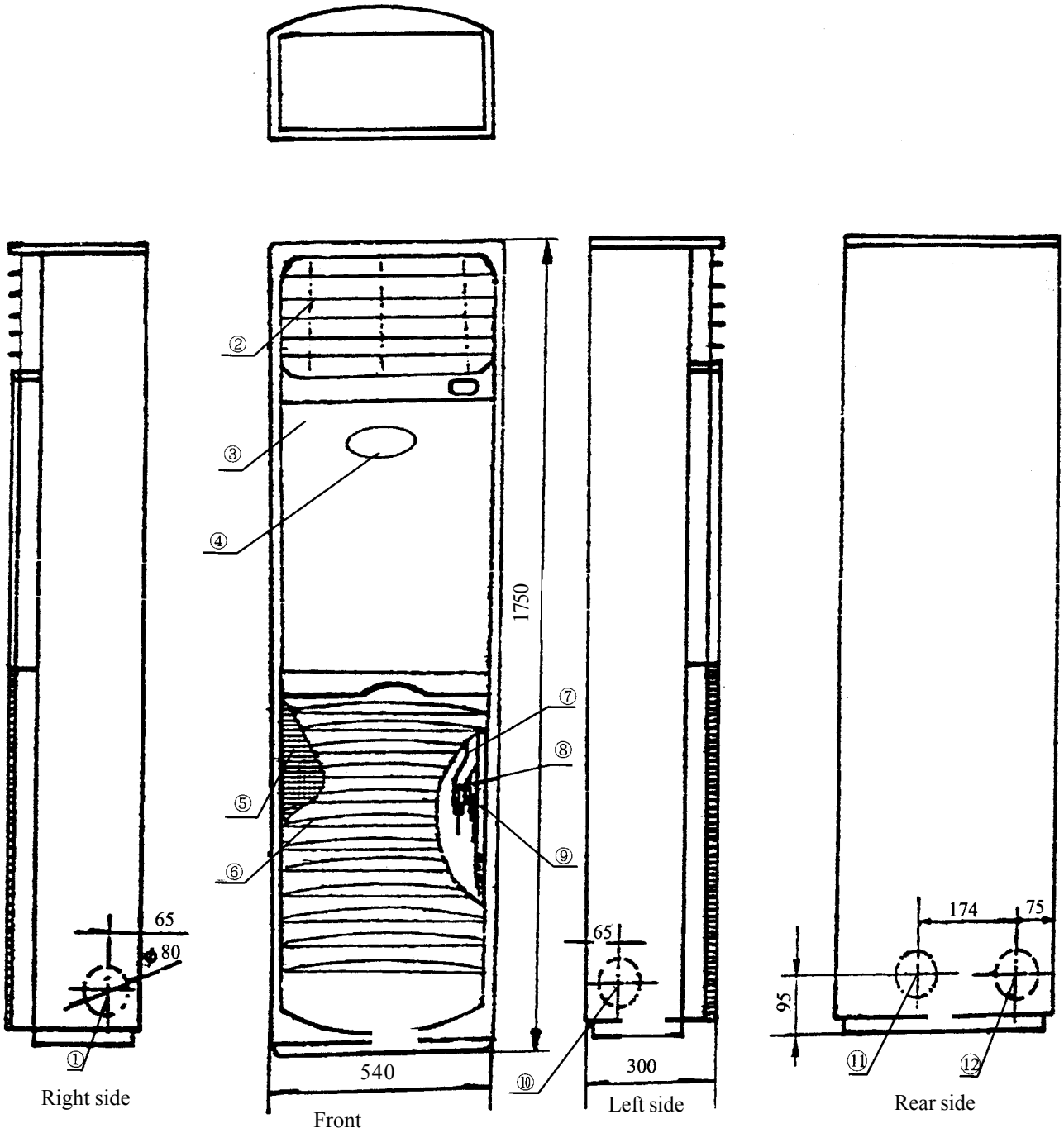

①Right knock-out hole	②Grille
③Front panel	④Controller
⑤Filter	⑥Air intake grille
⑦Gas pipe	⑧Liquid pipe
⑨Drainage hose	⑩Left knock-out hole
⑪Rear right knock-out hole	⑫Rear left knock-out hole

figure 9-3

For 120 model

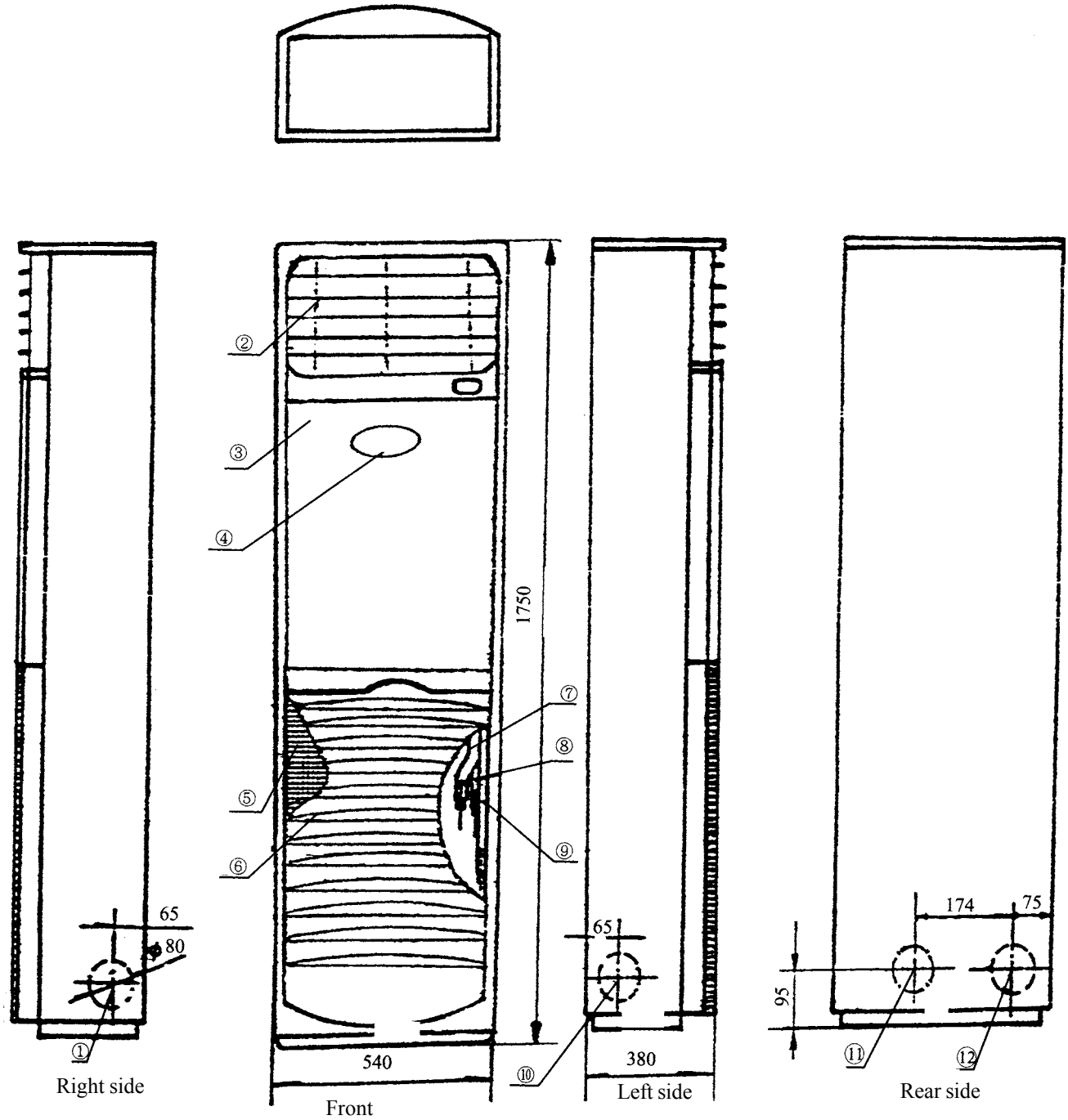

①Right knock-out hole	②Grille
③Front panel	④Controller
⑤Filter	⑥Air intake grille
⑦Gas pipe	⑧Liquid pipe
⑨Drainage hose	⑩Left knock-out hole
⑪Rear right knock-out hole	⑫Rear left knock-out hole

figure 9-4

9.4 Outlines and dimensions of outdoor unit

For 70 model

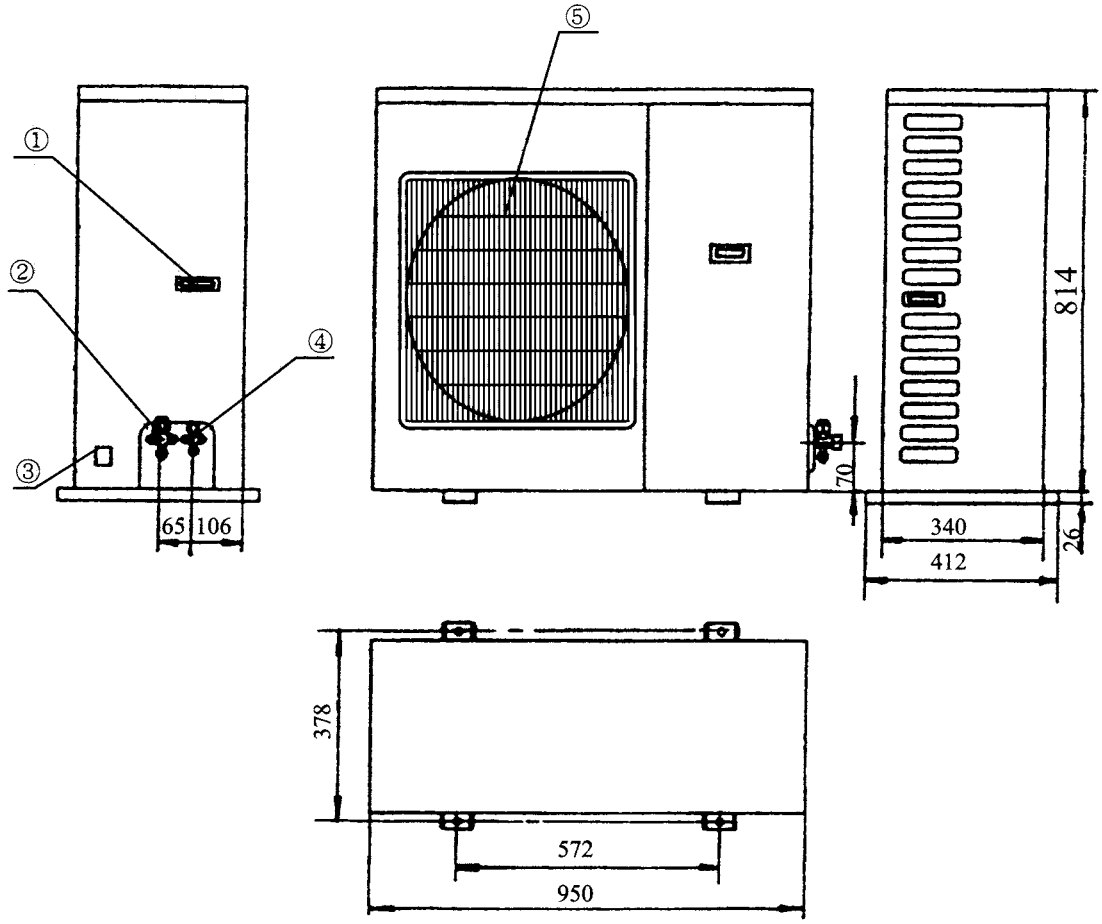

①Handle ②Gas valve assy ③Wire hole ④Liquid valve assy ⑤Grille

figure 9-5

For 120 model

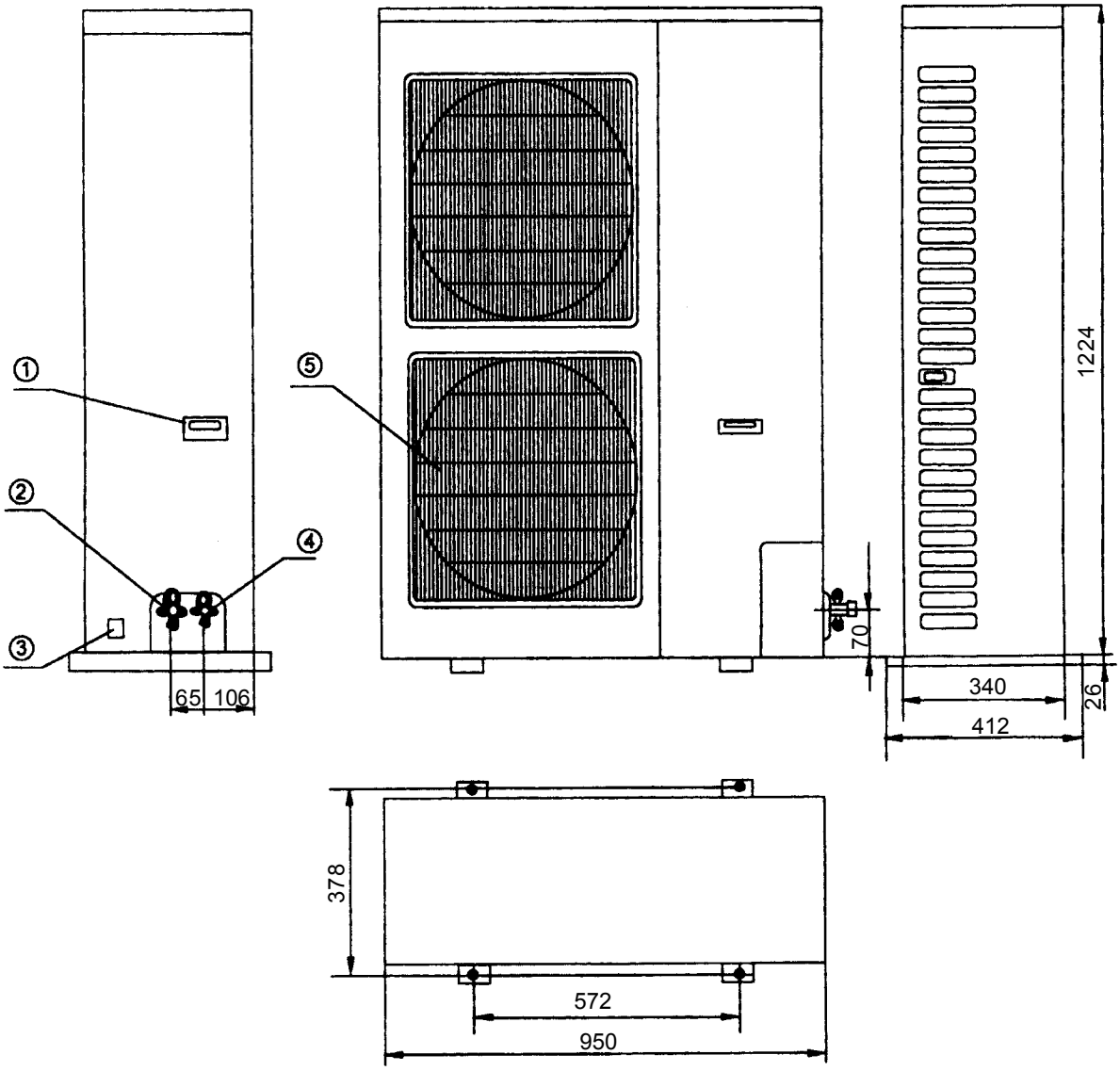

①Handle ②Gas valve assy ③Wire hole ④Liquid valve assy ⑤Grille

figure 9-6

9.5 Explosive view of indoor unit

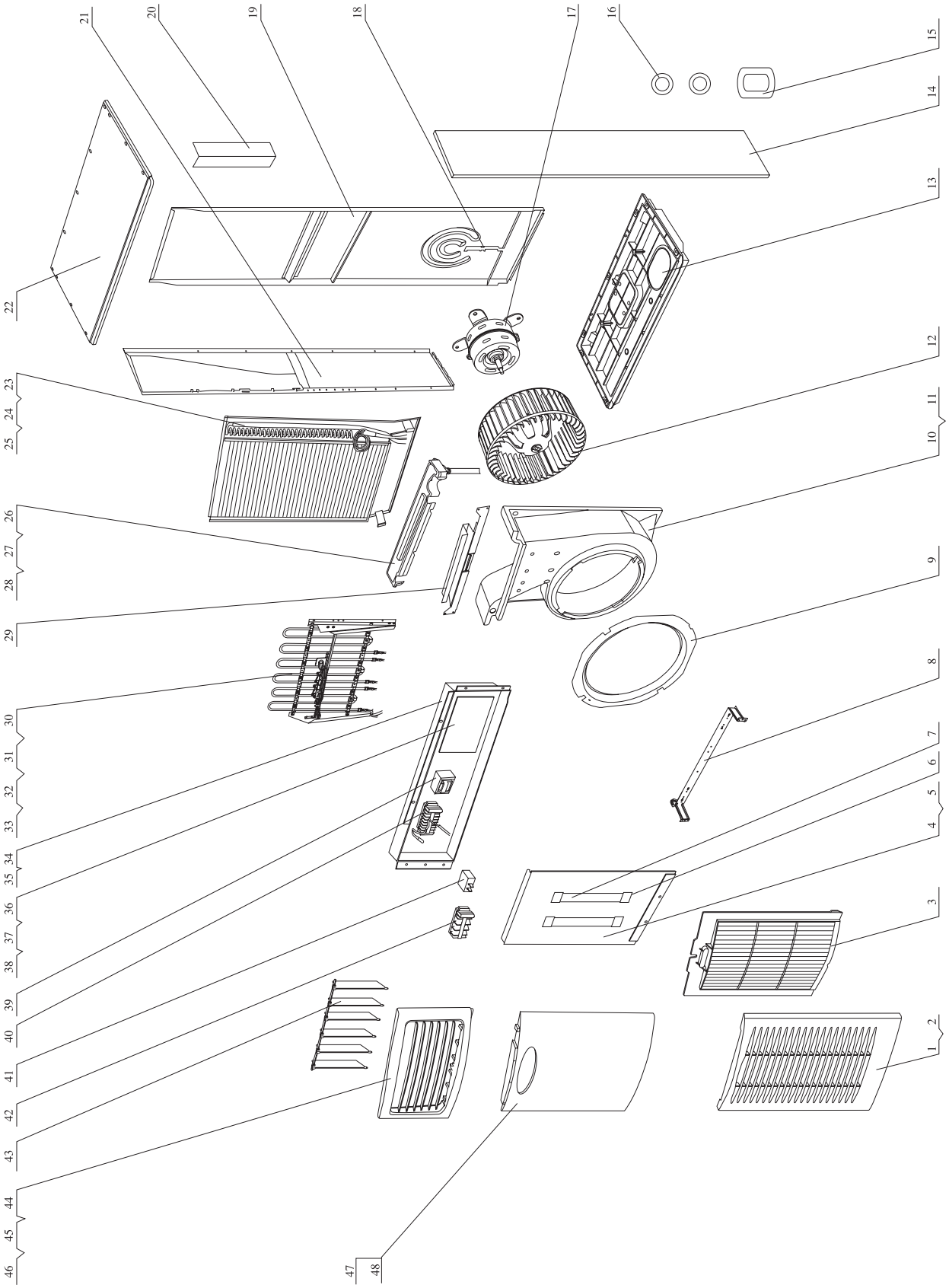

figure 9-7

9.6 Spare parts list of indoor unit

Table 9-3

No.	Description	名称及规格	Part No.				Qty
			KF-70L (7032LA)D	KFR-70L (7052LA)D	KF-70L (7033L)D	KFR-70L (7053L)D	
1	air intake assy	进风面板部件	20004202	20004202	20004202	20004202	1
2	chain	防倒链	70814001	70814001	70814001	70814001	1
3	filter assy	过滤网组件	11124071	11124071	11124071	11124071	1
4	air guard assy	挡风板部件	01364230	01364230	01364241	01364241	1
5	rectifier	EMC 型电子镇流器 2X12W	43130105	43130105	\	\	1
6	lamp seat	灯座	26154431	26154431	\	\	4
7	lamp	12W 荧光灯管	49010001	49010001	\	\	2
8	lower baffle	下横挡板组件	01384216	01384216	01384216	01384216	1
9	diversion circle	导流圈	10374202	10374202	10374202	10374202	1
10	propeller house	蜗壳组件	12104240	12104240	12104240	12104240	1
11	foam fixed screw	蜗壳安装螺钉	70110003	70110003	70110003	70110003	9
12	centrifugal fan	离心风叶	10314201	10314201	10314201	10314201	1
13	underpan	底盘	22224201	22224201	22224201	22224201	1
14	right side plate	右侧板组件	01304202	01304202	01304202	01304202	1
15	pipe-crossing loop	过管密封圈	76514421	76514421	76514421	76514421	1
16	cable-crossing loop	室内机过线圈	76514425	76514425	76514425	76514425	2
17	fan motor LN50B	电机 LN50B	15014205	15014205	15014205	15014205	1
18	cable-pressed plate	压线板	01384201	01384201	01384201	01384201	1
19	rear plate	后板组件	01304241	01304241	01304241	01304241	1
21	protective cover	保护盖板	22244231	22244231	22244231	22244231	1
21	left side plate	左侧板组件	01304201	01304201	01304201	01304201	1
22	top cover assy	顶盖组件	22244230	22244230	22244230	22244230	1
23	evaporator assy	蒸发器部件	01004224	01004220	01004224	01004220	1
24	seal ring	密封碗	76514202	76514202	76514202	76514202	1
25	sensor insert	感温头插片 B	42020063	42020063	42020063	42020063	1
26	water tray assy	接水盘组件	12414210	12414210	12414210	12414210	1
27	drainage pipe	排水管组件	05235433	05235433	05235433	05235433	1
28	breakwater	挡水板组件	01364210	01364210	01364210	01364210	1
29	water tray support	接水盘固定板组件	01274210	01274210	01274210	01274210	1
30	assistant heater assy	辅助电加热部件	\	32004202	\	32004202	1
31	temperature limiter 65℃	限温器 65℃	\	46010505	\	46010505	1
32	fuse 99℃ 10A	热熔断体 99℃ 10A	\	46010355	\	46010355	2
32	fuse 98℃(G4A01098C)	或热熔断器98℃(G4A01098C)	\	46010302	\	46010302	2
33	electric heater 850W	电加热管 850W	\	32014007	\	32014007	3
34	electric box assy	电器盒组件	01404211	01404211	01404211	01404211	1
35	electric box cover	电器盒盖组件	01404221	01404221	01404221	01404221	1
36	PCB 3351	控制器 3351	30023015	\	\	\	1
36	PCB 3353F	控制器 3353F	\	30023047	\	\	1
36	PCB 3451	控制器 3451(中文显示)	\	\	30023028	\	1
36	PCB 3R51	控制器 3R51(英文显示)	\	\	30023014	\	1
36	PCB 3453F	控制器 3453F(中文显示)	\	\	\	30023048	1
36	PCB 3R53F	控制器 3R53F(英文显示)	\	\	\	30023063	1
37	switch board 3343	3343 开关板	30044305	30044305	30044305	30044305	1
38	receive board 3L53	3L53 接收板	30044304	30044304	30044304	30044304	1
39	transformer SC25A	电源变压器 SC25A	43110168	43110168	43110168	43110168	1
40	AC contacter FMC-O	交流接触器 FMC-O	\	44010220	\	44010220	1
40	AC contacter LC1K0910M7	或交流接触器 LC1K0910M7	\	44010199	\	44010199	1
41	capacitor 4.5uF/450VAC	电容 4.5uF/450VAC	33010012	33010012	33010012	33010012	1
42	terminal board GT360C2	接线板 GT360C2	42011024	\	42011024	\	1
42	terminal board T5A0A-77	接线板 T5A0A-77	\	42011209	\	42011209	1

Table 9-3 continue

No.	Description	名称及规格	Part No.				Qty
			KF-70L (7032LA)D	KFR-70L (7052LA)D	KF-70L (7033L)D	KFR-70L (7053L)D	
43	air louver	扫风叶片	10514212	10514212	10514212	10514212	6
44	air outlet assy	出风口部件	20004201	20004201	20004201	20004201	1
45	air guider	导风叶片	10514213	10514213	10514213	10514213	6
46	swing motor	同步电机 SM016	15214215	15214215	15214215	15214215	1
47	light panel assy	灯箱部件	80004207	80004207	\	\	1
47	panel assy	面板部件	\	\	20004215	20004215	1
48	light picture	灯箱片	80004204	80004204	\	\	1
49	plastic pipe	吹塑排水管	05230022	05230022	05230022	05230022	1
50	remote controler Y512	遥控器Y512	30512501	30512501	\	\	1
51	power cable	电源线 RVV 5X1.5	\	40020290	\	40020290	1
52	connect cable	电源连接线	40020417	40020419	40020417	40020419	1
53	power cable	电源线YZW 5X1.5	40020299	\	40020299	\	1
54	signal	信号控制线	\	40032147	\	40032147	1
55	signal	信号控制线	40032112	40032139	40032112	40032139	1
56	room sensor	室内环境感温包	39000153	39000153	\	\	1
57	tube sensor	室内管温感温包	39000143	39000168	\	\	1
58	4 core sensor	四芯感温包	\	\	39000135	39000171	1
59	17 core connect cable	十七芯连线	\	\	40030056	40030056	1

The data are subject to change without notice.

Table 9-4

No.	Description	名称及规格	Part No.				Qty
			KF-120L (1232LA)V	KFR-120L (1252LA)V	KF-120L (1233LA)V	KFR-120L (1253LA)V	
1	air intake assy	进风面板部件	20004202	20004202	20004202	20004202	1
2	chain	防倒链	70814001	70814001	70814001	70814001	1
3	filter assy	过滤网组件	11124071	11124071	11124071	11124071	1
4	air guard assy	挡风板部件	01364230	01364230	01364230	01364230	1
5	rectifier	EMC 型电子镇流器 2X12W	43130105	43130105	\	\	1
6	lamp seat	灯座	26154431	26154431	\	\	4
7	lamp	12W 荧光灯管	49010001	49010001	\	\	2
8	lower baffle	下横挡板组件	01384216	01384216	01384216	01384216	1
9	diversion circle	导流圈	10374202	10374202	10374202	10374202	1
10	propeller house	蜗壳组件	12104441	12104441	12104441	12104441	1
11	foam fixed screw	蜗壳安装螺钉	70110003	70110003	70110003	70110003	9
12	centrifugal fan	离心风叶	10314401	10314401	10314401	10314401	1
13	underpan	底盘	22224431	22224431	22224431	22224431	1
14	right side plate	右侧板组件	01304434	01304434	01304434	01304434	1
15	pipe-crossing loop	过管密封圈	76514421	76514421	76514421	76514421	1
16	cable-crossing loop	室内机过线圈	76514425	76514425	76514425	76514425	2
17	fan motor LN100B	电机 LN100B	15014402	15014402	15014402	15014402	1
18	cable-pressed plate	压线板	01384201	01384201	01384201	01384201	1
19	rear plate	后板组件	01304441	01304441	01304441	01304441	1
20	protective cover	保护盖板	22244231	22244231	22244231	22244231	1
21	left side plate	左侧板组件	01304433	01304433	01304433	01304433	1
22	top cover assy	顶盖组件	01254431	01254431	01254431	01254431	1
23	evaporator assy	蒸发器部件	01004303	01004301	01004303	01004301	1
24	seal ring	密封碗	76514415	76514415	76514415	76514415	1
25	sensor insert	感温头插片 B	42020063	42020063	42020063	42020063	1
26	water tray assy	接水盘组件	12414210	12414210	12414210	12414210	1
27	drainage pipe	排水管组件	05235433	05235433	05235433	05235433	1
28	breakwater	挡水板组件	01364431	01364431	01364431	01364431	1
29	water tray support	接水盘固定板组件	01274210	01274210	01274210	01274210	1
29	water tray support	接水盘固定板组件	01274210	01274210	01274210	01274210	1
30	assistant heater assy	辅助电加热部件	\	32004401	\	32004401	1
31	temperature limiter 65℃	限温器 65℃	\	46010505	\	46010505	1
32	fuse 100℃ 15A	热熔断体 100℃ 15A	\	46010351	\	46010351	2
33	electric heater 1167W	电加热管 1167W	\	32014003	\	32014003	3
34	electric box assy	电器盒组件	01404211	01404211	01404211	01404211	1
35	electric box cover	电器盒盖组件	01404221	01404221	01404221	01404221	1
35	electric box cover	电器盒盖组件	01404222	01404222	01404222	01404222	1
36	PCB 3351	控制器 3351	30023015	\	\	\	1
36	PCB 3353F	控制器 3353F	\	30023047	\	\	1
36	PCB 3451	控制器 3451(中文显示)	\	\	30023028	\	1
36	PCB 3R51	控制器 3R51(英文显示)	\	\	30023014	\	1
36	PCB 3453F	控制器 3453F(中文显示)	\	\	\	30023048	1
36	PCB 3R53F	控制器 3R53F(英文显示)	\	\	\	30023063	1
37	switch board 3343	3343 开关板	30044305	30044305	30044305	30044305	1
38	receive board 3L53	3L53 接收板	30044304	30044304	30044304	30044304	1
39	transformer SC25A	电源变压器 SC25A	43110168	43110168	43110168	43110168	1
40	AC contacter FMC-O	交流接触器 FMC-O	\	44010220	\	44010220	1
40	AC contacter LC1K0910M7	或交流接触器 LC1K0910M7	\	44010199	\	44010199	1
41	capacitor 4.5uF/450VAC	电容 4.5uF/450VAC	33010012	33010012	33010012	33010012	1
42	terminal board GT360C2	接线板 GT360C2	42011024	\	42011024	\	1

Table 9-4 continue

No.	Description	名称及规格	Part No.				Qty
			KF-120L (1232LA)V	KFR-120L (1252LA)V	KF-120L (1233LA)V	KFR-120L (1253LA)V	
42	terminal board T5A0A-77	接线板 T5A0A-77	\	42011209	\	42011209	1
43	air louver	扫风叶片	10514212	10514212	10514212	10514212	6
44	air outlet assy	出风口部件	20004201	20004201	20004201	20004201	1
45	air guider	导风叶片	10514213	10514213	10514213	10514213	6
46	swing motor	同步电机 SM016	15214215	15214215	15214215	15214215	1
47	light panel assy	灯箱部件	80004207	80004207	\	\	1
47	panel assy	面板部件	\	\	20004215	20004215	1
48	light picture	灯箱片	80004204	80004204	\	\	1
49	plastic pipe	吹塑排水管	05230022	05230022	05230022	05230022	1
50	remote controler Y512	遥控器Y512	30512501	30512501	30512501	30512501	1
51	power cable	内机电源线 RVV 5X1.5	\	40020290	\	40020290	1
52	connect cable	电源连接线YZW 3X0.75	40020416	\	40020416	\	1
53	power cable	外机电源线YZW 5X1.5	40020299	40020299	40020299	40020299	1
54	signal	信号控制线	\	40032127	\	40032127	1
55	signal	信号控制线	40032128	40032128	40032128	40032128	1
56	room sensor	室内环境感温包	39000153	39000153	\	\	1
57	tube sensor	室内管温感温包	39000143	39000143	\	\	1
58	4 core sensor	四芯感温包	\	\	39000135	39000171	1
59	17 core connect cable	十七芯连线	\	\	40030056	40030056	1

The data are subject to change without notice.

9.7.1 Explosive view of outdoor unit (for 70 model)

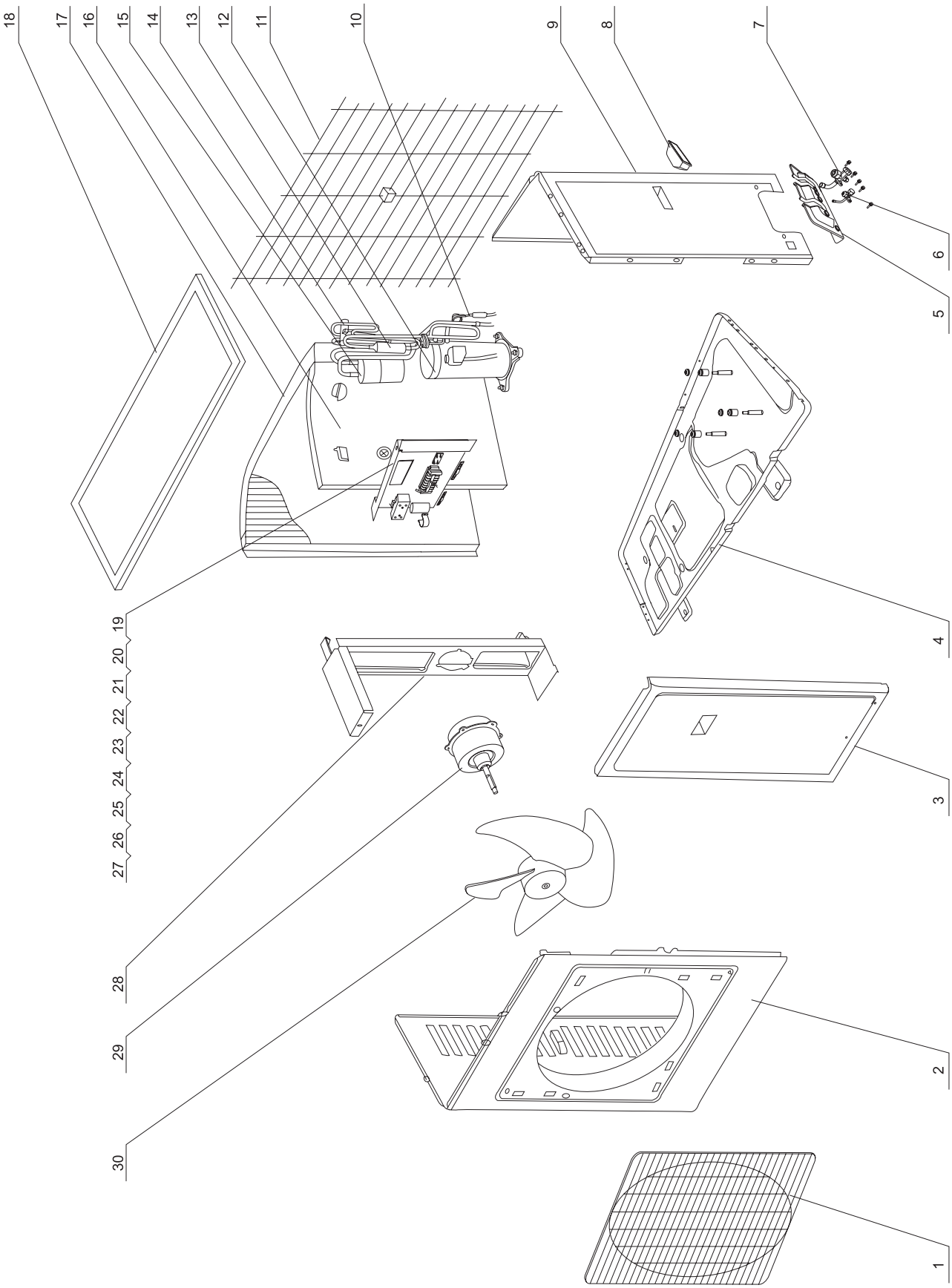

figure 9-8

9.7.2 Spare parts list of outdoor unit (for 70 model)

Table 9 -5

No.	Description		Part No.		Qty
			KF-70W/LED	KFR-70W/LED	
1	Front Grill	面罩组件	22265250	22265250	1
2	Front Plate	外罩	01435254	01435254	1
3	Front Side Plate	前侧板组件	01305018	01305018	1
4	Metal Base	底盘组件	01205011	01205011	1
5	Valve Support	阀门支架组件	01715001	01715001	1
6	Liquid Valve Assy	小阀门组件	07105256	07105256	1
7	Gas Valve Assy	大阀门组件	07105252	07105252	1
8	Handle	把手	26235253	26235253	1
9	Rear Side Plate	后侧板	01305260	01305260	1
10	Pressure protection switch	压力保护开关	46020003	46020003	1
11	Rear grill Assy	网罩	01475251	01475251	1
12	Compressor	压缩机 AVA5535EXG	00100503	00100503	1
13	Silencer	消音器	07245201	07245201	1
14	4 way Valve	四通阀 CHV-0201	/	43000310	1
15	Gas-liquid Separator	汽液分离器部件	07255251	07255251	1
16	Isolation Sheet Assy	中间隔板组件	01235253	01235253	1
17	Condenser Assy	冷凝器部件	01105031	01105035	1
18	Top Cover Assy	顶盖组件	01255260	01255260	1
19	Electric Box	电器盒组件	01405201	01405201	1
20	Cable Clamp	电线夹	71010102	71010102	1
21	insulating piece	绝缘垫片 C	70410523	70410523	1
22	Fan Capacitor 3uF/450V	风机电容 3uF/450V	33010021	33010021	1
23	AC Contactor 3TF4211	双极交流接触器 3TF4211	44010224	\	1
23	AC Contactor 3TF4211 3TF4111-1RMO	交流接触器 3TF4111-1RMO	\	44010205	1
24	terminal board GT8F0A1	接线板 GT8F0A1	42011036	\	1
24	terminal board T6C0A	六位接线板 T6C0A	\	42011230	1
25	Over current protector HD-09-22	过流保护器 HD-09-22	46020109	\	1
25	Over current protector UO-10-9.0A	过流保护器 UO-10-9.0A	\	46020108	1
26	AC relay VC15-3A1B-AC220	交流继电器 VC15-3A1B-AC220	\	44020305	1
27	Velometer	调速器 TS60	\	30117001	1
28	Motor Support	电机支架组件	01705252	01705252	1
29	Motor LW60B	电机 LW60B	15015205	15015205	1
30	Axial Flow Fan	轴流风叶	10335253	10335253	1
31	room sensor	室外环境感温包	\	39000219	1

The data are subuect to change without notice.

9.8.1 Explosive view of outdoor unit (for 120 model)

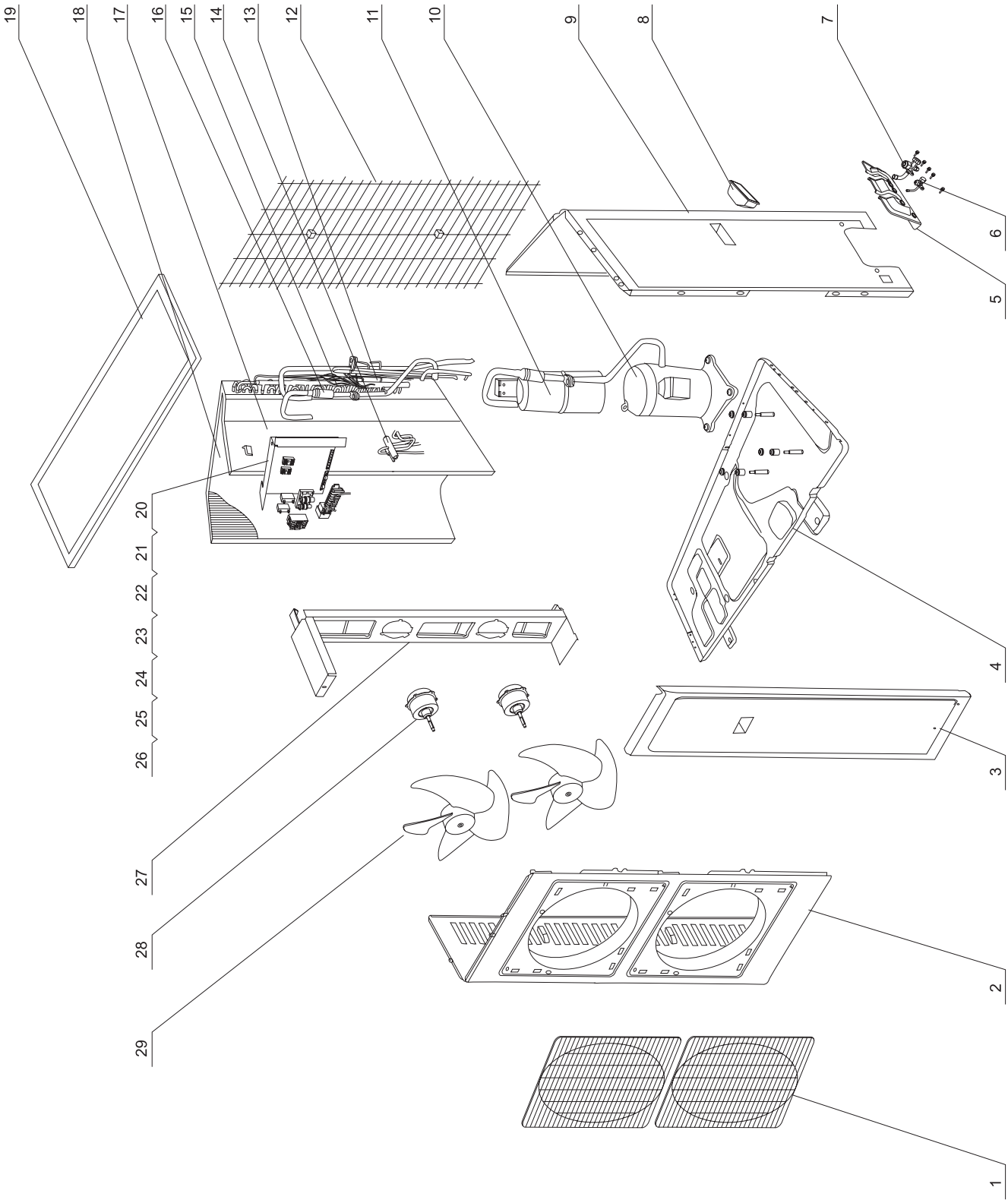

figure 9-9

9.8.2 Spare parts list of outdoor unit (for 120 model)

Table 9 -6

No.	Description		Part No.		Qty
			KF-120W/LEV	KFR-120W/LEV	
1	Front Grill	面罩组件	22265250	22265250	2
2	Front Plate	外罩	01435433	01435433	1
3	Front Side Plate	前侧板	01305431	01305431	1
4	Metal Base	底盘组件	01205432	01205432	1
5	Valve Support	阀门支架	01715256	01715256	1
6	Liquid Valve Assy	小阀门组件	07103701	07103701	1
7	Gas Valve Assy	大阀门组件	07105435	07105435	1
8	Handle	把手	26235251	26235251	1
9	Rear Side Plate	后侧板	01305434	01305434	1
10	Compressor C-SB373H8A	压缩机 C-SB373H8A	00100330	00100330	1
11	Gas-liquid Separator	汽液分离器部件	07225433	07225433	1
12	Rear Grill Assy	网罩	01475431	01475431	1
13	Low pressure switch	低压开关	46020007	46020007	1
14	4 way Valve	四通阀(含电磁线圈) STF-0408	\	43000317	1
15	pressure protect switch	压力保护开关 3.0/2.4MPa	46020003	46020003	1
16	Silencer	消音器	\	07245434	1
17	Isolation Sheet Assy	中间隔板组件	01235440	01235440	1
18	Condenser Assy	冷凝器部件	01105431	01105431	1
19	Top cover Assy	顶盖	01255262	01255262	1
20	Electric Box	电器盒组件	01415201	01415201	1
21	Capacitor	电容 3.5uF/450VAC	33010010	33010010	2
22	Terminal Board	接线板 T5A0A-94	\	42011210	1
22	Terminal Board	接线板 GT8FOA1	42011036	\	1
23	AC Contactor 3TF3211	交流接触器3TF3211	44010203	44010203	1
23	or LC1D1801M7C	或 LC1D1801M7C	44010211	44010211	1
24	over current protector UO-10- 13.2A	过流保护器 UO-10- 13.2A	46020102	46020102	1
24	or HD-13.2-22	或HD-13.2-22	46020112	46020112	1
25	phase reverse protector	逆相保护器	46020052	46020052	1
26	Terminal Board 2-8	接线板2-8	42011103	42011103	1
27	Motor Support	电机支架组件	01705433	01705433	1
28	Motor	电机LW68A	15015421	15015421	2
29	Axial Flow Fan	轴流风叶	10335253	10335253	2
30	ambient sensor	室外环境感温包	\	39000129	1
31	discharge temperature sensor	排气温度感温包	39000163	39000163	1
32	tube sensor	室外管温感温包	\	39000121	1

The data are subject to change without notice.

9.9 Iustallation guide

2.9 Installation Instructions

2.9.Place for installation

(1) Indoor unit

Avoid:

- Where inflammable gas may leak.
- Where there is excessive oily air.
- Where it is liable to be affected by in-coming air.
- Where there is direct sunlight.
- Where there is heat source nearby.
- Where free air flow may be blocked.
- Where there is high-frequency equipment(eg. high-frequency electric welder).
- Where acid solutions are frequently used.
- Where it is possible for the unit to get wet or damp.
- Installing fire alarm near the air outlet (in HEAT mode, the fire alarm may be wrongly activated when detecting the warm air breezing out of the unit).

- Please:
- Choose a suitable place so that conditioned air can reach every corner of the room.
- Install the unit on a solid and even ground that can bear the weight of the unit.
- Choose a place where the distance between the connecting pipe, drainage pipe and the outside is as short as possible.
- Leave enough space around the unit for air going in/out and maintenance(see Fig. 90):

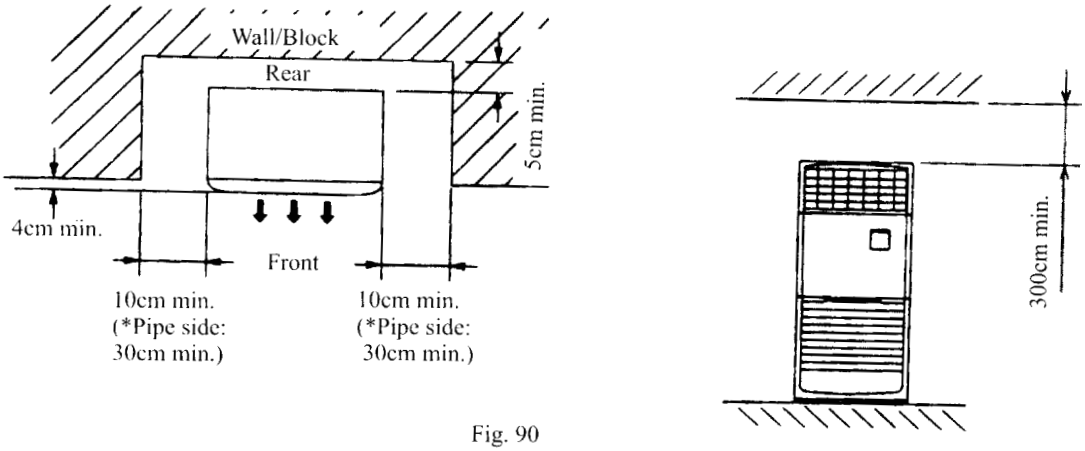

Fig. 90

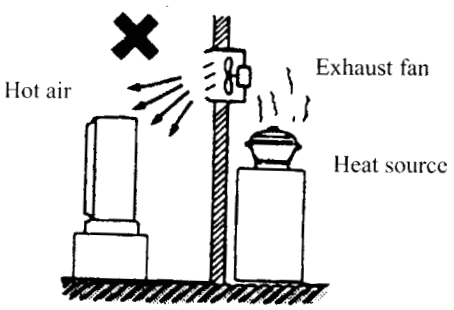

Fig. 91

(2) Outdoor unit

Avoid:

- Damp or uneven places.
- Heat source and exhaust fan, etc. (see Fig. 91)

Please choose a suitable installation place:

- Where it is as cool as possible and free of direct sunshine.
- Where there is good ventilation and outdoor temperature will not be higher than 43℃.
- Where noise coming from the unit will not annoy your neighbors.
- Where the hot air released by the unit will not reach passers-by.

• Where inflammable gas is unlikely to generate, flow in, stay or leak.
• Where there leaves enough space around the unit for free air flow and maintenance (see Fig. 92):

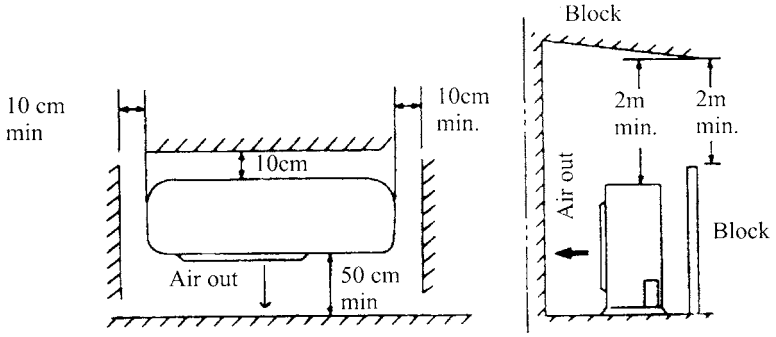

Fig. 92

• Have a base which is strong enough (eg. cement bricks, etc.), at least 15cm above the ground, so as to reduce dampness and protect the unit from water erosion, hence prolong its service life (see Fig. 93).

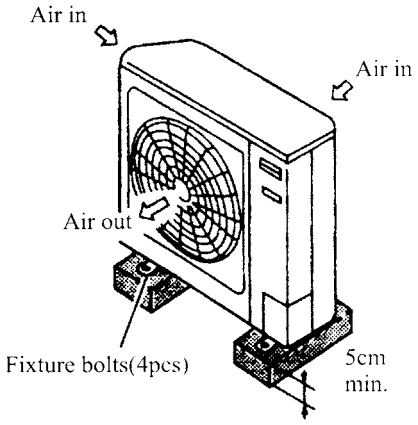

Fig. 93

• For cooling/heating type units, there will be water coming out of the unit while heating - please also take this into consideration while choosing installation place.

Note:1. If there are blocks around the unit, then the place is not suitable for installation(see Fig. 94)

2. If it is hard to find a space of 50cm min. between the air outlet and block near it, or if the air outlet is facing the road and may blow hot air to passers-by, please install an air guide to let the air comes out upwards (see Fig. 95).

3. When the outdoor unit is installed on the roof or a place where there isn't other buildings around, please do as illustrated below(see Fig. 96) to avoid strong wind blowing the air outlet directly, which may cause troubles to the unit.

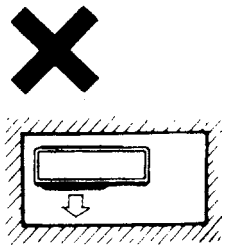

Fig. 94

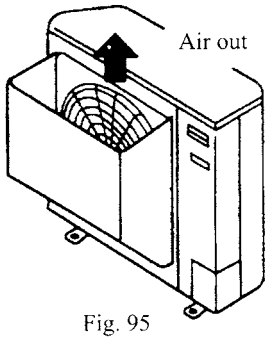

Fig. 95

• When there are walls around, please put the air outlet facing the wall (leaving a distance of 50 cm between unit and wall).

•When the air outlet may be affected by strong winds such as typhoon, please install an air guide (optional part provided per order)

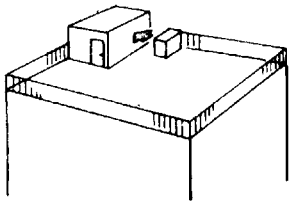

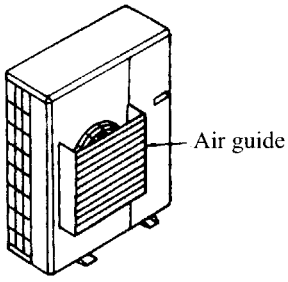

Fig. 96

2.9.2 Installation of the indoor/outdoor units

• Installation of the indoor unit:

(1) Choose a place for indoor unit installation as described in 2.9.1

(2) Use attached installation boards to fix the unit firmly to the wall and the ground (Fig. 97).

(3) Drill a passing hole through the wall (if the connecting pipe and wires are to go through the wall).

(4) Choose one of the four hole-positions (2 on the side and 2 on the rear)according to installation place (see Fig. 98), break it through and fit in passing hole cover for the passing of connecting pipe, drainage pipe and wires.

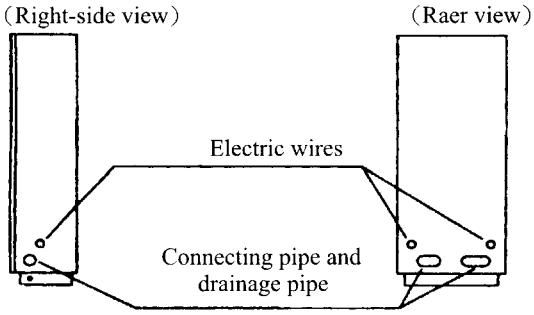

Fig. 98

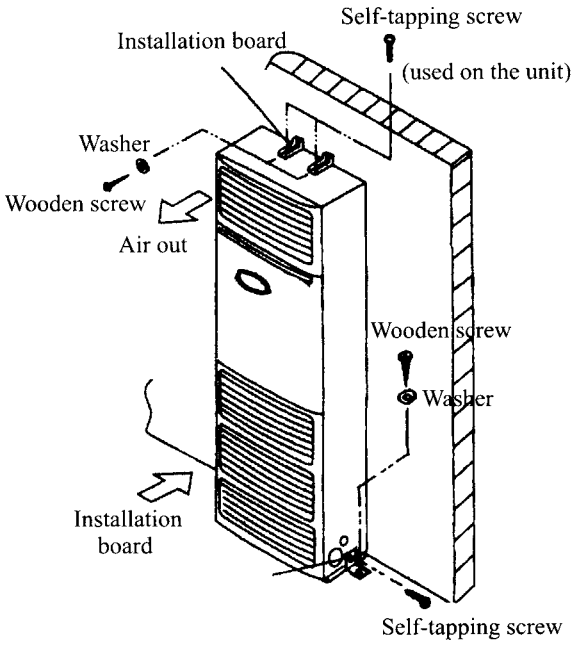

Fig. 97

Warning: Avoid areas where there are electric wires, gas pipes and other plumbing.

• Installation of the outdoor unit:

(1) Choose a place for outdoor unit installation as described in 2.9.1

(2) Cushion the unit with bricks or strong base at least 15cm thick.(see Fig 99)

(3) Use four bolts to fix the unit firmly to the bricks or base.

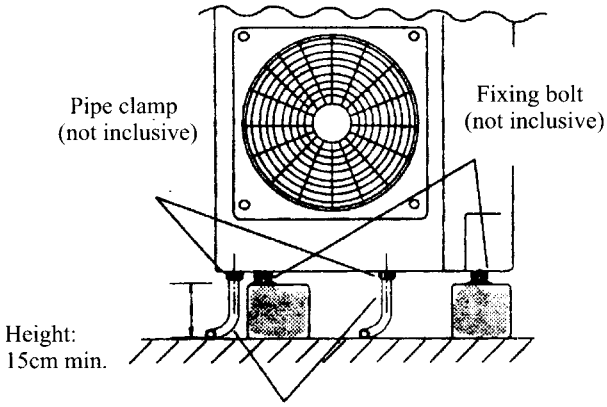

Fig. 99

2.9.3 Installation of the connecting pipe

• Cautions before installation:

(1) The connecting pipe is coiled into its package and must be loosen and straighten before installation.

(2) When doing this, let it go loose coil by coil naturally and do not pull it by force, or the pipe may be twisted (see Fig. 100)

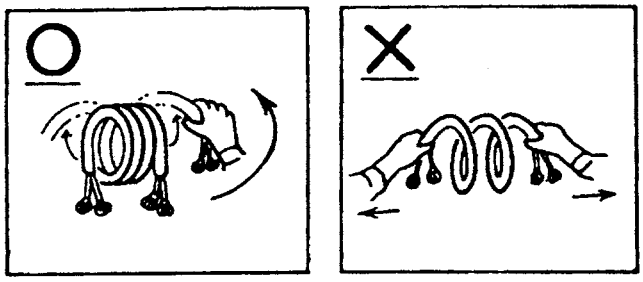

Fig. 100

(2) When bending the pipe, make sure that radius of the bend must be at least 10cm, or the pipe may get flat; once the pipe is bent, do not bend it back and forth repeatedly, or it may get twisted or crack (see Fig. 101)

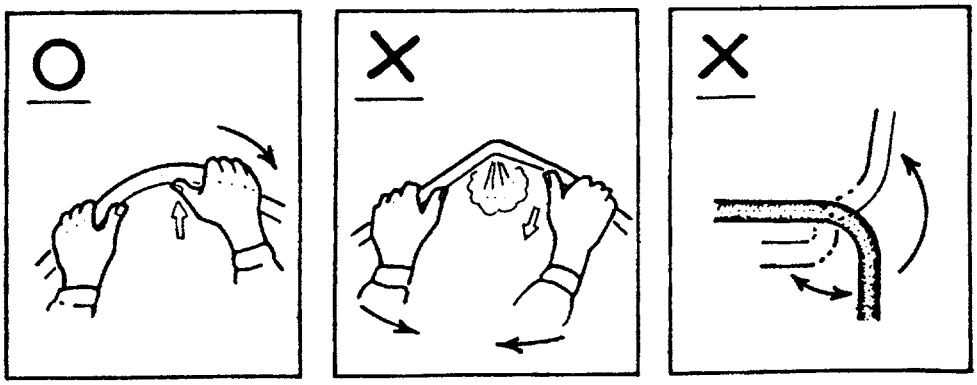

Fig. 101

•Connection of the pipe for indoor unit:

(1) Remove Air intake grille and lower front panel.

(2) Thread the connecting pipe through the passing hole of indoor unit, and fit it with the indoor unit pipe joint.

(3) Readjust shape of the pipe to make it easy for the joint, match center of both pipe joints and screw with hand for 3~5 circles (see Fig.102).

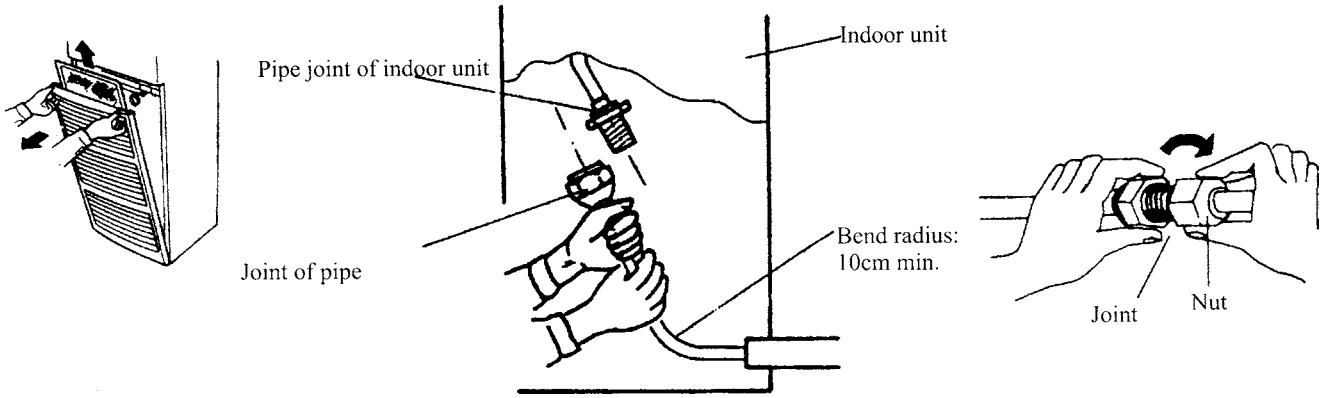

Fig. 102

(4) Tighten nuts with wrench (see Tab.36 for moment of force) until the wrench gives a crack(be careful don't make it too tight, or screw thread and nut of the joint may be damaged and cause leakage of refrigerant, see Fig.103).

• Connection of the pipe for outdoor unit:

(1) Put the outdoor pipe in order, if there is surplus pipe length, you canwind it around the unit and fix it properly.
(2) Remove bonnet of the stop valve.
(3) Match center of pipe with center of check valve joint, screw the joint nut with hand for several circles, and then tighten the cone nut properly with wrench.
(4) Remove check valve bonnet of the liquid valve and the gas valve.
(5) Release the spool of liquid valve with an inner-hexagon spanner, at the same time press the check valve spool of the gas valve with a screw-driver bit to exhaust.
(6) Keep on exhausting for about 15 seconds, and after refrigerant gas comes out, shut the check valve and fasten the bonnet.
(7) Fully open spool of the liquid valve and the gas valve (see Fig. 104).
(8) Fasten the valve bonnet, and then check with soap water or leak-detector to see if there is leaking in the connection between the pipe and the outdoor unit.

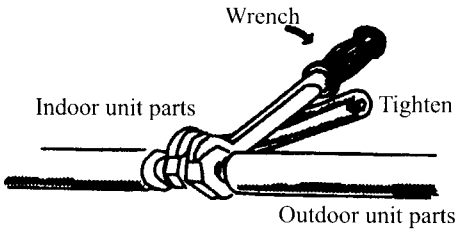

Fig 103

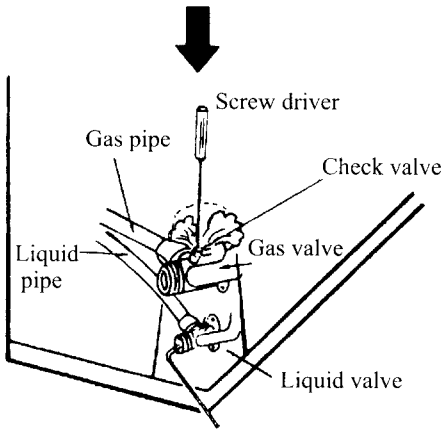

Fig 104

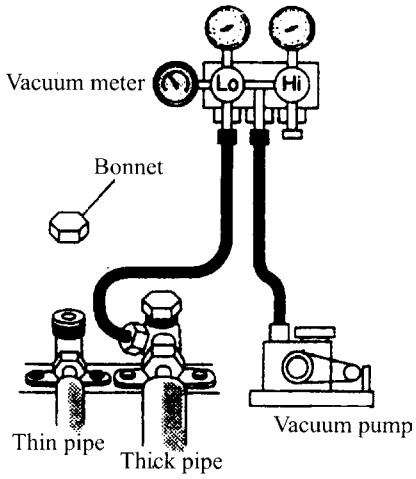

Fig 105

(9) If possible, exhaust air in the unit from the check valve with a vacuum pump(see Fig. 105).

a. Remove check valve bonnet of thick pipe.
b. Connect vacuum meter pipe to check valve joint of thick pipe.
c. Connet vacuum meter pipe to one end of pressure-resistant pipe, and connect its other end to vacuum pump.
d. Tighten high-pressure meter and open low pressure meter, then plug vacuum pump to power source.
e. When arm of vacuum meter points to about 15mmHg, tighten low pressure meter and turn off power, then remove pressure-resistant pipe that is connected to check valve of the thick pipe gas valve and fasten the bonnet.

•Wrapping the connecting pipe

(1)To avoid condensation dew and leakage of water, the thick pipe and thin pipe should be wrapped with thermal insulation material and gummed tape for insulation (see Fig. 106).

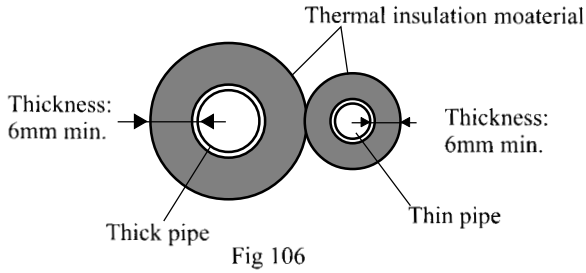

Fig 106

(2) Wrap the nut connecting the thick pipe and thin pipe with thermal insulation material and gummed tape, and then fix the thick pipe and thin pipe with clip.

2.9.4 Drainage pipe connecting

(1) Use PVC pipe and thread it through one of the four passing holes of the indoor unit and connect it to drainage pipe joint. Ues binder to bind the joint tightly to avoid leaking.

(2) The drainage pipe must be sloped downwards to prevent water from accumulating in the pipe.

(3) Use thermal insulation tape to wrap the joint (see Fig. 108)tightly.

(4) After finishing connection, insert water pipe to the right side of air outlet (see Fig. 109) and charge water gently to side plate of heat exchanger or inner wall of the unit. Charge 1000ml of water to check if the drainage is OK or if there is leakage.

Note:please operate this step with care while the indoor unit is with electric heater so that the electric heater will not get wet.

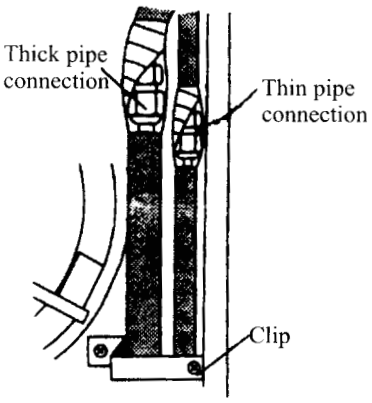

Fig 107

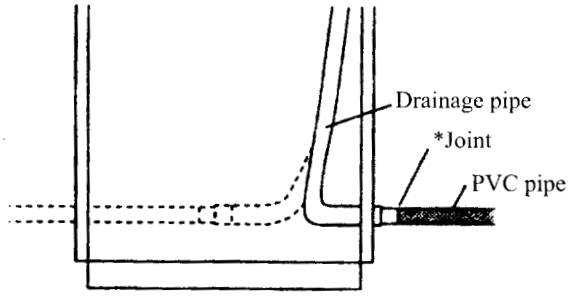

Fig 108

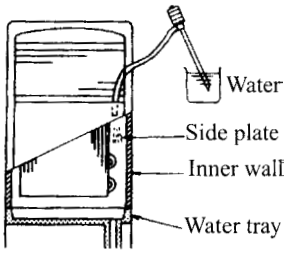

Fig 109

2.9.5 Wire connecting

- Before connecting the wires, please pay attention to the voltage listed on the nameplate, and then connect the wires according to the circuit diagram.
- Special power supply plug and switch must be used for the unit, and electricity switch and air switch must be included to deal with situation of an overload.
- Use a proper earth wire for the unit to prevent danger caused by possible ineffective insulation. ALL wire connecting must be done strictly according to the citrcuit diagram. Incorrect wiring may abnormal operation of or damage to the unit.
- Do not let the wires touch the connecting pipe and moving parts such as compressor and motor. Altering the interior wiring could be very DANGEROUS, and the manufacturer shall not be held responsible for property loss or malfunctioning caused by such alterations.
- If the unit is installed at a place liable to be affected by electric/electromagnetic interference, it is advisable to use shielded/double-wrung wires.
- Before connecting, please check thoroughly the control wire of indoor unit and power supply, etc.
- The wire connection must be done by qualified electricians.

Indoor/outdoor wire connecting (see Fig. 110 and Fig. 111)

- Remove screws from electric box to reveal the electric box.
- L1 and N1 are indoor power supply wires, A and N2 are outdoor power supply wires.

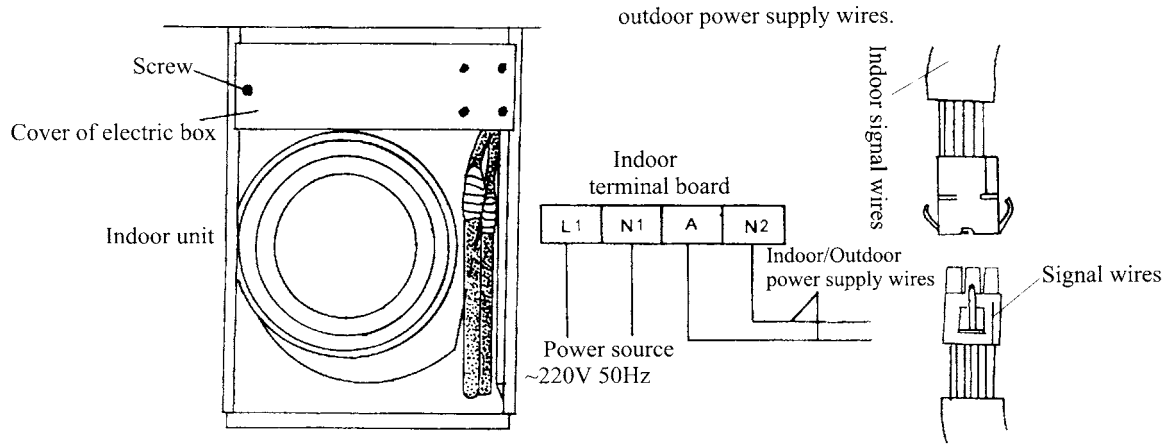

Fig. 110

- Remove front plate.
- Break through the passing hole and put on the square passing ring.
- Pull out the wires from terminal board of the outdoor unit, thread them through the outdoor passing hole and indoor passing hole, and connect them to the terminal board of the indoor unit.

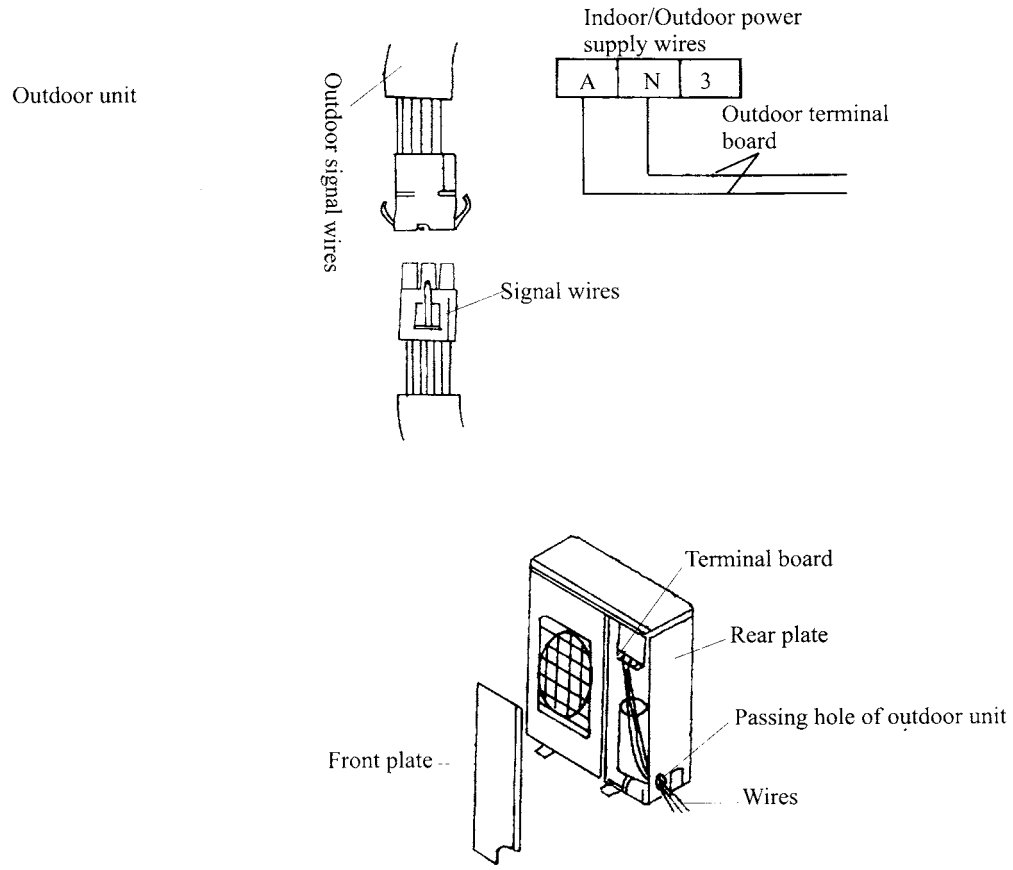

Fig. 111

9.10 Circuit diagram

These circuit diagrams are subject to change without notice.

Please refer to the ones stuck on the machines.

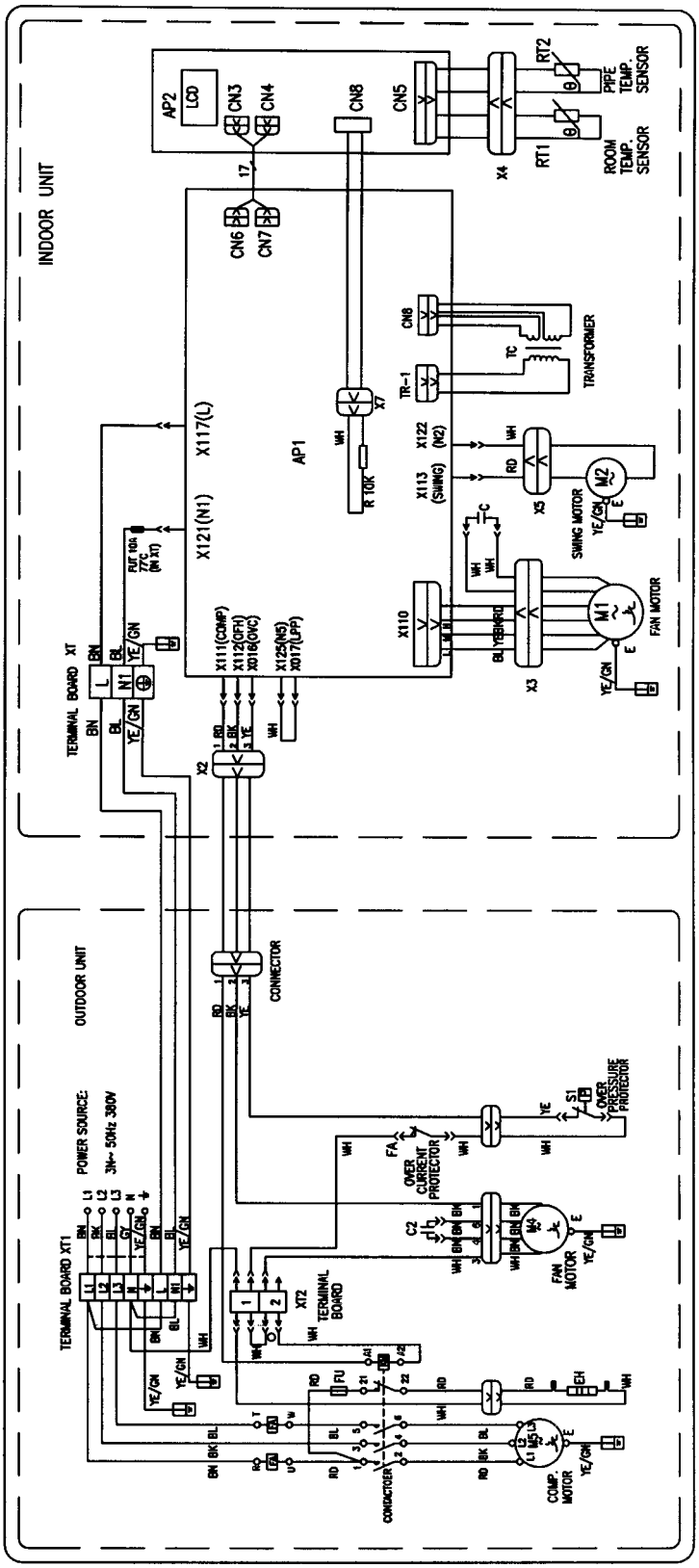

KF-70LW/E(7033L)D

figure 9-10

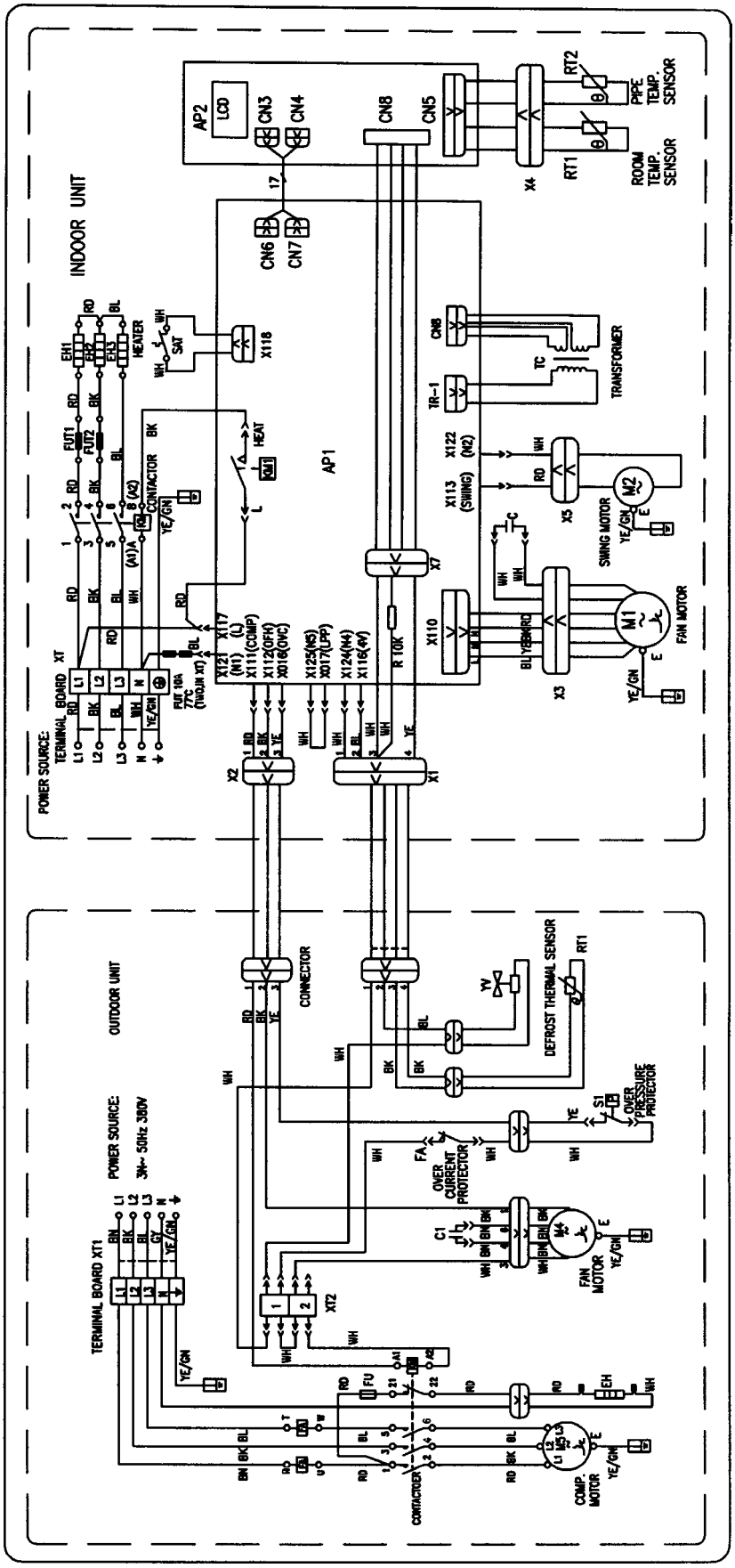

KFR-70LW/E(7053L)D

figure 9-11

KF-70LW/E (7032LA)D
KF-120LW/E (1232LA)V

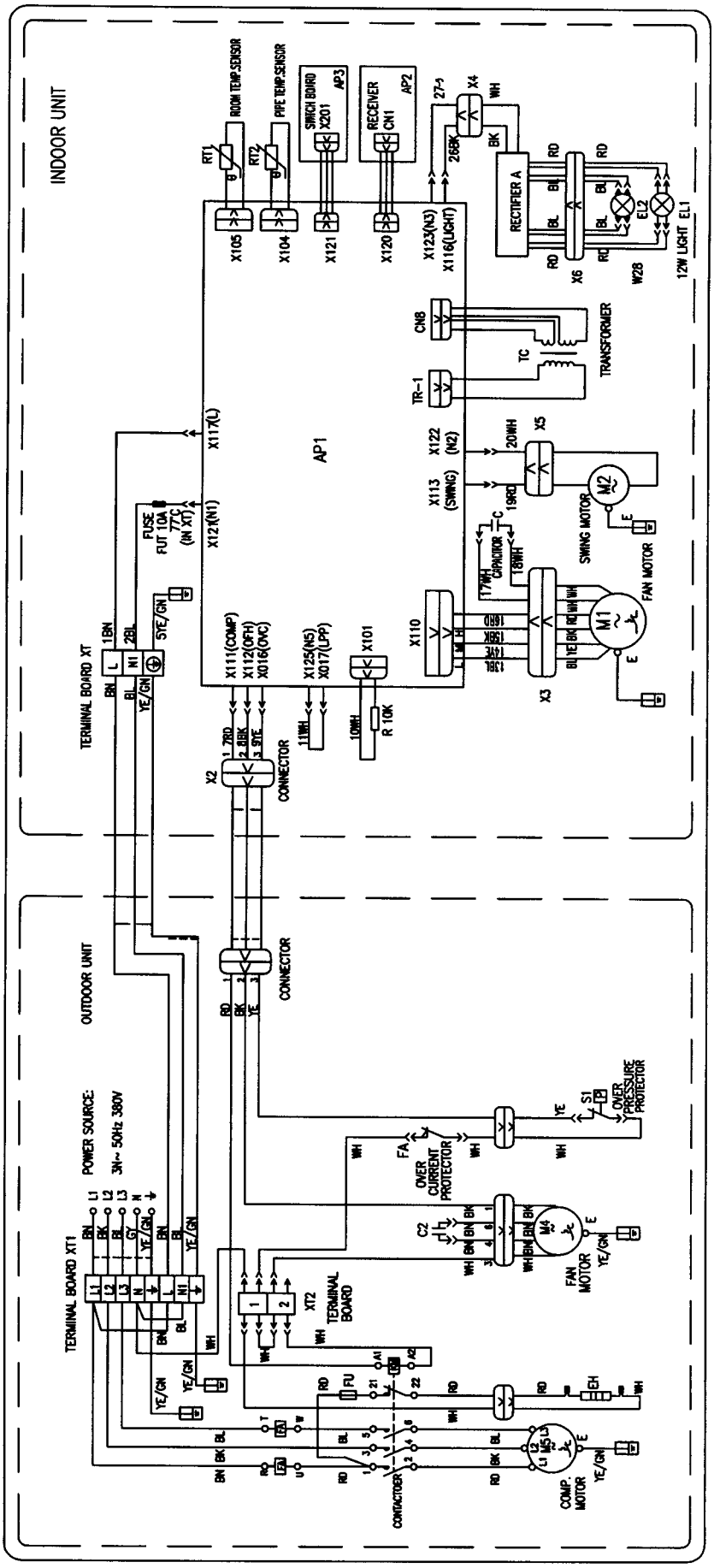

figure 9-12

KFR-70LW/E(7052LA) D
KFR-120LW/E(1252LA) V

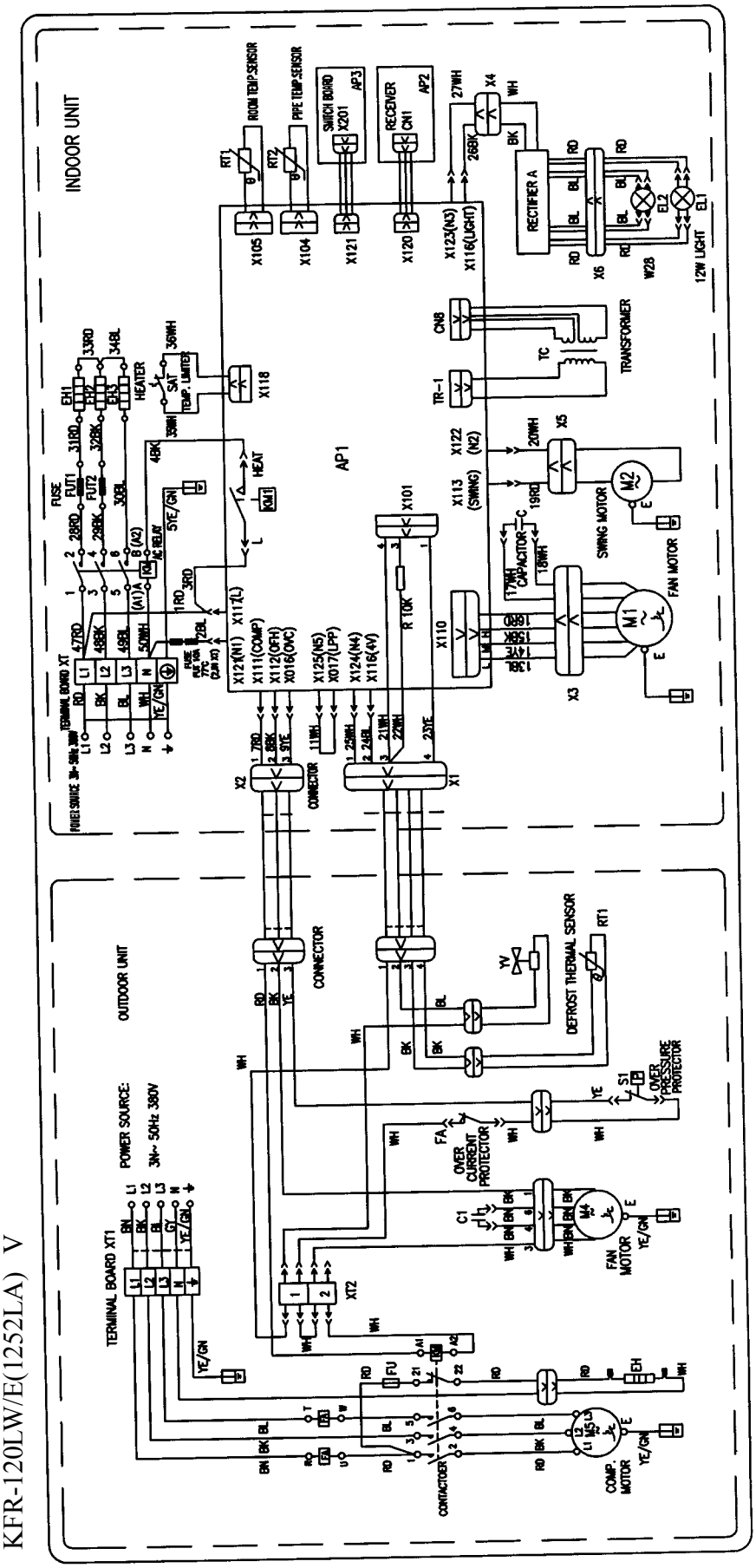

figure 9-13

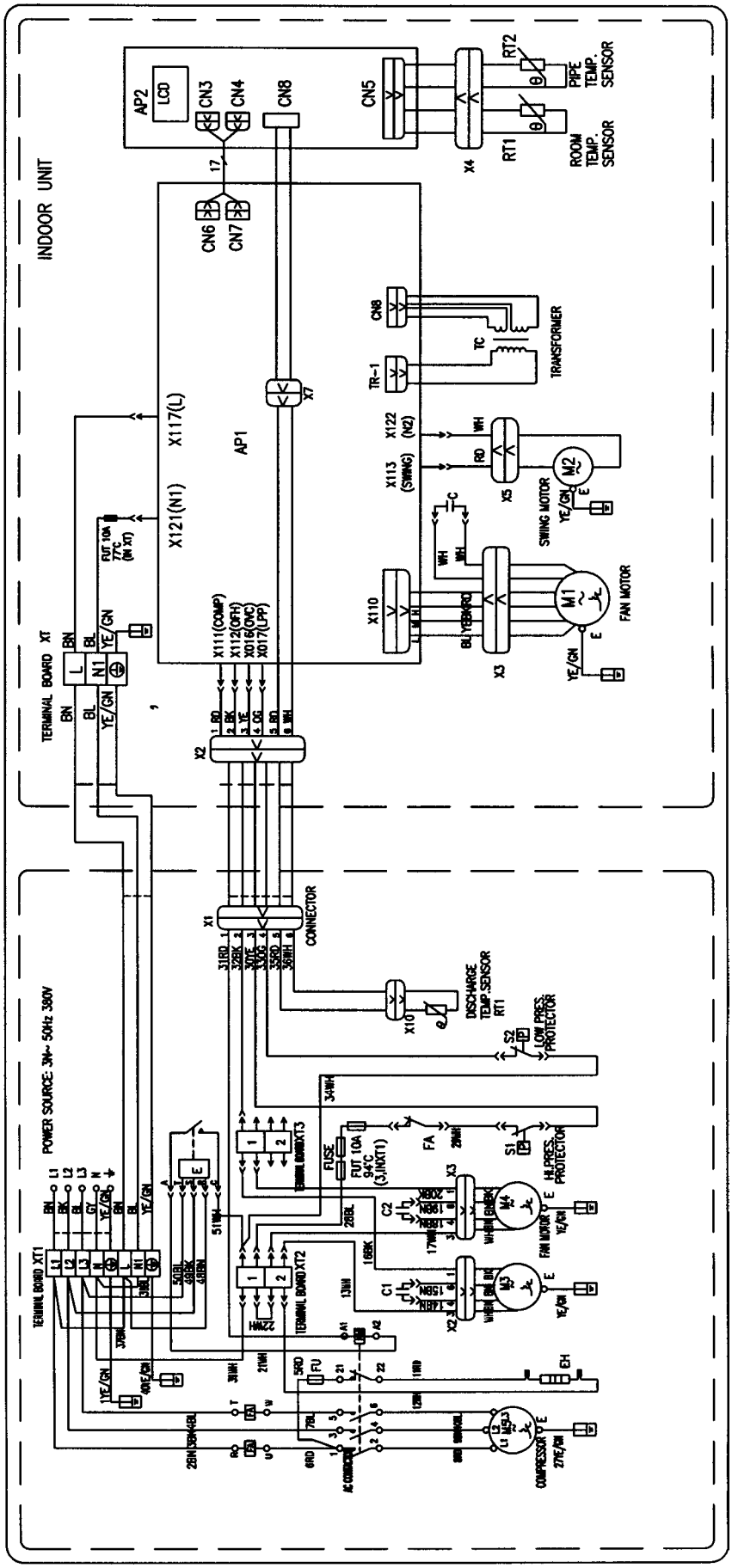

KF-120LW/E(1233L) V

figure 9-14

KFR-120LW/E(1253L) V

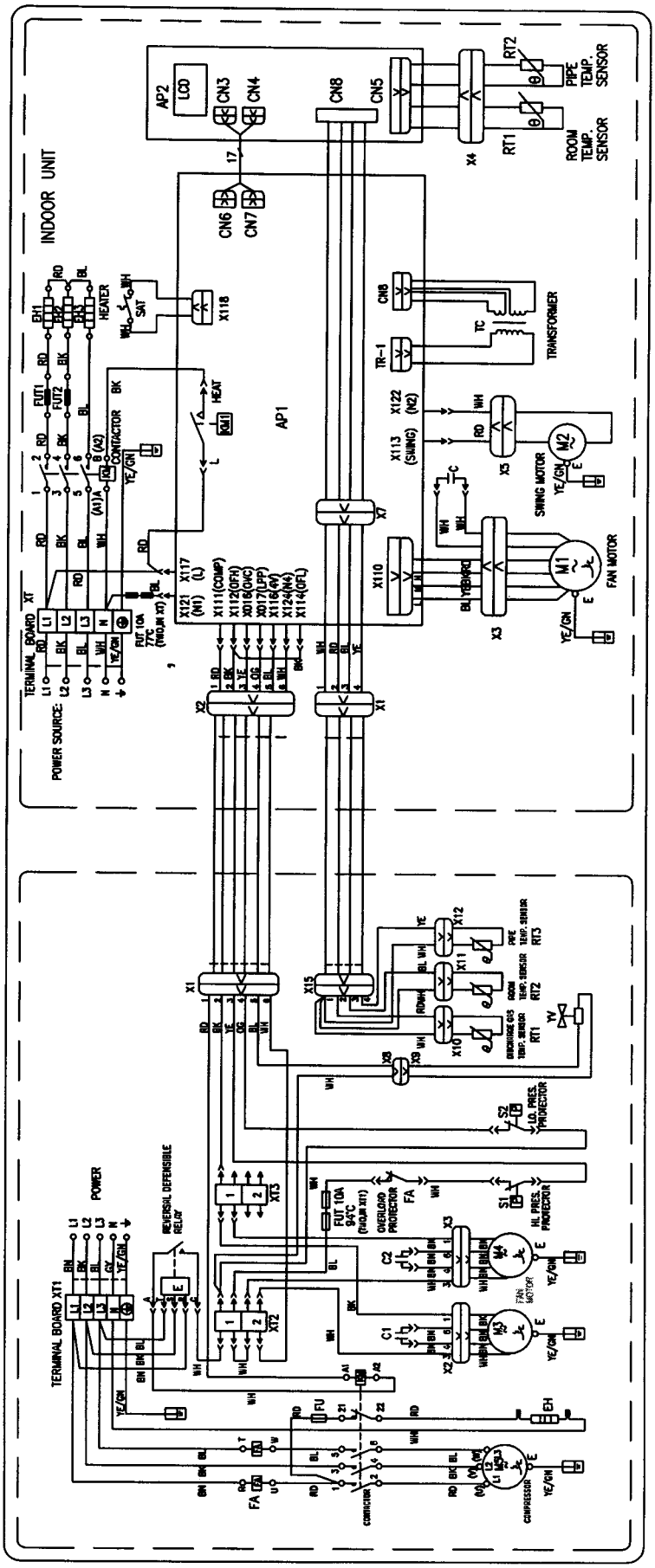

figure 9-15

9.11 PCB function manual

The PBC function manual of the floor standing A/C (new)

1. **Running mode:**
   1) COOL; 2) DRY; 3) FAN; 4) HEAT; 5) AUTO.
2. **Controlling contents:**
   1) indoor unit fan motor(high, middle and low speed);
   2) sweep fan motor;
   3) electrical heater;
   4) outdoor unit fan motor(high and low);
   5) reversing valve;
   6) compressor;
   7) light (only for the models having light);
   8) fresh air fan motor;
   9) anion creator.
3. **The parameter to be input:**
   1) the ambient temperature of the indoor unit (shorten form is T_{in});
   2) the evaporator temperature of the indoor unit (shorten form is T_{eva});
   3) the condenser temperature of the outdoor unit (shorten form is T_{con});
   4) the ambient temperature of the outdoor unit (shorten form is Tout);
   5) the temperature of the gas output from the compressor (shorten form is T_{output}).
4. **The different controlling mode for the different function mode:**
   Under all of the modes, the compressor will continue work for 6 min once it starts. And it will be restart in 3min after it stops. At the beginning, the indoor unit fan motor runs for 8sec in high speed then change to the set fan speed; and it is same in the outdoor unit.
   1) Cooling mode:
      If $T_{in} \geqslant T_{set}-1$℃, cooling mode act, compressor and outdoor unit run, and indoor unit run in the set speed;
      If $T_{in} \geqslant T_{set}-1$℃, the unit will be stop from cooling mode, compressor and outdoor unit stop, and indoor unit still run in the set speed;
      If $T_{set}-1$℃ $< T_{in} < T_{set}+1$℃, keep running in the old mode;
      In the cooling mode, the range of T_{set} is 16℃~30℃, the initialize is 25℃
   2) Drying mode:
      If $T_{in} > T_{set}+2$℃, drying mode act, compressor, indoor unit fan motor and outdoor unit fan motor run, The indoor unit fan motor runs in low speed;
      If $T_{set}-2$℃ $\leqslant T_{in} \leqslant T_{set}+2$℃, compressor, indoor unit fan motor and outdoor unit fan motor run for 6min, then stop for 4min, then run by this cycle. The indoor unit fan motor runs in low speed;
      If $T_{in} < T_{set}-2$℃, compressor, outdoor unit fan motor and indoor unit fan motor stop.
      In drying mode, the range of T_{set} is 16℃~30℃, the initialize is 25℃, the outdoor fan motor runs in high speed.
   3) Heating mode:
      If $T_{in} \leqslant T_{set}-1$℃, heating mode act, reversing, compressor and outdoor unit fan motor run, indoor unit fan motor runs in the set speed and the condition of avoiding the cold wind;
      If $T_{in} \geqslant T_{set}+1$℃, compressor and outdoor unit fan motor stop, reserving valve is still electric ,the indoor unit fan motor runs in the set speed and flow the rest heat;
      If $T_{set}-1$℃ $< T_{in} < T_{set}+1$℃, keep running in the old mode;

In the heating mode, the range of T_{set} is 16℃~30℃, the initialize is 25℃.
In the heating mode, the 4-way valve will be electroless in 2min after the unit is turned off.

The working condition of the outdoor unit:

If $T_{out} \geqslant 16$℃, the outdoor unit fan motor runs in low speed;
If $T_{out} \leqslant 13$℃, the outdoor unit fan motor runs in high speed;
If 13℃ > T_{out} > 16℃, the outdoor unit fan motor runs in the old speed;
The outdoor unit fan motor stop when it is defrosting.

The conditions of avoiding cold wind:

Once the compressor work, either $T_{eva} \geqslant 30$℃ or the compressor running for over 10sec, the indoor unit fan motor will start.

The conditions of flowing hot wind:

Once the compressor is stop, the indoor unit fan motor runs in low speed and will stop too in 10sec.

The conditions of beginning defrosting:

After the unit continue heating for 44min or if $T_{con} \leqslant -5$℃, the defrosting mode act, the reversal valve, the indoor and outdoor unit stop.
If there is electrical heater in the unit, then it will be stop first and the reversal valve, the indoor and outdoor unit stop in 1min.

The conditions of stopping defrosting:

After the unit continue defrosting for 10min or if $T_{con} \geqslant 10$℃, the defrosting stop, the reversal valve, the outdoor unit run, and the indoor unit fan motor will run in the the condition of avoiding the cold wind.
The working condition of electrical heater:
When the indoor unit is running, and $T_{eva} \leqslant 44$℃ and $T_{in} \leqslant 23$℃, and $T_{in} \leqslant T_{set}$-2℃, the electrical heater act.
When the indoor unit is stop, or $T_{eva} \geqslant 52$℃ or $T_{in} \geqslant 26$℃, or $T_{in} \geqslant T_{set}$, the electrical heater stop and will restart in 2min.

4) Fanning mode:

The indoor unit fan motor runs in the set fan speed:

The range of is 16℃~30℃, the initialize is 25℃.

5) Auto mode:

It runs according the T_{in}.
If $T_{in} \geqslant 26$℃, cooling mode act, the T_{set} is 26℃ automatically.
If 20℃ $\leqslant T_{in} \leqslant$ 26℃, drying mode act, the T_{set} is 24℃ automatically.
If $T_{in} \leqslant 20$℃, heating mode act, the T_{set} is 20℃ automatically till $T_{in} \geqslant 24$℃.
If the unit is cooling only, if $T_{in} \leqslant 20$℃, fanning mode act, the T_{set} is 20℃ automatically till $T_{in} \geqslant 24$℃.
Once the each mode act, it will be in 30sec to change to the auto mode according the T_{in}.

5. Timer and sleep mode:

1) Sleep mode:

If it is cooling or drying, in 1hour of the beginning, the T_{set} will be increased 1℃, and it will be increased 1℃ after 2hour, then the unit runs in this temperature.

If it is heating, in 1hour of the beginning, the T_{set} will be decreased 1℃, and it will be decreased 1℃ after 2hour, then the unit runs in this temperature.
There is no sleep mode when fanning and auto mode act.

2) Timer for Turn on:
The unit is stop when the timer for turn on is acted, when it time to turn on, the controller will act in the set mode. The distance of setting twice is 0.5hour and the range time is 0.5~24hour.

3) Timer for Turn off:
The unit is run when the timer for turn off is acted, the unit is stop when it time to turn off. He distance of setting twice is 0.5hour and the range time is 0.5~24hour.

6. Fresh air and Anion function:

1) Fresh air function:(it's unavailable when it is turned off)
This mode act when the button of "fresh air" is pressed once and the indoor unit fan motor is run (or received the signal of "fresh air" or "fresh air 2" of the remote controller); and it will stopped when the button is pressed once again.

2) Anion function: (it's unavailable when it is turned off)
This mode act when then button of "anion" is pressed once and the indoor unit fan motor is run.

7. Other functions:

1) Sweeping:
It is controlled by the button of "sweep" on the remote controller. It is available when the indoor unit fan motor is run.

2) Light (just for the models with light):
It is controlled by the button of "light" on the remote controller. It is available at any moment.

3) Buzzer function:
It will be act when the controller is turned on or received a right signal.

4) Auto fan speed of indoor unit:
When heating act:
If $T_{in} \geqslant T_{set}$, the indoor unit fan motor runs in low fan speed;
If $T_{set}-3℃ \leqslant T_{in} < T_{set}$, it is middle fan speed;
If $T_{in} < T_{set}-3℃$, it is high fan speed.
When cooling act:
If $T_{in} < T_{set}$, it is low fan speed;
If $T_{set} < T_{in} \leqslant T_{set}+3℃$, it is middle fan speed;
If $T_{in} > T_{set}+3℃$, it is high fan speed.
When fanning act:
If $T_{in} < T_{set}$, it is low fan speed;
If $T_{set} < T_{in} \leqslant T_{set}+3℃$, it is middle fan speed;
If $T_{in} > T_{set}+3℃$, it is high fan speed.
The indoor unit fan motor will run by the rules till it runs for 30sec after the unit is turned on.

5) Indicator light:
It flashes once when the unit is turned on and it will be flashing when:
Defrosting, avoiding the cold wind, protecting of the compressor in high-pressure, protecting of the compressor in low-pressure, protecting of the low power supply, protecting of the high-temperature of the compressor outlet pipe, cooling forcibly, heating forcible (just for LCD).

10.Window type Series

10.1 Summary.

MODEL	NOTE
KC-18/C1	1Ph 220-230V~50Hz R22 Mechanical control
GJ7-22L	1Ph 220V~60Hz R22 Mechanical control
GJ7-12L	1Ph 115V~60Hz R22 Mechanical control
KC-20/C1 KC-25/C1 KCD-25/C1	1Ph 220-230V~50Hz R22 Mechanical control
GJ10-22LM GJ10-22RM	1Ph 220V~60Hz R22 mechanical control
GJ10-12LM	1Ph 115V~60Hz R22 mechanical control
KC-25/C1A KCD-25/C1A	1Ph 220-230V~50Hz R22 Remete control
GJ10-22L GJ10-22R	1Ph 220V~60Hz R22 Remete control
GJ10-12L	1Ph 115V~60Hz R22 Remete control

figure 10-1

Window type Series

MODEL	NOTE
KC-32/C1 KCD-32/C1	1Ph 220-230V~50Hz R22 Mechanical control
GJ12-22LM	1Ph 220V~60Hz R22 Mechanical control
GJ12-12LM	1Ph 115V~60Hz R22 Mechanical control
KC-32/C1A KCD-32/C1A	1Ph 220-230V~50Hz R22 Mechanical control
GJ12-22L	1Ph 220V~60Hz R22 Mechanical control
GJ12-12L	1Ph 115V~60Hz R22 Mechanical control
KC-46/C1	1Ph 220-230V~50Hz R22 Mechanical control
KC-46/C1A KCR-46/C1A KC-60/C1A	1Ph 220-230V~50Hz R22 Remote control

figure 10-2

10.2 Technical specifications.

Table 10-1

Model		KC-20/C1	KC-25/C1	KCD-25/C1	KC-25/C1A	KCD-25/C1A
Function		cooling	cooling	cooling/heating	cooling	cooling/heating
Power supply		1Ph 220-230V~50Hz				
Control mode		Mechanical control	Mechanical control	Mechanical control	Remote control	Remote control
Capacity(W)		2000	2500	2500	2500	2500/2200
Rated input power(W)		800	1020	1020/2300	1020	1020/2300
Rated current(A)		3.6	4.8	4.8/10	4.8	4.8/10
Air flow(m^3/h)		350	380	400	380	400
Dehumidifying volume(L/h)		1.19	1.19	1.19	1.19	1.19
EER(W/W)		2.3	2.4	2.4	2.4	2.4
Indoor side	Fan type/piece	Centrifugal fan/1				
	Diameter-length	180-85	180-85	180-85	180-85	180-85
	Evaporator	Aluminum-copper				
	Row-fin distance(mm)	2-1.3	2-1.3	2-1.3	2-1.3	2-1.3
	Working area(m^2)	0.074	0.074	0.074	0.074	0.074
	Swing motor	SM021	SM021	SM021	SM021	SM021
	Input-speed	2.5W-6r/min	2.5W-6r/min	2.5W-6r/min	2.5W-6r/min	2.5W-6r/min
	Noise(dB(A))	48	50	50	50	50
Outdoor side	Compressor type	Rotary				
	Compressor model	2P14S225A NC	2P17C225C NB	2P17C225C NB	2P17C225C NB	2P17C225C NB
	Compressor input Power(W)	700	910	910	910	910
	L.R.A.(A)	18	20	20	20	20
	Protection device	External overload protector				
	Starting method	Capacity				
	Working temp.	⩽ 115℃				
	Condenser	Aluminum-copper				
	Row-fin distance(mm)	2-1.8	2-1.8	2-1.8	2-1.8	2-1.8
	Working area(m^2)	0.12	0.12	0.12	0.12	0.12
	Fan type-piece	Axial flow fan-1				
	Fan diameter(mm)	310	310	310	310	310
	Throttling method	Capillary				
	Noise(dB(A))	54	55	55	55	55
Motor fan speed(rpm)		1080	1100	1100	1100	1100
Working capacitor(μF)		3 μF/450V45	3.5 μF/450V45	3.5 μF/450V45	3.5 μF/450V45	3.5 μF/450V45
Output power(W)						
Dimension (width-height-depth)(mm)		450 × 350 × 580				
Net weight(Kg)		32	35	36	35	36
Refrigerant charge		R2/400g	R22/550g			

The technical date are subject to change without notice .Please refer to the nameplate of the unit.

Table 10-2

Model		KC-32/C1	KC-32/C1A	KCD-32/C1	KCD-32/C1A
Function		Cooling	Cooling	Cooling/Heating	Cooling/Heating
Power supply		1Ph,220-230V~50Hz			
Capacity	(W)	3200	3200	3200/2600	3200/2600
	(BTU/h)	10922	10922	10922/8874	10922/8874
Rated input(W)		1390	1390	1390/2800	1390/2800
Rated current(A)		6.5	6.5	7/12.5	7/12.5
Air flow(m^3/h)		430	430	420	420
Dehumidifying volume(L/h)		1.6	1.6	1.6	1.6
EER(W/W)		2.4	2.4	2.4	2.4
Indoor side	Fan type/piece	Centrifugal fan-1			
	Diameter-length	Φ 217-90			
	Evaporator	Aluminum fin-copper tube			
	Row-fin distance(mm)	2-14	2-14	2-1.7	2-1.7
	Working area(m^2)	0.11			
	Swing motor	SM002			
	Input(W)	4			
	Fuse(A)	Controller3.15A			
	Working capacitor(μF)	3.5 μF/450V	3.5 μF/450V	3 μF/450V	3 μF/450V
	Noise(dB(A))	51	51	51	51
Outdoor side	Compressor	C-RV222H1AA	C-RV222H1AA	C-RV222H1AA	C-RV222H1AA
	L.R.A.(A)	31	31	31	31
	Throttling method	Capillary			
	Starting method	Capacitor starting			
	Working temp.	⩽ 115℃			
	Condenser	Aluminum fin-copper tube			
	Pipe-diameter	9.52			
	Row-fin distance(mm)	2-1.8	2-1.8	2-1.7	2-1.7
	Working area	0.16			
	Type-piece	Axial fan-5			
	Diameter(mm)	325			
	Defrosting method	Auto defrost			
	Noise(dB(A))	57			
Motor fan speed(rpm)		970/900/850			
Output power(W)		60			
Dimension(width-height-depth)(mm)		570 × 380 × 590			
Net weight(Kg)		45			
Refrigerant charge		R22/670g			

The technical date are subject to change without notice .Please refer to the nameplate of the unit.

Table 10-3

Model		KC-18/C1	KC-60/C1A	KC-46/C1	KC-46/C1A	KCR-46/C1A
Function		cooling	cooling	cooling/heating	cooling	cooling/heating
Power supply		1Ph 220-230V~50Hz				
Control mode		Mechanical control	Remote control	Mechanical control	Remote control	Remote control
Capacity(W)		1800	6000	4600		4600/5000
Rated input power(W)		830	2600	1940		
Rated current(A)		3.8	11.8	8.8		
Air flow(m^3/h)		280	750	580		
Dehumidifying volume(L/h)		0.7	2.4	2.0		
EER(W/W)		2.2	2.3	2.4		
Indoor side	Fan type/piece	Centrifugal fan/1				
	Diameter-length	180-70	210-107	210-107		
	Evaporator	Aluminum-copper				
	Row-fin distance(mm)	3-1.5	3-1.5	2-1.4		3-1.5
	Working area(m^2)	0.065	0.15			
	Swing motor	/	SM010			
	Input-speed	/	5W-6r/min			
	Noise(dB(A))	56	58	56		
Outdoor side	Compressor type	Rotary				
	Compressor model	C-1R67H4P	QP407JT24A	SHY33MC4-U		
	Compressor input Power(W)	700	2300	1730		
	L.R.A.(A)	18	＜60	36		
	Protection device	External over-load protector	internal overload protector			
	Starting method	By capacity				
	Working capacitor(μF)	20 μF/450V	45 μF/400V	50 μF/450V		
	Working temp.	⩽115℃				
	Condenser	Aluminum-copper				
	Row-fin distance(mm)	2-1.5	3-1.8	2-1.8		3-1.8
	Working area(m^2)	0.118	0.23			
	Fan type-piece	Axial flow fan-1				
	Fan diameter(mm)	260	400			
	Throttling method	Capillary				
	Noise(dB(A))	59	65	63		
Motor fan speed(rpm)		1050	950	900		
Working capacitor(μF)		2.5 μF/450V	9 μF/450V	7 μF/450V		
Output power(W)		30	165			
Dimension (width-height-depth)(mm)		472×398×323	660×430×740			
Net weight(Kg)		25	70	66		68
Refrigerant charge		R22 400g	R22/1400g	R22/1000g		R22/1100g

The technical date are subject to change without notice .Please refer to the nameplate of the unit.

Table 10-4

Model		GJ7-22L	GJ7-12L	GJ10-12LM	GJ10-12L
Function		Cooling	Cooling	Cooling	Cooling
Power supply		1Ph-220V~60Hz	1Ph 115V~ 60Hz		
Control mode		Mechanical control	Mechanical control	Mechanical control	Remote control
Capacity(W)		1800	1800	2500	2500
Rated input power(W)		780	765	1030	1030
Rated current(A)		3.6	6.8	8.4	8.4
Air flow(m^3/h)		280	280	350	340
Dehumidifying volume(L/h)		0.7	0.7	1.19	1.19
EER(W/W)		2.3	2.35	2.4	2.4
Indoor side	Fan type/piece	Centrifugal fan/1			
	Diameter-length	180-70	180-70	180-85	180-85
	Evaporator	Aluminum-copper			
	Row-fin distance(mm)	3-1.5	3-1.5	3-1.5	3-1.5
	Working area(m^2)	0.065	0.065	0.074	0.074
	Swing motor	\	\	SM021U	SM021U
	Input-speed	\	\	2.5W-6r/min	2.5W-6r/min
	Noise(dB(A))	52	52	48	48
Outdoor side	Compressor type	rotary			
	Compressor model	C-1R51H6L	C-1R51H2L	2P14S126B1L	2P14S126B1L
	Compressor input power(W)	700	690	950	950
	L.R.A.(A)	18	30	35	35
	Protection device	External overload protector			
	Starting method	By capacity			
	Working capacitor(μF)	17.5 μF/450V	25 μF/450V	40 μF/450V	
	Working temp.	⩽ 115℃			
	Condenser	Aluminum-copper			
	Row-fin distance(mm)	2-1.5	2-1.5	3-2.0	3-2.0
	Working area(m^2)	0.118	0.118	0.12	0.12
	Fan Type-pipece	Axial flow fan-1			
	Fan diameter(mm)	260	260	310	310
	Throttling method	Capillary			
	Noise(dB(A))	53	53	54	54
Motor fan speed(rpm)		1050	1050	1050	1050
Working capacitor(μF)		2 μF/450V	7 μF/450V	9 μF/450V	9 μF/450V
Output power(W)		30	30	45	45
Dimension(width-height-depth)(mm)		472 × 323 × 398		450 × 350 × 580	
Net weight(Kg)		25	25	35	35
Refrigerant charge		R22/400g	R22/400g	R22/600g	R22/600g

The technical date are subject to change without notice .Please refer to the nameplate of the unit.

Table 10-5

Model		GJ10-22LM	GJ10-22RM	GJ10-22L	GJ10-22R
Function		Cooling	Cooling/heating	Cooling	Cooling/heating
Power supply		1Ph 220V~ 60Hz			
Control mode		Mechanical control	Mechanical control	Remote control	Remote control
Capacity(W)		2500	2500-2380	2500	2400/2900
Rated input power(W)		996	996/2480	996	1030/1320
Rated current(A)		4.5	4.5/11.2	4.5	4.7/6.0
Air flow(m^3/h)		350	350	350	340
Dehumidifying volume(L/h)		1.19	1.19	1.19	1.19
EER(W/W)		2.4	2.4	2.4	2.3/2.1
Indoor side	Fan type/piece	Centrifugal fan/1			
	Diameter-length	180-85	180-85	180-85	180-85
	Evaporator	Aluminuam-copper			
	Row-fin distance(mm)	3-1.5	3-1.5	3-1.5	3-1.5
	Working area(m^2)	0.074	0.074	0.074	0.074
	Swing motor	SM021	SM021	SM021	SM021
	Input-speed	2.5W-6r/min	2.5W-6r/min	2.5W-6r/min	2.5W-6r/min
	Noise(dB(A))	48	49	48	50
Outdoor side	Compressor type	rotary			
	Compressor model	2P14S236A1G	2P14S236A1G	2P14S236A1G	2P14S236A1G
	Compressor input power(W)	910	910	910	910
	L.R.A.(A)	20	20	20	20
	Protection device	External overload protector			
	Starting method	By capacity			
	Working capacitor(μF)	30 μF/450V		30 μF/450V	
	Working temp.	⩽115℃			
	Condenser	Aluminum-copper			
	Row-fin distance(mm)	2-1.8	2-1.8	3-2.0	3-1.6
	Working area(m^2)	0.12	0.12	0.12	0.12
	Fan type-pipece	Axial flow fan-1			
	Fan diameter(mm)	310	310	310	310
	Throttling method	Capillary			
	Noise(dB(A))	54	55	54	56
Motor fan speed(rpm)		1080	1080	1080	1080
Working capacitor(μF)		3 μF/450V	3 μF/450V	3 μF/450V	3 μF/450V
Output power(W)		45	45	45	45
Dimension(width-height-depth)(mm)		450 × 350 × 580			
Net weight(Kg)		35	35	35	36
Refrigerant charge		R22/490g	R22/490g	R22/490g	R22/600g

The technical date are subject to change without notice .Please refer to the nameplate of the unit.

Table 10-6

Model		GJ12-12LM	GJ12-12L	GJ12-22LM	GJ12-22L
Function		Cooling	Cooling	Cooling	Cooling
Power supply		1Ph 115V~ 60Hz		1Ph 220V~ 60Hz	
Control mode		Mechanical control	Mechanical control	Remote control	Remote control
Capacity(W)		3200	3200	3200	3200
Rated input power(W)		1300	1300	1390	1390
Rated current(A)		11.5	11.5	6.5	6.5
Air flow(m^3/h)		450	450	450	450
Dehumidifying volume(L/h)		1.6	1.6	1.6	1.6
EER(W/W)		2.5	2.5	2.4	2.4
Indoor side	Fan type/piece	Centrifugal fan/1			
	Diameter-length	217-90	217-90	217-90	217-90
	Evaporator	Aluminum-copper			
	Row-fin distance(mm)	3-1.7	3-1.7	3-1.7	3-1.7
	Working area(m^2)	0.11	0.11	0.11	0.11
	Swing motor	SM002U	SM0021U	SM002	SM002
	Input(W)-speed(r/min)	4W-5r/min	4W-5r/min	4W-5r/min	4W-5r/min
	Noise(dB(A))	50	50	50	50
Outdoor side	Compressor type	rotary			
	Compressor model	2P19S126B1F	2P19S126B1F	2P19S236A1G	2P19S236A1G
	Compressor input power(W)	1175	1175	1270	1270
	L.R.A.(A)	45	45	31	31
	Protection device	External overload protector			
	Starting method	capacity			
	Working capacitor(μF)	45 μF/440V		30 μF/450V	
	Working temp.	⩽115℃			
	Condenser	Aluminum-copper			
	Row-fin distance(mm)	3-1.8	3-1.8	3-1.8	3-1.8
	Working area(m^2)	0.16	0.16	0.16	0.16
	Fan type-pipece	Axial flow fan-1			
	Fan diameter(mm)	346	346	346	346
	Throttling method	Capillary			
	Noise(dB(A))	57	57	57	57
Motor fan speed(rpm)		910	910	910	910
Working capacitor(μF)		14 μF/250V	14 μF/250V	4.5 μF/450V	4.5 μF/450V
Output power(W)		60	60	60	60
Dimension(width-height-depth)(mm)		380 × 570 × 590			
Net weight(Kg)		45			
Refrigerant charge(kg)		R22/ 0.85		R22/0.82	

The technical date are subject to change without notice .Please refer to the nameplate of the unit.

10.3 Performance curve

1. For KC-18 & GJ7 model.

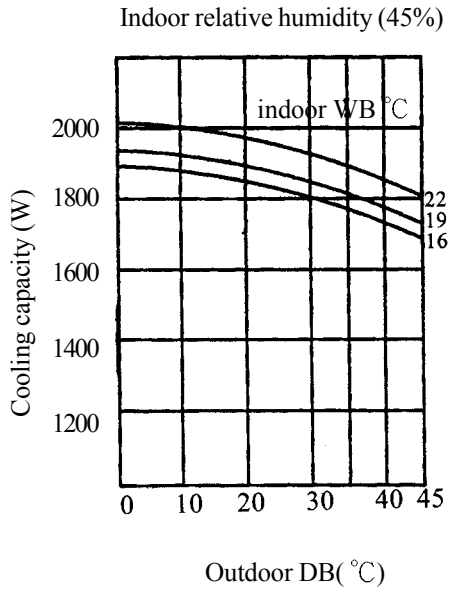

Cooling characteristic

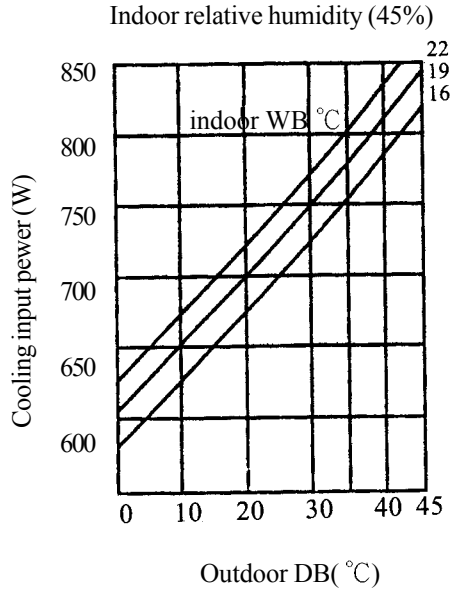

Power consumption

2. For KC-20 model.

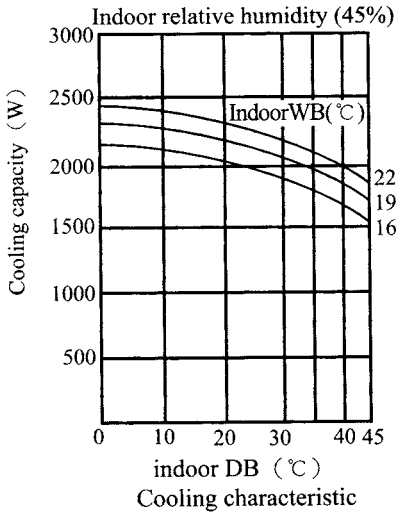

Cooling characteristic

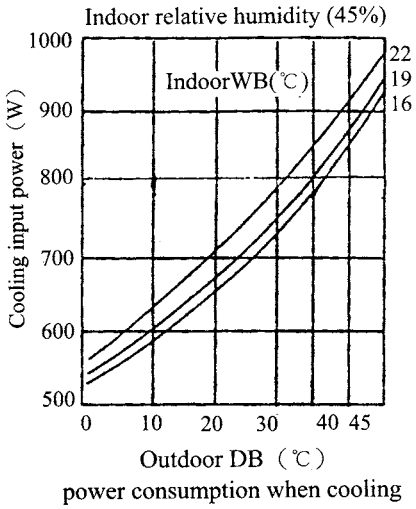

power consumption when cooling

figure 10-3

3. For KC-25 & GJ10 model.

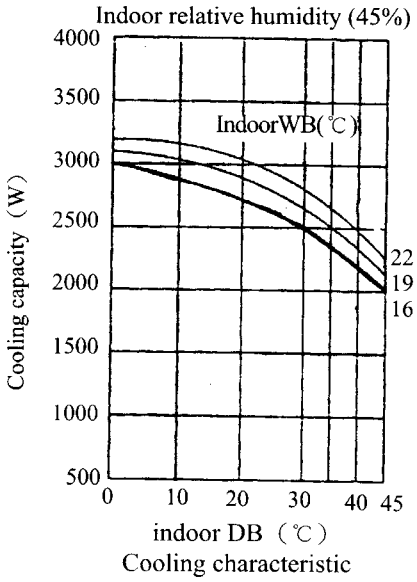

Cooling characteristic

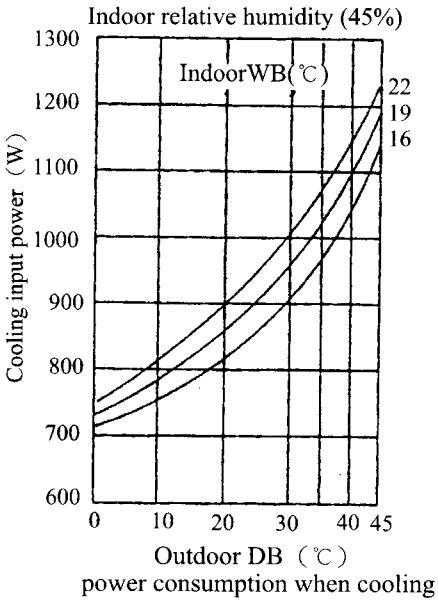

power consumption when cooling

4. For KC-32 & GJ12 model.

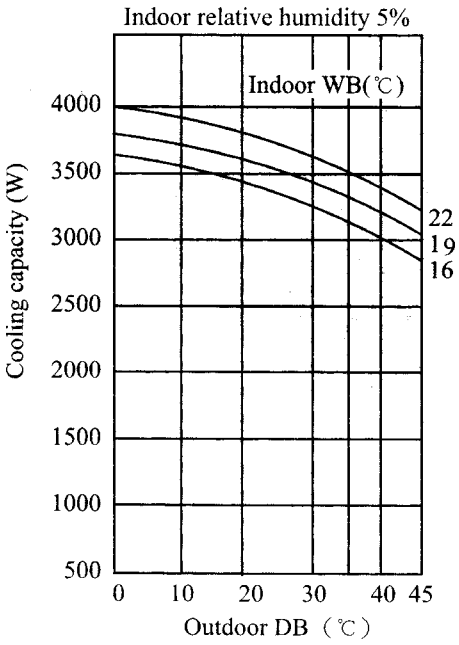

Cooling characteristic

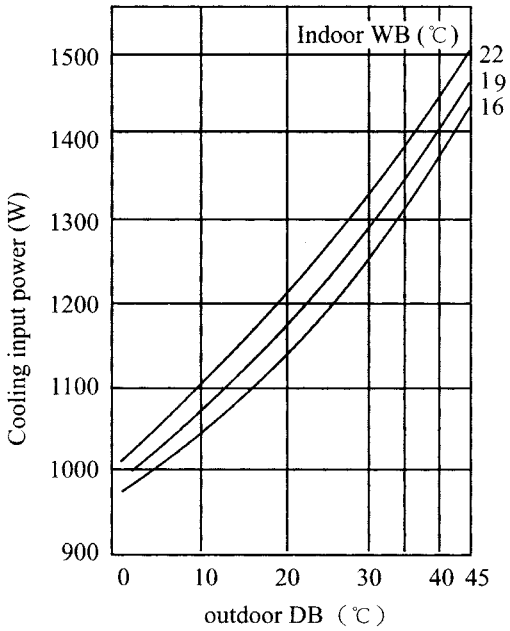

Power consumption when cooling

figure 10-5

5. For KC-46/C1

Indoor relative humidity

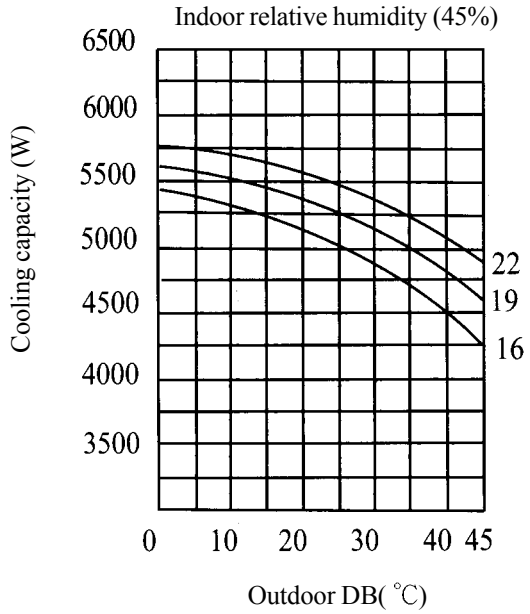

Cooling characteristic

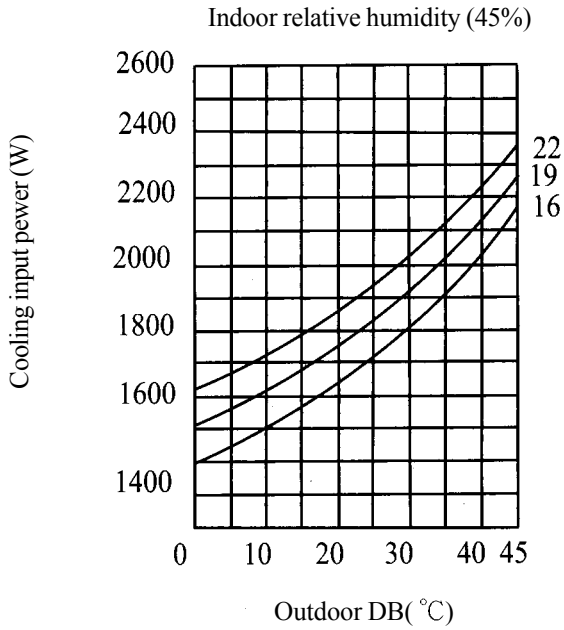

Power consumption

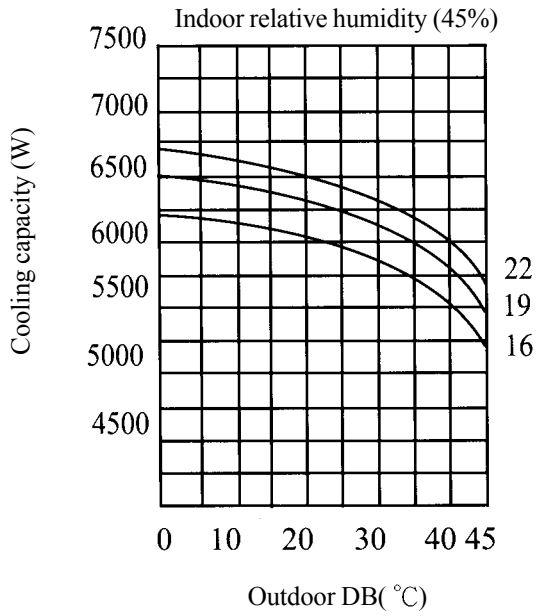

Cooling characteristic

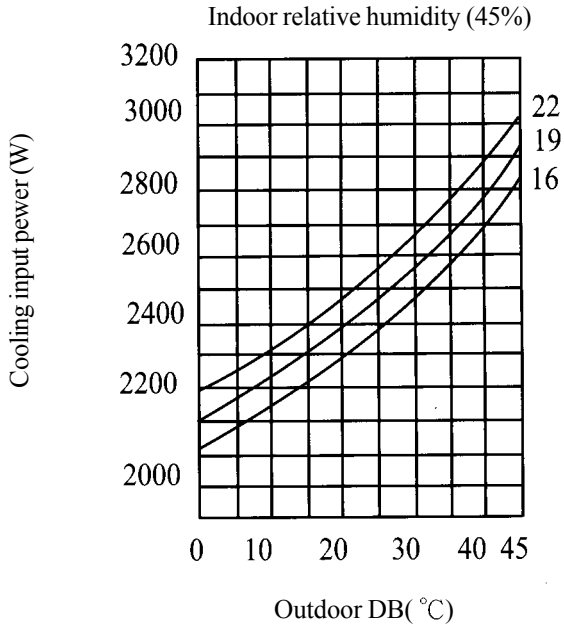

Power consumption

figure 10-6

10.4 Outlines and dimensions

1. For KC-18 & GJ7 model.

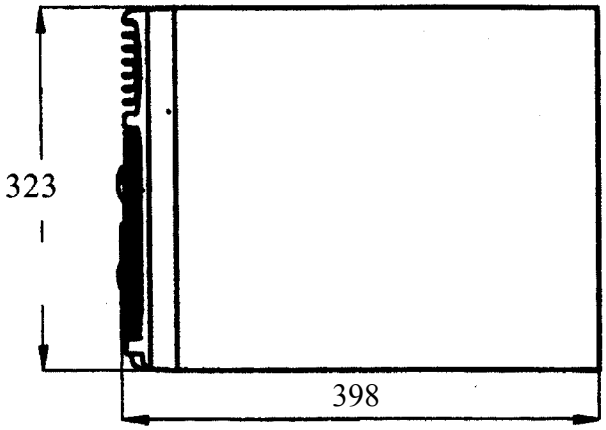

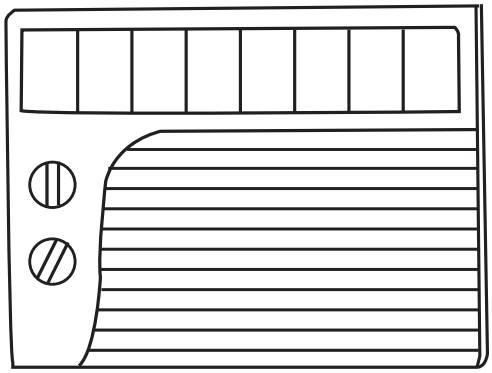

(a)

unit:mm

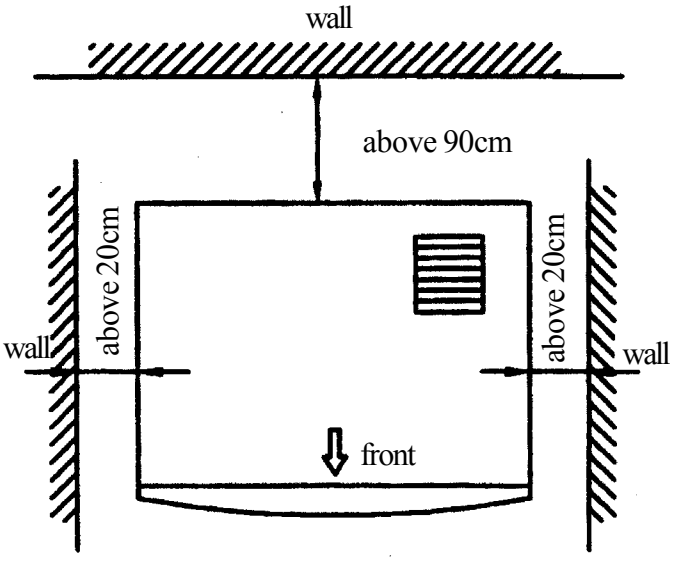

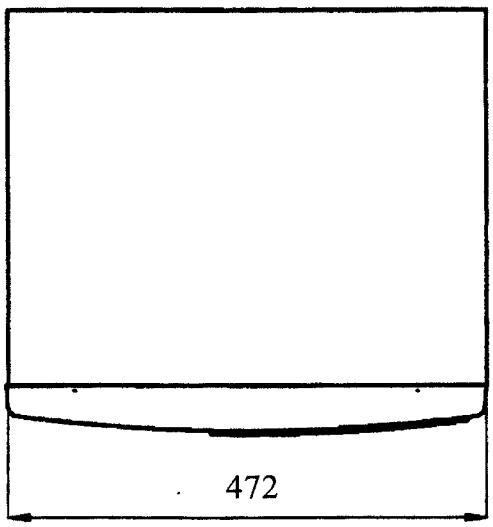

(c)

figure 10-7

2. For KC-20/C1 KC-25 & GJ10 model.

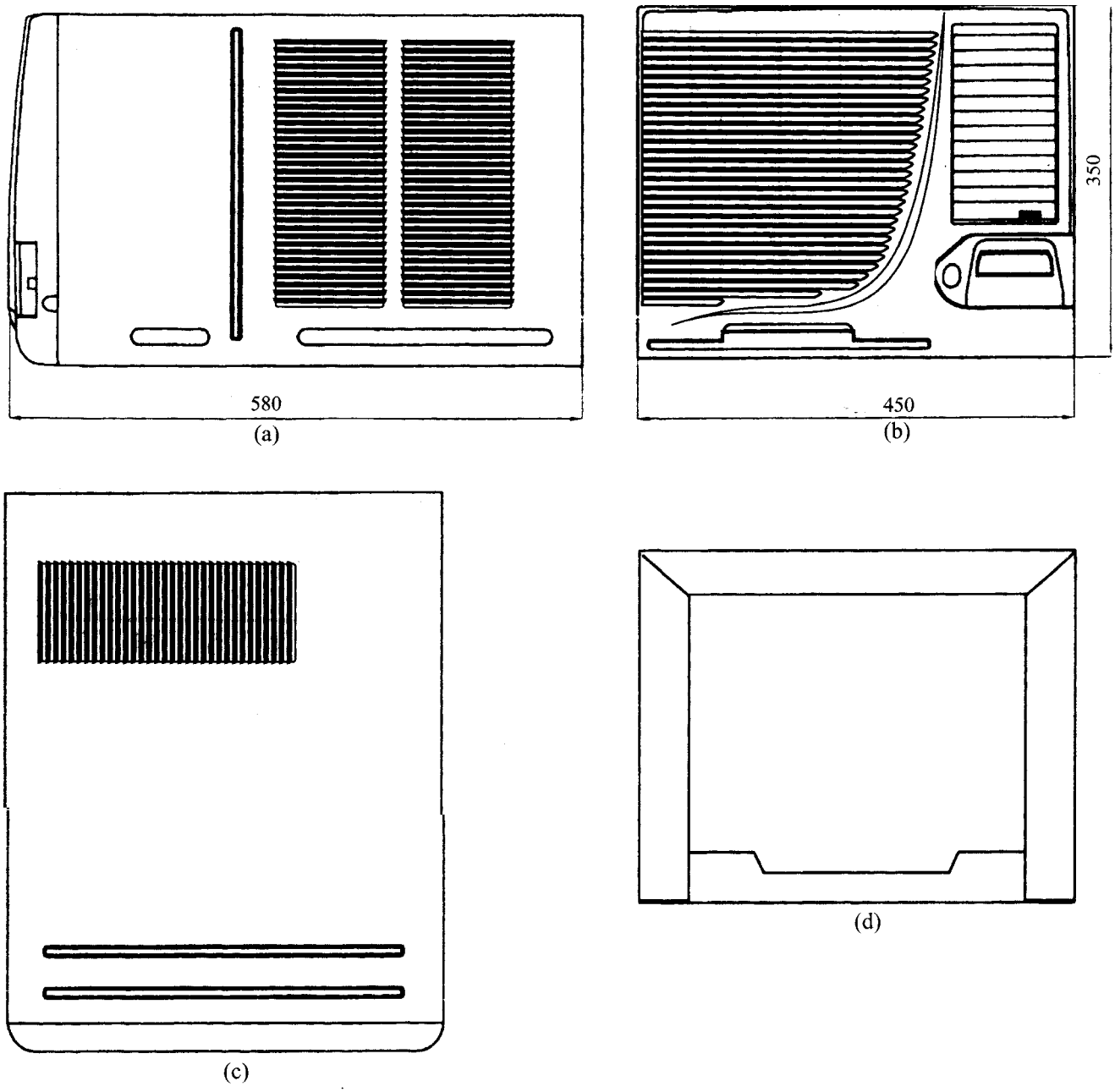

figure 10-8

3. For KC-32 & GJ12 model.

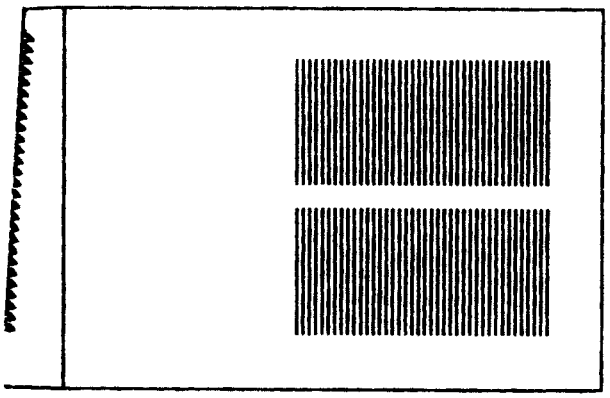

(a)

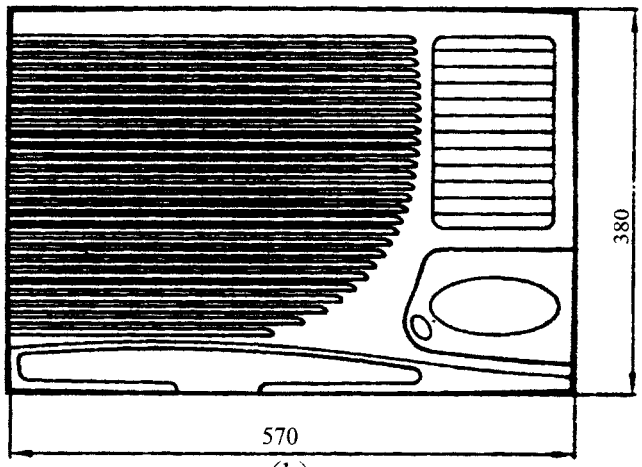

(b)

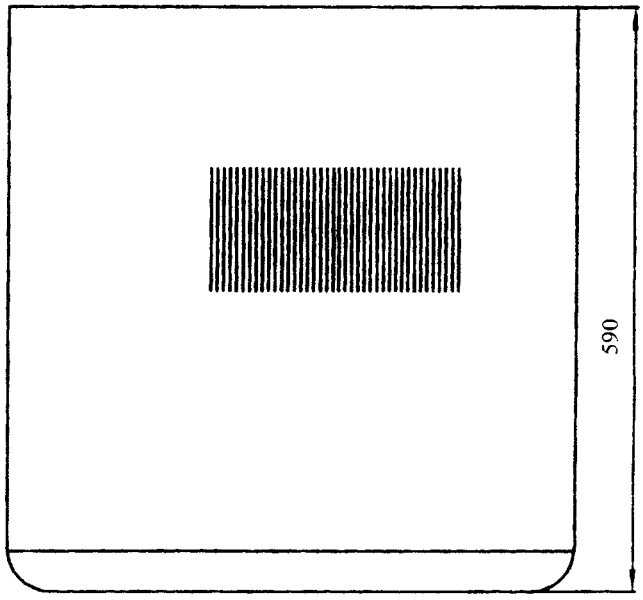

(c)

figure 10-9

4. For KC-46 & KC-60 model.

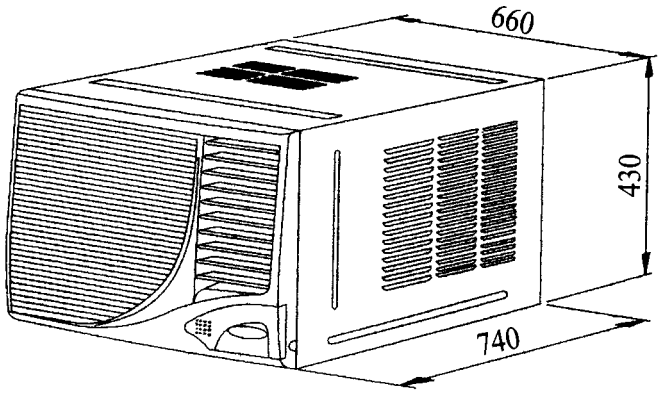

(a)

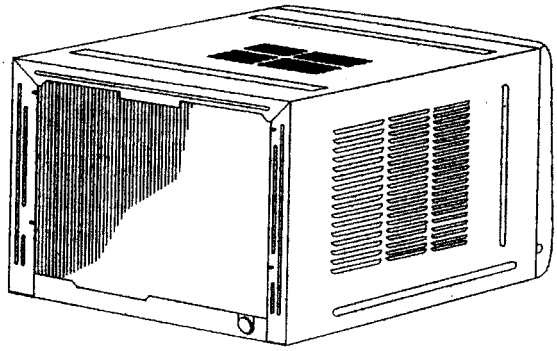

(b)

figure 10-10

10.5 Explosive view and spare partslist of KC-18 & GJ7 model

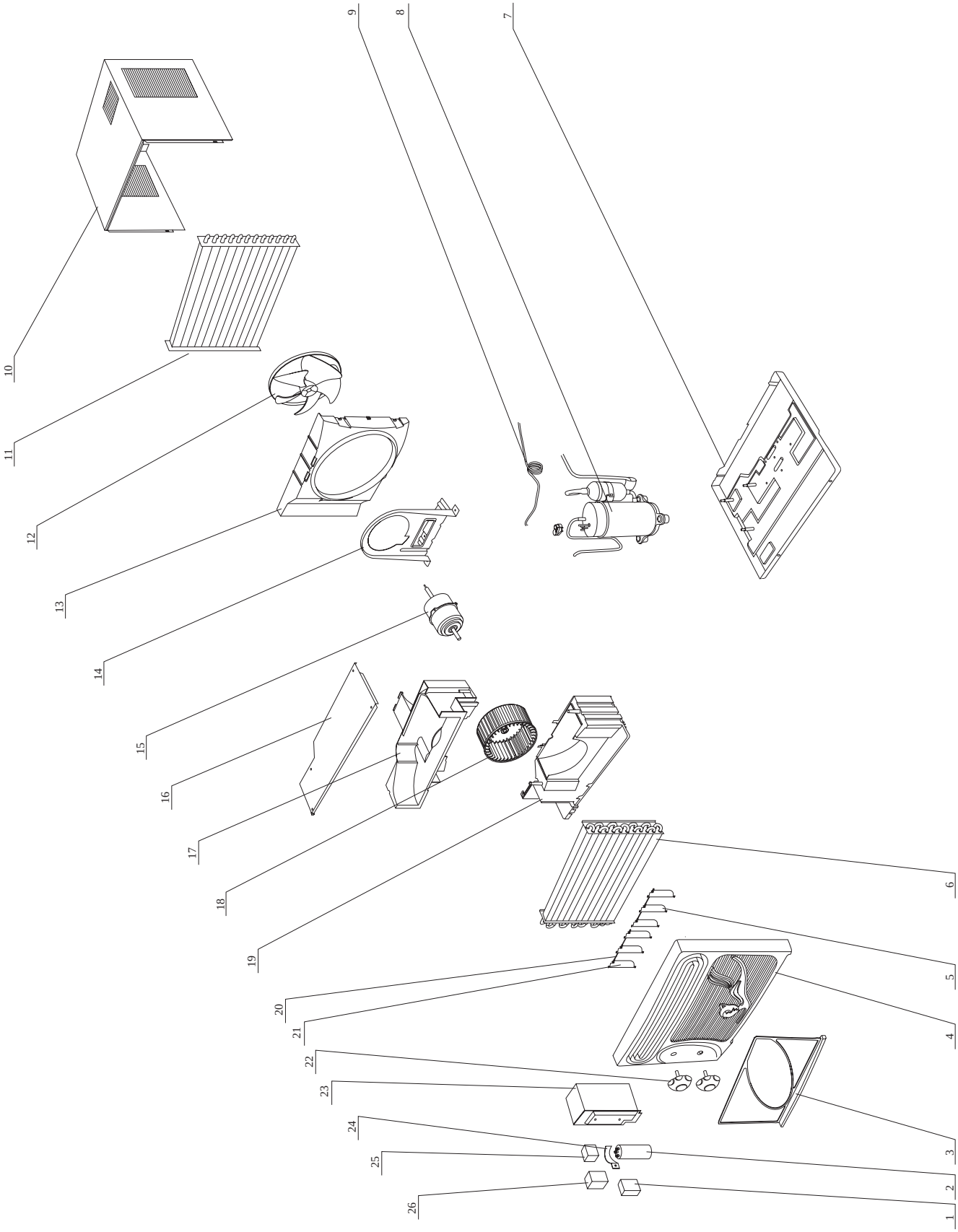

figure 10-11

Table 10-7

No.	Description		Part No.			Qty
			KC-18/C1	GJ7-22L	GJ7-12L	
1	Thermostat	温控器	45040005	45040005	45040005	1
2	Fan-Compressor capacitor	风机 - 压缩机电容	33000006	33000007	33000019	1
3	Air filter	过滤网	11121001	11121001	11121001	1
4	Front panel	面板部件	20001108	20001108	20001108	1
5	Air guider 1	扫风叶片 1	10511005	10511005	10511005	6
6	Evaporator	蒸发器部件	01031001	01031001	01031001	1
7	Chassis	底盘部件	01201009	01201009	01201009	1
8	Compressor C-1R67H4P	压缩机及其配件 C-1R67H4P	00100315	\	\	1
8	Compressor C-1R51H6L	压缩机及其配件 C-1R51H6L	\	00100309	\	1
8	Compressor C-1R51H2L	压缩机及其配件 C-1R51H2L	\	\	00100303	1
9	Capillary assy	毛细管部件	03001005	03001005	03001005	1
10	Cabinet	外罩部件	01431003	01431003	01431003	1
11	Condenser	冷凝器部件	01101002	01101002	01101002	1
12	Axial flow fan	轴流风叶	10331001	10331001	10331001	1
13	Rear insulation plate	后隔板	20051001	20051001	20051001	1
14	Motor support	电机支架	01701001	01701001	01701001	1
15	motor	电 机	15011002	15011003	15011001	1
16	Air outlet cover	出风口上盖组件	01251010	01251010	01251010	1
17	Cover of propeller housing	蜗壳上盖	22241002	22241002	22241002	1
18	Centrifugal fan	离心风叶	10311001	10311001	10311001	1
19	Base of propeller housing	蜗壳底座	26151006	26151006	26151006	1
20	Lever of air guider	扫风叶片连杆	10581001	10581001	10581001	2
21	Air guider II	扫风叶片 II	10511007	10511007	10511007	2
22	Knob	旋 钮	45031343	45031343	45031343	2
23	Electric box	电 器 盒	01411011	01411011	01411011	1
24	Capacitor clamp	电 容 夹	02141001	02141001	02141001	1
25	Terminal board	接线板 2-5	42011106	42011106	42011106	1
26	Main switch	主令开关	45010309	45010304	45010304	1
	Cord clamp	电线夹	71010103	71010103	71010103	1
	Power cord	电源线	40020344	40020268	40020302	1

The data are subject to change without notice.

10.6 Explosive view and spare pars list of KC-25 & GJ10 model

1.Mechanical control

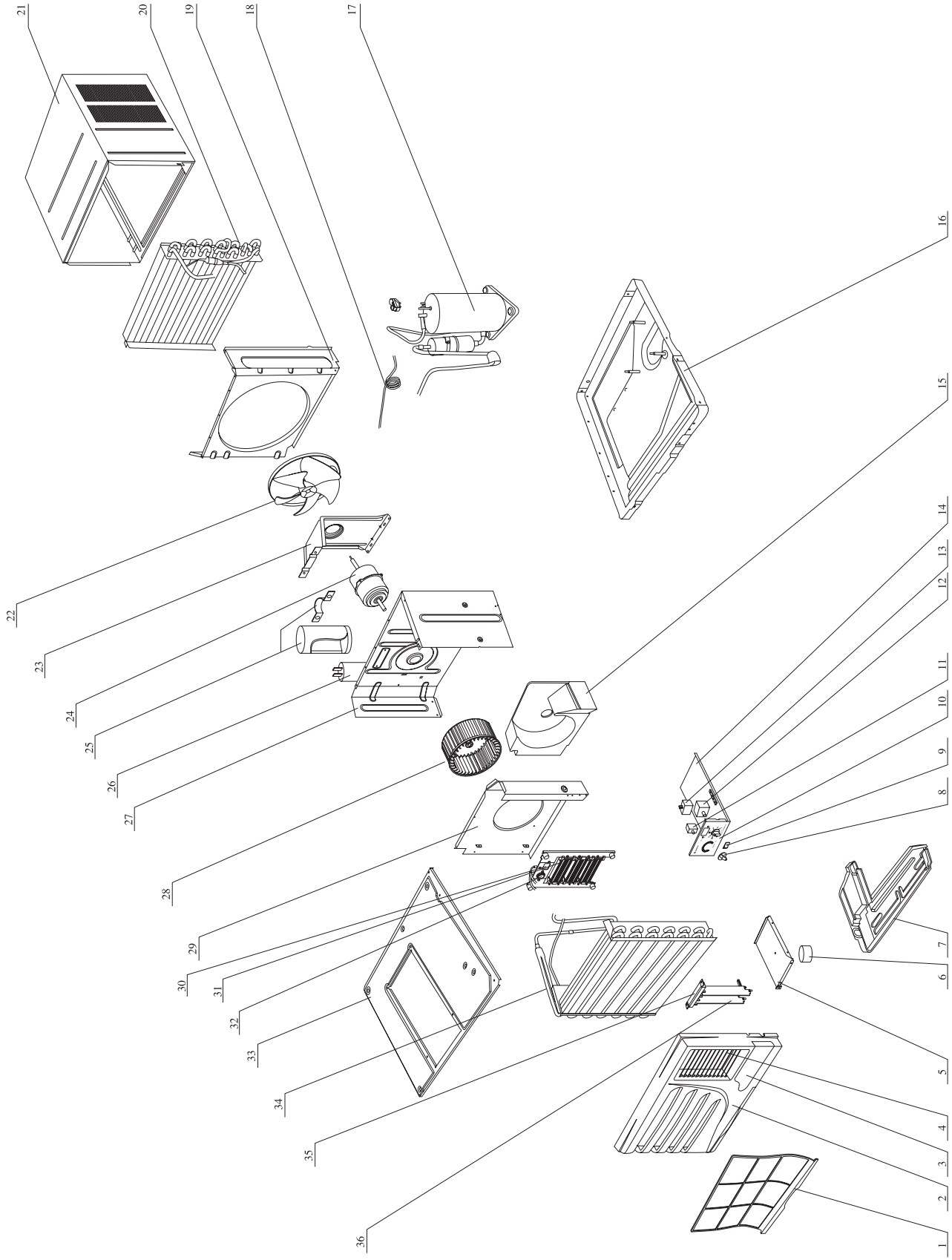

figure 10-12

Table 10-8

No.	Description		Part No.						Qty
			KC-20/C1	KC-25/C1	KCD-25/C1	GJ10-12RM	GJ10-12LM	GJ10-22LM	
1	Fliter net A	过滤网 A	11121127	11121127	11121127	11121127	11121125	11121127	1
2	Front panel	面板部件	20001109	20001109	20001109	20001118	20001116	20001116	1
3	Cover of switch	盖板 A	20161128	20161128	20161123	20161128	20161128	20161130	1
4	Horizontal air guider	导风叶片	10511125	10511125	10511125	10511125	10511125	10511125	12
5	base plate	风道底板	01221155	01221155	01221155	01221155	01221155	01221155	1
6	Swing motor	同步电机	15210217	15210217	15210217	15210217	15211002	15210217	1
7	Drain pan	接水盘	12411003	12411003	12412002	12411003	12411003	12411003	1
8	Knob	旋钮	45031123	45031123	45031123	45031123	45031123	45031123	2
9	Swing switch	拨动开关	45020104	45020104	45020104	45020103	45020103	45020103	1
10	Mask	控制面板	20161209	20161209	20161223	20161222	20161201	20161201	1
11	Thermostat	温控器	45040005	45040005	45040006	45040006	45040005	45040005	1
12	Main switch	主令开关	45010308	45010308	45010306	45010306	45010305	45010305	1
13	fan capacitor	风机电容	33010027	33010028	33010028	33010021	33010715	33010021	1
14	Electric box	电器盒	01411125	01411125	01411125	01411125	01411125	01411125	1
15	Propeller housing	蜗壳	12101121	12101121	12101221	12101121	12101121	12101121	1
16	Chassis assembly	底盘部件	01201138	01201138	01201138	01201138	01201138	01201138	1
17	Compressor	压缩机及其配件	00100251	\	\	\	\	\	1
17	Compressor	压缩机及其配件	\	00100255	00100255	00100252	00100250	00100252	1
18	Capillary assembly	毛细管部件	03001521	03011011	03011011	03001009	03001521	03001009	1
19	Rear insulation plate	后隔板	01231125	01231125	01201124	01231125	01231125	01231125	1
20	Condensor	冷凝器组件	01131111	01101111	01101111	01101131	01101131	01101131	1
21	Cabinet	外罩部件	01431005	01431005	01431005	01431005	01431005	01431005	1
22	Axial flow fan	轴流风叶	10331125	10331125	10331123	10331125	10331125	10331125	1
23	Motor support	电机支架	01701123	01701123	01701123	01701123	01701123	01701123	1
24	Motor	电机	15011005	15011005	15011005	15011004	15011006	15011004	1
25	Capacitor box clamp	电容盒组件	76711050	76711050	76711050	76711050	76711050	76711050	1
26	Compressor capacitor	压缩机电容	33000021	33000021	33000021	33000018	33010727	33000018	1
27	front insulation plate	前隔板部件	01231388	01231388	01231388	01231388	01231388	01231388	1
28	Centrifugual fan	离心风叶组件	10311125	10311125	10311125	10311125	10311125	10311125	1
29	insulation plate of housing	蜗壳前隔板组件	01231390	01231390	01231386	01231390	01231390	01231390	1
30	Fuse	热熔断器	\	\	46010363	46010363	\	\	1
31	PTC heater	PTC 电加热器	\	\	32010011	32010011	\	\	1
32	Temp limiter	限温器	\	\	46010509	46010509	\	\	1
33	Top connection plate	上盖连接板部件	01381350	01381350	01381350	01381350	01381350	01381350	1
34	Evaporator	蒸发器部件	01031101	01001003	01001004	01001251	01031151	01031151	1
35	Cross beam assembly	横梁部件	24241200	24241200	24241200	24241200	24241200	24241200	1
36	Air guider	扫风叶片	10511123	10511123	10511123	10511123	10511123	10511123	1
	Power cord	电源线	40020461	40020461	40020463	40020269	40020268	40020268	1

The data are subject to change without notice.

2.Remote control

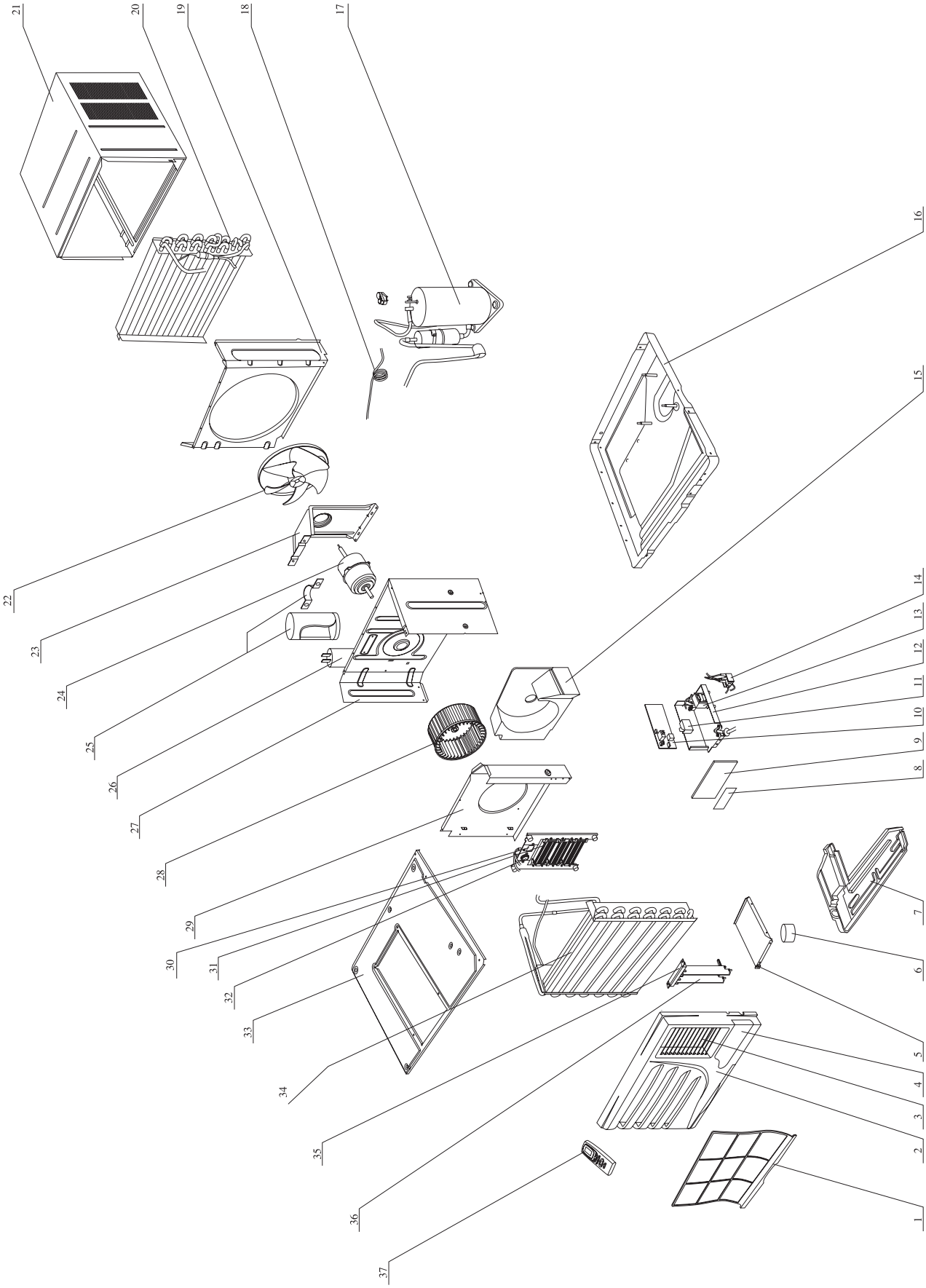

figure 10-13

Table 10-9

No.	Description		Part No.					Qty
			KC-25/C1A	KCD-25/C1A	GJ10-12L	GJ10-22L	GJ10-22R	
1	Fliter net A	过滤网 A	11121127	11121127	11121125	11121127	11121127	1
2	Front panel	面板部件	20001103	20001103	20001103	20001103	20001103	1
3	Horizontal air guider	导风叶片	10511125	10511125	10511125	10511125	10511125	12
4	Cover of switch	盖板 A	20161123	20161123	20161122	20161122	20161123	1
5	base plate	风道底板	01221155	01221155	01221155	01221155	01221155	1
6	Swing motor	同步电机	15210217	15210217	15211002	15210217	15210217	1
7	Drain pan	接水盘	12411003	12411003	12411003	12411003	12411003	1
8	PVC film	面盖薄片	22431201	22431201	22431138	22431138	22431138	1
9	Receiver cover	电器面盖	20101129	20101129	20101129	20101129	20101129	1
10	PCB	控制器	30022205	30022206	30111211	30111210	30111214	1
11	fan capacitor	风机电容	33010028	33010028	33010715	33010021	33010021	1
12	Electric box	电器盒	20101126	20101126	20101126	20101126	20101126	1
13	Transformer	变压器	43110170	43110170	43110163	43110170	43110170	1
14	Terminal board 2-5	接线板 2-5	42011106	42011106	42011106	42011106	42011106	1
15	Propeller housing	蜗壳	12101121	12101221	12101121	12101121	12101121	1
16	Chassis assembly	底盘部件	01201138	01201138	01201138	01201138	01201138	1
17	Compressor	压缩机及其配件	00100255	00100255	00100250	00100252	00100252	1
18	Capillary assembly	毛细管部件	03011011	03011011	03001521	03001009	03001008	1
19	Rear insulation plate	后隔板	01231125	01231125	01231125	01231125	01231125	1
20	Condencer	冷凝器组件	01131111	01101111	01101131	01101131	01101181	1
21	Cabinet	外罩部件	01431005	01431005	01431005	01431005	01431005	1
22	Axial flow fan	轴流风叶	10331125	10331125	10331125	10331125	10331125	1
23	Motor support	电机支架	01701123	01701123	01701123	01701123	01701123	1
24	Motor	电机	15011005	15011005	15011006	15011004	15011004	1
25	Capacitor box clamp	电容盒组件	76711050	76711050	76711050	76711050	76711050	1
26	Compressor capacitor	压缩机电容	33000021	33000021	33010727	33000018	33000018	1
27	front insulation plate	前隔板部件	01231388	01231388	01231388	01231388	01231388	1
28	Centrifugual fan	离心风叶组件	10311125	10311125	10311125	10311125	10311125	1
29	insulation plate of housing	蜗壳前隔板组件	01231390	01231386	01231390	01231390	01231390	1
30	Fuse	热熔断器	\	46010363	\	\	46010363	1
31	PTC heater	PTC 电加热器	\	32010011	\	\	32010011	1
32	Temp limiter	限温器	\	46010509	\	\	46010509	1
33	Top connection plate	上盖连接板部件	01381350	01381350	01381350	01381350	01381350	1
34	Evaporator	蒸发器部件	01001003	01001004	01031151	01031151	01031151	1
35	Cross beam assembly	横梁部件	24241200	24241200	24241200	24241200	24241200	1
36	Air guider	扫风叶片	10511123	10511123	10511123	10511123	10511123	1
37	Remote control	遥控器	30515002	30515002	30511108	30511108	Y112	1
	Power cord	电源线	40020462	40020464	40020252	40020269	40020269	1

The data are subject to change without notice.

10.7 Explosive view and spare pars list of KC-32 & GJ12 model

1. Mechanical control

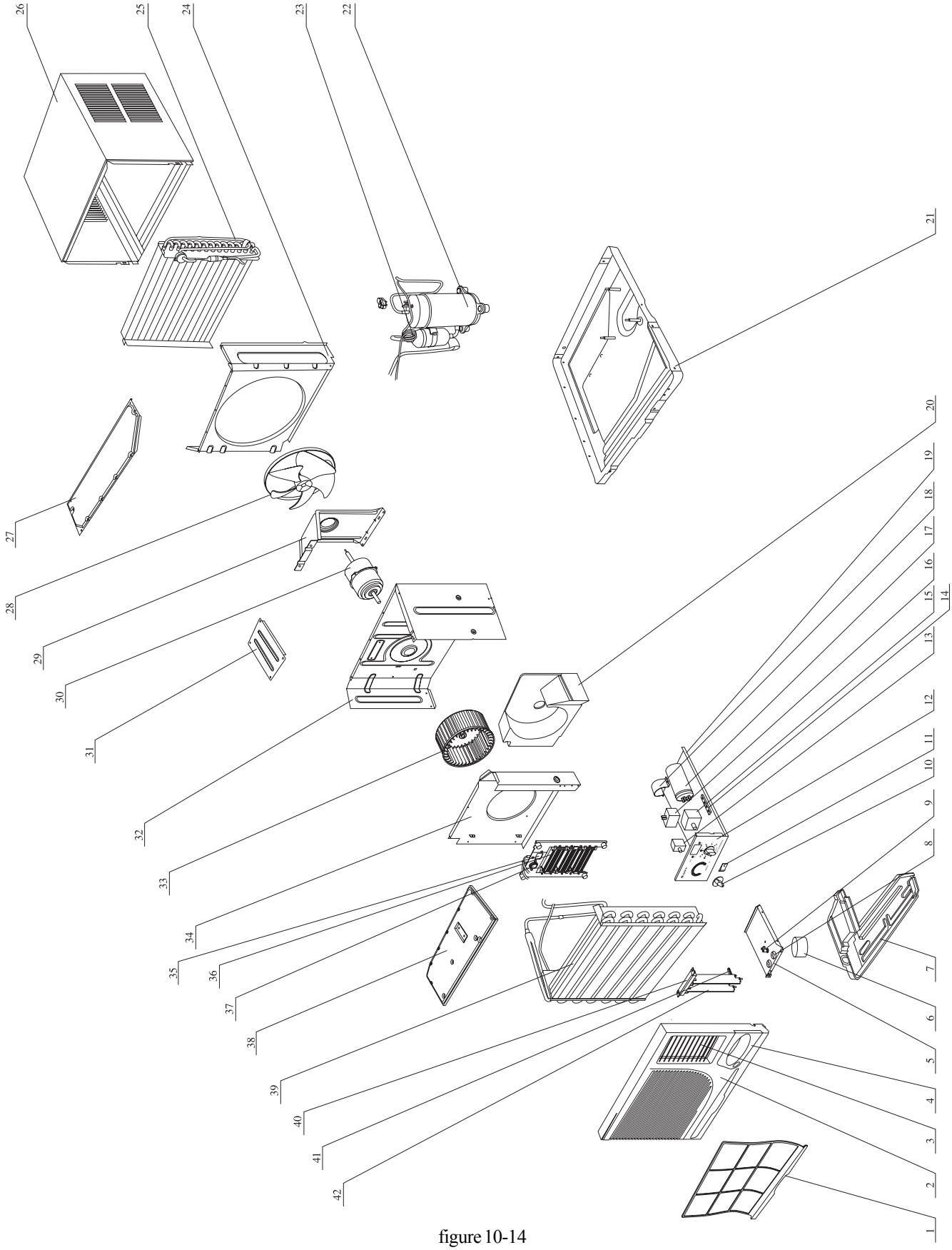

figure 10-14

Table 10-10

No.	Description		Part No.				Qty
			KC32/C1	KCD32/C1	GJ12-22LM	GJ12-12LM	
1	Fliter net	过滤网	11121324	11121326	11121324	11121324	1
2	Front panel	面板部件	20001105	20001104	20001120	20001120	1
3	Horizontal air guider	导风叶片	10511324	10511324	10511324	10511324	1
4	Cover of switch	盖板	20161324	20161326	20161327	20161325	1
5	base plate	风道底板	01221325	01221326	01221326	01221326	1
6	Swing motor	同步电机	15210202	15210202	15210202	15211001	1
7	Drain pan	接水盘	12411004	12411004	12411004	12411004	1
8	Plug	插座	26151135	26151135	26151135	26151135	2
9	Slide block	滑块	10541135	10541135	10541135	10541135	1
10	Knob	旋钮	45030002	45030002	45030002	45030002	2
11	Swing switch	拨动开关	45020104	45020104	45020102	45020103	1
12	Mask	控制面板	20161314	20161307	20161314	20161321	1
13	Thermostat	温控器	45040003	45040004	45040003	45040003	1
14	Insulating gasket D	绝缘垫片 D	70410525	70411055	70410525	70410525	1
15	Main switch	主令开关	45010308	45010306	45010305	45010305	1
16	fan capacitor	风机电容	33010028	33010028	33010012	33010016	1
17	Compressor capacitor	压缩机电容	33000021	33000021	33000018	33010714	1
18	Capacitor clamp	电容夹	02143401	02143401	02143401	02143401	1
19	Electric box	电器盒	01221170	01221170	01221170	01221170	1
20	Propeller housing	蜗壳	12101022	12101321	12101321	12101321	1
21	Chassis assembly	底盘部件	01211331	01211331	01211331	01211331	1
22	Compressor	压缩机及其配件	00100340	00100340	00100259	00100258	1
23	Capillary assembly	毛细管部件	03001001	03001002	03001010	03001010	1
24	Rear insulation plate	后隔板	01231151	01231151	01231151	01231151	1
25	Condencer	冷凝器组件	03221033	03221033	01101341	01101341	1
26	Cabinet	外罩部件	01431149	01431149	01431149	01431149	1
27	Top cover of condensor	冷凝器上盖板部件	01171344	01171344	01171139	01171139	1
28	Axial flow fan	轴流风叶	10101347	10101347	10331136	10331136	1
29	Motor support	电机支架	01701135	01701135	01701135	01701135	1
30	Motor	电机	15011019	15011019	15011009	15011010	1
31	Top connection plate	上盖连接板	01381322	01381321	01381322	01381322	1
32	front insulation plate	前隔板部件	01231331	01231331	01231331	01231331	1
33	Centrifugual fan	离心风叶组件	10101342	10101342	10101343	10101343	1
34	insulation plate of housing	蜗壳前隔板组件	01231328	01231305	01231328	01231328	1
35	Fuse	热熔断器	\	46010363	\	\	1
36	PTC heater	PTC 电加热器	\	32010010	\	\	1
37	Temp.limiter	限温器	\	46010509	\	\	1
38	Top cover of evaporator	蒸发器上盖板部件	01071300	01071300	01071331	01071331	1
39	Evaporator	蒸发器部件	01001005	01001006	01031341	01031341	1
40	Cross beam	横梁	24241145	24241145	24241145	24241145	1
41	connecting lever	风叶连杆	10581135	10581135	10581135	10581135	1
42	Air guider	扫风叶片	10511135	10511135	10511135	10511135	2
	Power cord	电源线	40020463	40020463	40020268	40020295	1

The data are subject to change without notice.

2. Romote control

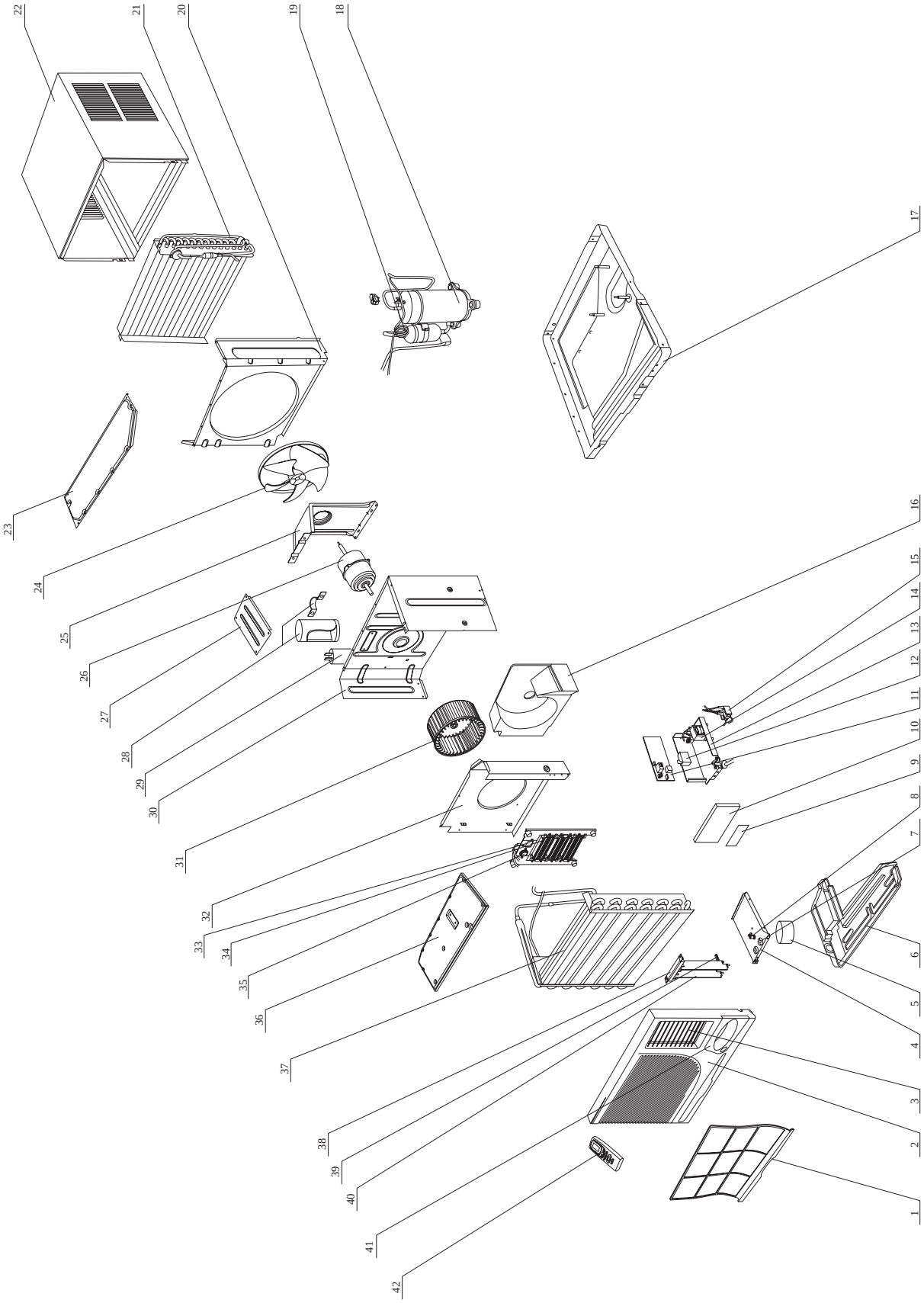

figure 10-15

Table 10-11

No.	Description	名称及规格	Part No.				Qty	
			KC-32/C1A	KCD-32/ C1A	GJ12-22L	GJ12-22L		
1	Fliter net	过滤网	11121324	11121326	11121324	11121324	1	
2	Front panel	面板部件	20001104	20001104	20001120	20001104	1	
3	Horizontal air guider	导风叶片	10511324	10511324	10511324	10511324	1	
4	base plate	风道底板	01221325	01221326	01221326	01221326	1	
5	Swing motor	同步电机	15210202	15210202	15210202	15211001	1	
6	Drain pan	接水盘	12411004	12411004	12411004	12411004	1	
7	Plug	插座	26151135	26151135	26151135	26151135	2	
8	Slide block	滑块	10541135	10541135	10541135	10541135	1	
9	PVC film	面盖薄片	22431201	22431128	22431201	22431201	1	
10	Cover of receiver	电器面盖	20101324	20101324	20101324	20101324	1	
11	PCB	控制器	30022205	30022206	30022205	30111211	1	
12	fan capacitor	风机电容	33010028	33010028	33010012	33010016	1	
13	Electric box	电器盒	20101323	20101323	20101323	20101323	1	
14	Transformer	变压器	43110170	43110160	43110170	43110163	1	
15	Terminal board 2-5	接线板 2-5	42011106	42011106	42011106	42011106	1	
16	Propeller housing	蜗壳	12101022	12101022	12101321	12101321	1	
17	Chassis assembly	底盘部件	01211331	01211331	01211331	01211331	1	
18	Compressor	压缩机及其配件	00100340	00100340	00100259	00100258	1	
19	Capillary assembly	毛细管部件	03001001	03001002	03001010	03001010	1	
20	Rear insulation plate	后隔板	01231151	01231151	01231151	01231151	1	
21	Condencer	冷凝器组件	03221033	03221033	01101341	01101341	1	
22	Cabinet	外罩部件	01431149	01431149	01431149	01431150	1	
23	Top cover of condensor	冷凝器上盖板部件	01171344	01171344	01171139	01171139	1	
24	Axial flow fan	轴流风叶	10101347	10101347	10331136	10331136	1	
25	Motor support	电机支架	01701135	01701135	01701135	01701135	1	
26	Motor	电机	15011019	15011019	15011009	15011010	1	
27	Top connection plate	上盖连接板	01381322	01381321	01381322	01381322	1	
28	Capacitor box assy	电容盒组件	76711050	76711050	76711050	76711050	1	
29	Compressor capacitor	压缩机电容	33000021	33000021	33000018	33010714	1	
30	front insulation plate	前隔板部件	01231331	01231331	01231331	01231331	1	
31	Centrifugual fan	离心风叶组件	10101342	10101342	10101343	10101343	1	
32	insulation plate of housing	蜗壳前隔板组件	01231328	01231305	01231328	01231328	1	
33	Fuse	热熔断器	\	46010363	\	\	1	
34	PTC heater	PTC 电加热器	\	32010010	\	\	1	
35	Temp.limiter	限温器	\	46010509	\	\	1	
36	Top cover of evaporator	蒸发器上盖板部件	01071300	01071300	01071331	01071300	1	
37	Evaporator	蒸发器部件	01001005	01001006	01031341	01031341	1	
38	Cross beam	横梁	24241145	24241145	24241145	24241145	1	
39	connecting lever	风叶连杆	10581135	10581135	10581135	10581135	1	
40	Air guider	扫风叶片	10511135	10511135	10511135	10511135	2	
41	Cover of switch	盖板	20161325	20161325	20161325	20161326	1	
42	Remote control	遥控器	30515002	30515002	30515002	30515002	1	
	Power cord	电源线	40020464	40020464	40020269	40020253	1	

The data are subject to change without notice.

10.8 Explosive view and spare parts list of KC-46 & KC-60 model

1. Remote control

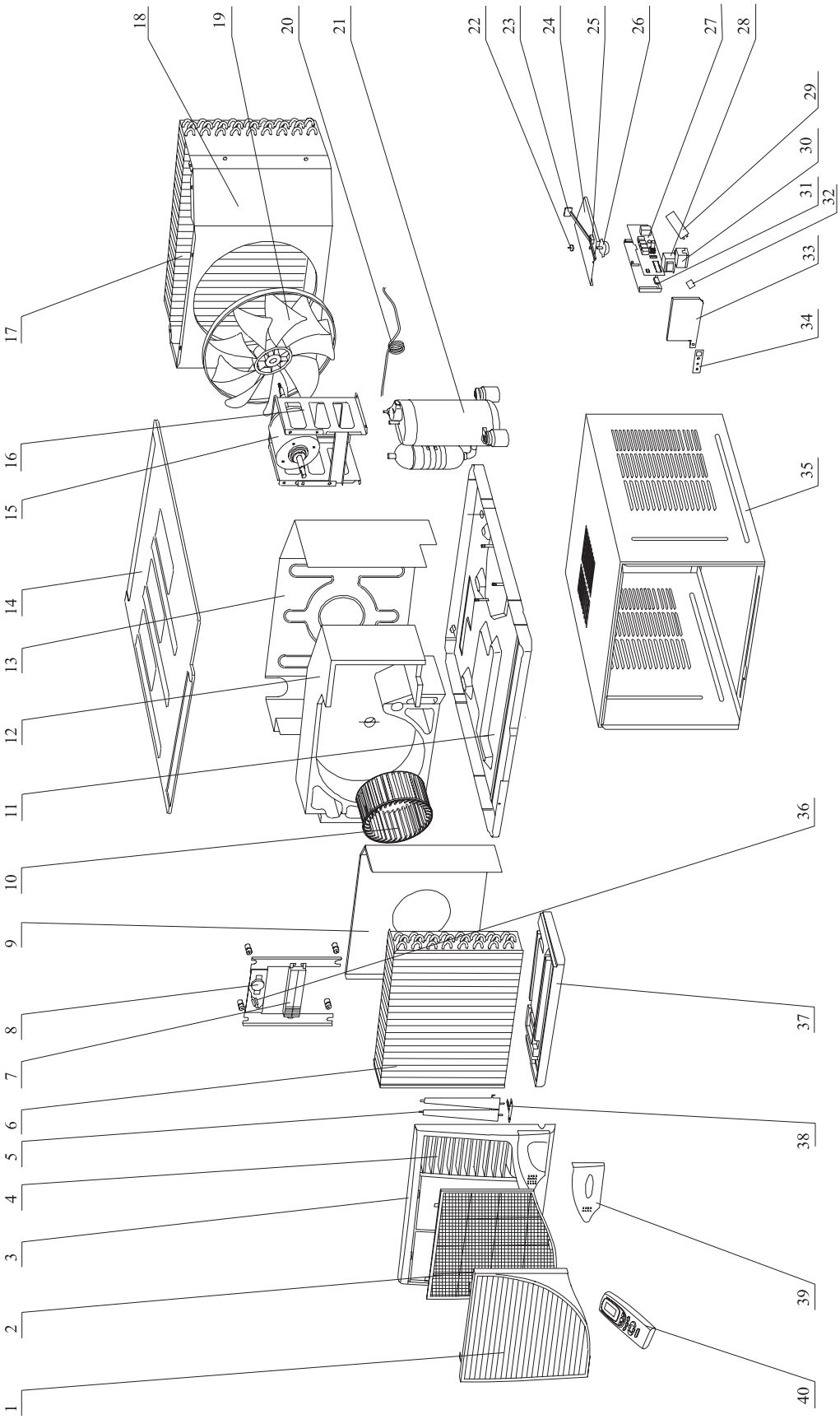

figure 10-16

Table 10-12

No.	Description		Part No.		Qty
			KC-46/C1A	KCR-46/C1A	
1	Front panel	面板	20001521	20001521	1
2	Filter	过滤网	11121520	11121520	1
3	Case of front panel	面板体	20001520	20001520	1
4	Horizontal air guider	导风叶片	11511521	11511521	1
5	swing air guider	扫风叶片	11511520	11511520	1
6	Evaporator	蒸发器组件	01001402	01001402	1
7	PTC heater	PTC 加热器	\	33010010	1
8	Temp. limiter	限温器	\	46010509	1
9	Insulation plate of housing	蜗壳前隔板部件	01231527	01231527	1
10	Centrifugal fan	离心风叶部件	10311360	10311360	1
11	Chassis assy	底盘部件	01201521	01201521	1
12	Propeller housing	蜗壳	12101520	12101520	1
13	Front insulation plate	前隔板部件	01231528	01231528	1
14	Cover plate	上盖板部件	01251520	01251520	1
15	Motor	电机	15011020	15011020	1
16	Motor supporter	电机支架	01701520	01701520	1
17	Condenser	冷凝器组件	01101402	01101402	2
18	Rear insulation plate	后隔板部件	01231529	01231529	1
19	Axial fan	轴流风叶部件	10331522	10331522	1
20	Capillary assy	毛细管部件	03001401	03001401	1
21	Compressor	压缩机及其配件	00100141	00100141	1
22	Crank	偏心转轴	11561520	11561520	1
23	Fresh air door	风门连杆	11581520	11581520	1
24	Cover of electric box	电器盒盖板	01411012	01411012	1
25	Support of air door	风门座	26151520	26151520	1
26	Swing motor	同步电机	15210203	15210203	1
27	PCB	控制器	30022205	30022205	1
28	Transformer	变压器	43110170	43110170	1
29	Compressor capacitor	压缩机电容	33010710	33010710	2
30	Fan capacitor	风机电容	33010009	33010009	1
31	Support plate of PCB	控制器底板	20121310	20121310	1
32	Relay	继电器	44020334	44020334	1
33	Front plate of electric box	电器盒面板	20101310	20101310	1
34	PVC film	面盖薄片	22431128	22431128	1
35	Cabinet	外罩部件	01431006	01431006	1
36	Fuse	熔断体	\	46010363	1
37	Drain pan	接水盘	12411520	12411520	2
38	Lever of air guider	扫风连接杆	11581521	11581521	1
39	Cover of switch	盖板	20161311	20161311	1
40	Remote control	遥控器	30515002	30515002	1
	Power cord	电源线	40020464	40020464	1
	4-way valve	四通阀	\	43000313	1

The data are subject to change without notice.

2. Remote control

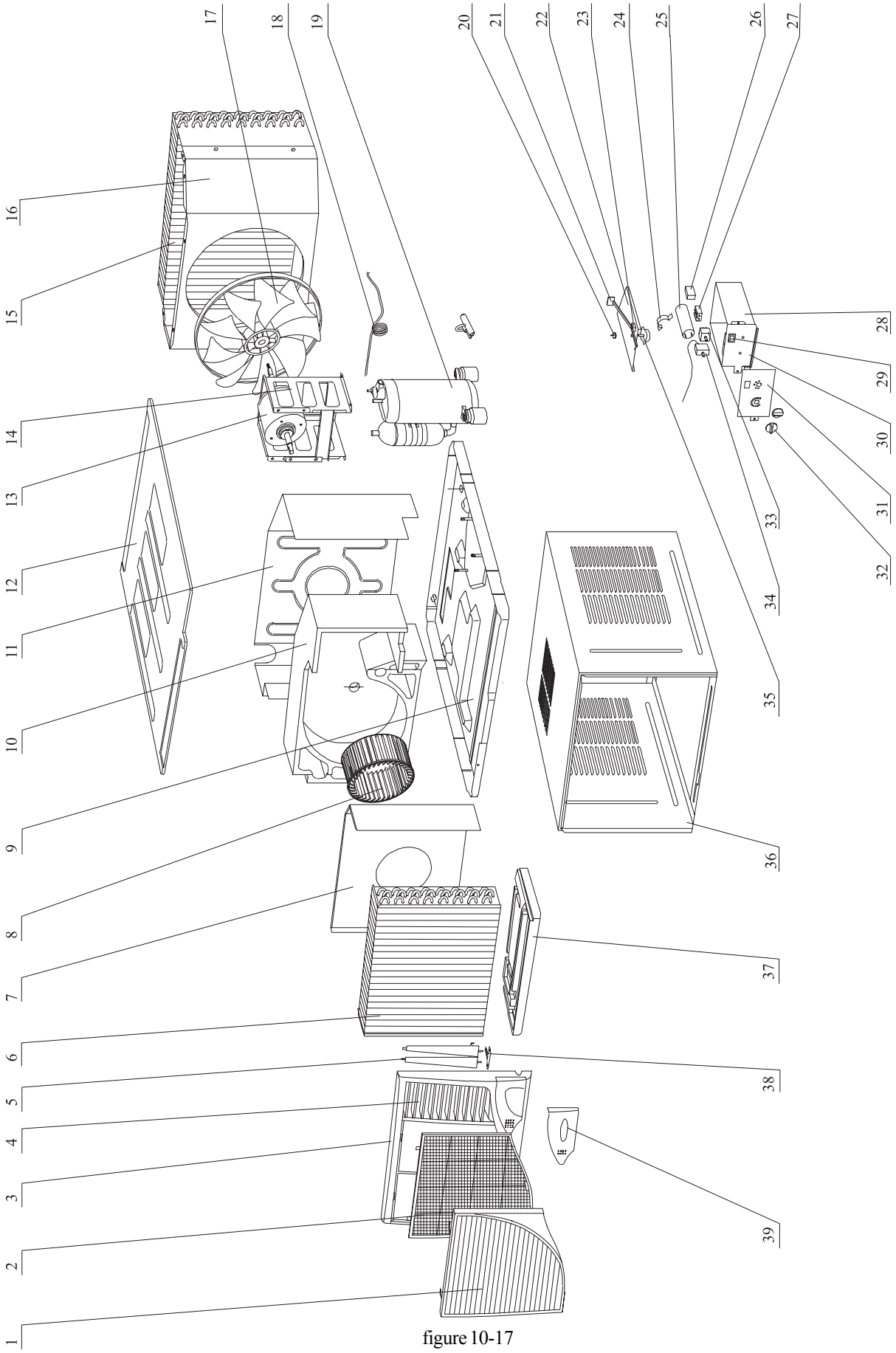

figure 10-17

Table 10-13

No	Description		Part No	Qty
			KC-46/C1	
1	Front panel	面板	20001521	1
2	Filter	过滤网	11121520	1
3	Case of front panel	面板体	20001520	1
4	Horizontal air guider	导风叶片	11511521	1
5	swing air guider	扫风叶片	11511520	1
6	Evaporator	蒸发器组件	01001402	1
7	Insulation plate of housing	蜗壳前隔板部件	01231527	1
8	Centrifugal fan	离心风叶部件	10311360	1
9	Chassis assy	底盘部件	01201521	1
10	Propeller housing	蜗壳	12101520	1
11	Front insulation plate	前隔板部件	01231528	1
12	Cover plate	上盖板部件	01251520	1
13	Motor	电机	15011020	1
14	Motor supporter	电机支架	01701520	1
15	Condenser	冷凝器组件	01101402	2
16	Rear insulation plate	后隔板部件	01231529	1
17	Axial fan	轴流风叶部件	10331522	1
18	Capillary assy	毛细管部件	03001401	1
19	Compressor	压缩机及其配件	00100141	1
20	Crank	偏心转轴	11561520	1
21	Fresh air door	风门连杆	11581520	1
22	Cover of electric box	电器盒盖板	01411012	1
23	Support of air door	风门座	26151520	1
24	Capacitor clamp	电容夹	02143431	1
25	Compressor capacitor	压缩机电容	33010710	2
26	Fan capacitor	风机电容	33010009	1
27	Terminal board 2-5	接线板2-5	42011106	1
28	Electric box	电器盒	01411009	1
29	Swing switch	波动开关	45020104	1
30	Front plate of electric box	电器盒面板	01411013	1
31	Mask	控制面板	20161313	1
32	Knob	旋钮	45031123	1
33	Main switch	主令开关	45010308	1
34	Thermostat	温控器	45040010	1
35	Swing motor	同步电机	15210203	1
36	Cabinet	外罩部件	01431006	1
37	Drain pan	接水盘	12411520	2
38	Lever of air guider	扫风连接杆	11581521	1
39	Cover of switch	盖板	20001522	1
	Power cord	电源线	40020463	1

The data are subject to change without notice.

10.9 Circuit diagram

These circuit diagrams are subject to change without notice.
Please refer to the ones stuck on the machines.

GJ7-12L

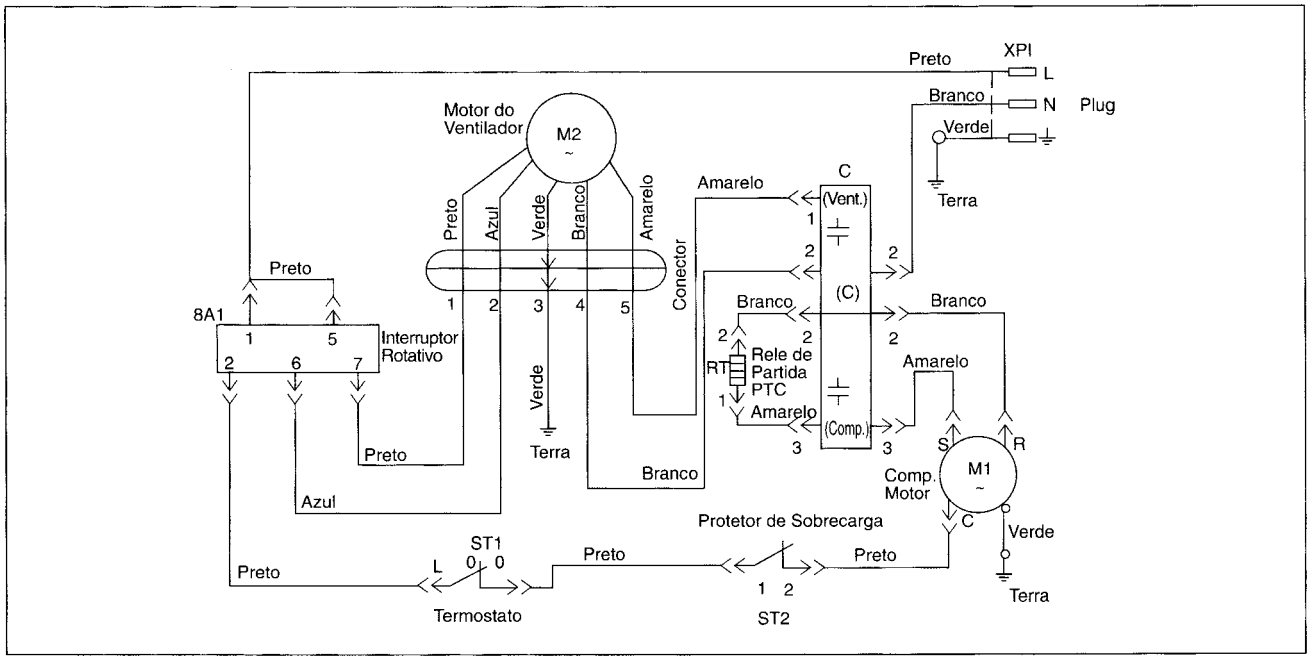

GJ7-22L

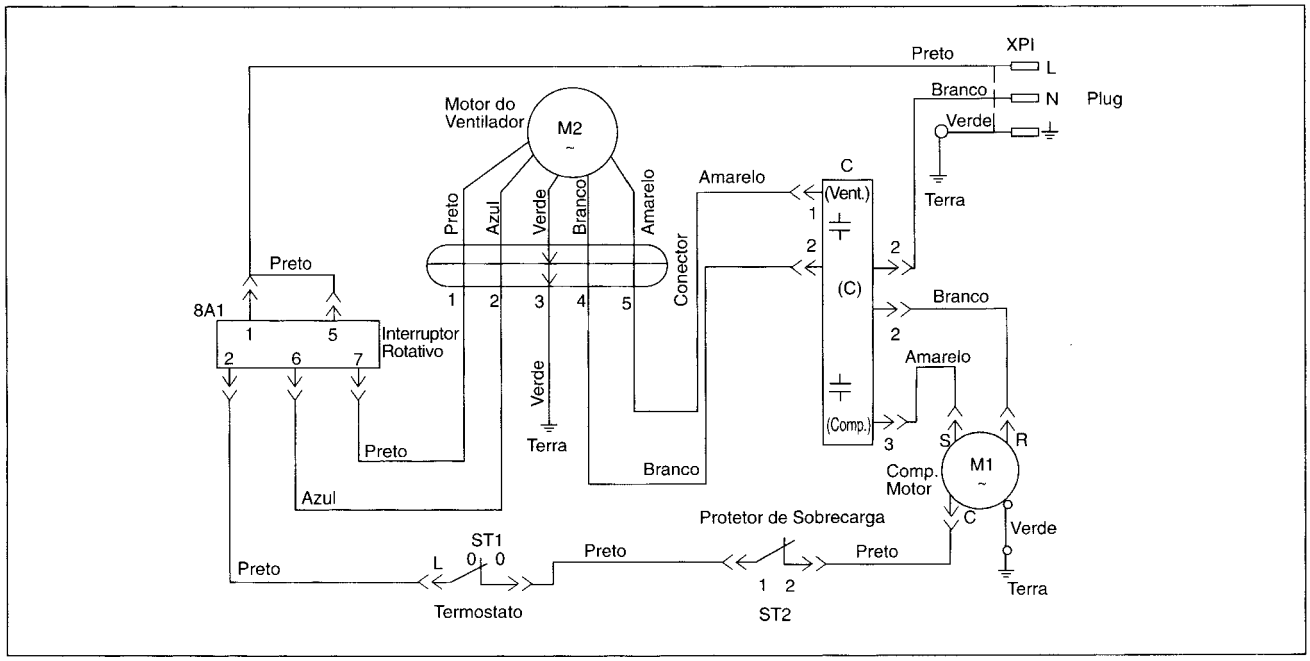

figure 10-18

KC-18/C1

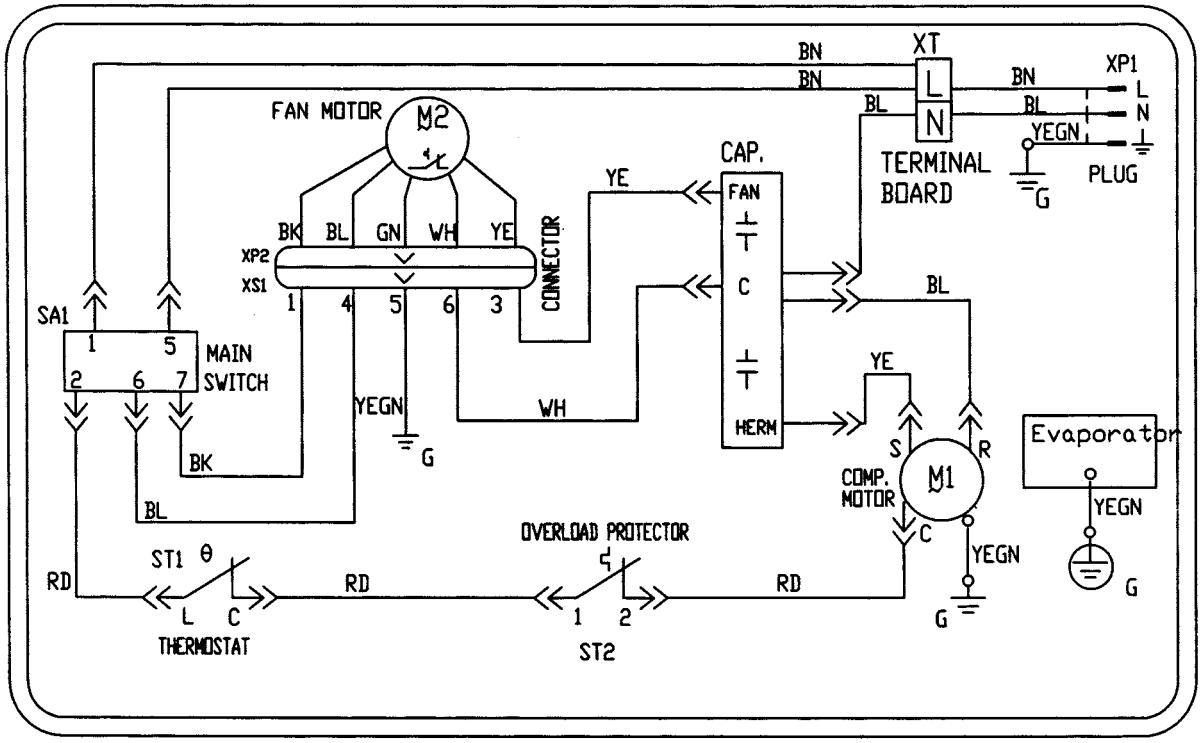

KC-32/C1 GJ12-22LM

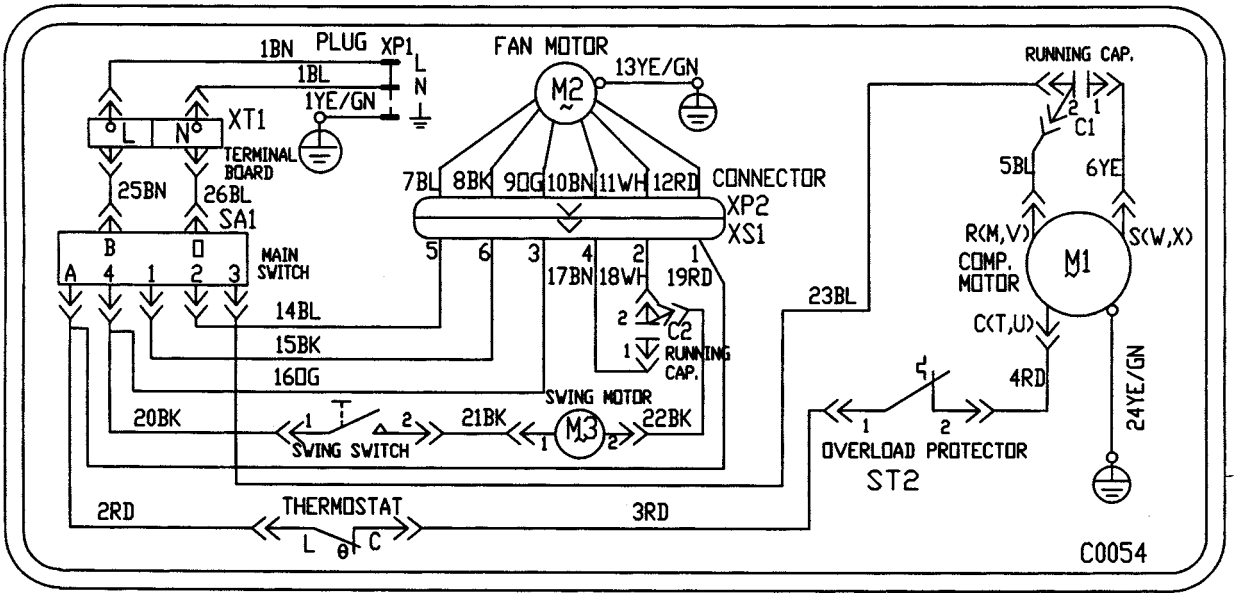

figure 10-19

GJ10-22L GJ12-22L

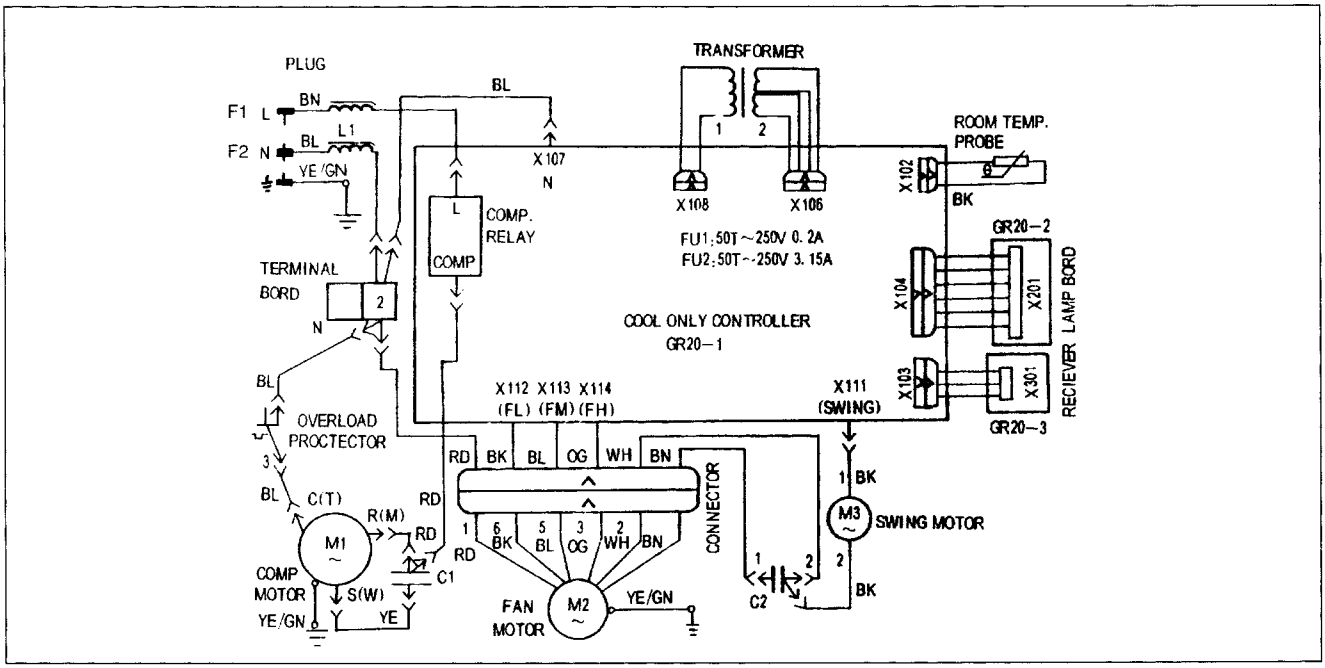

GJ10-22R

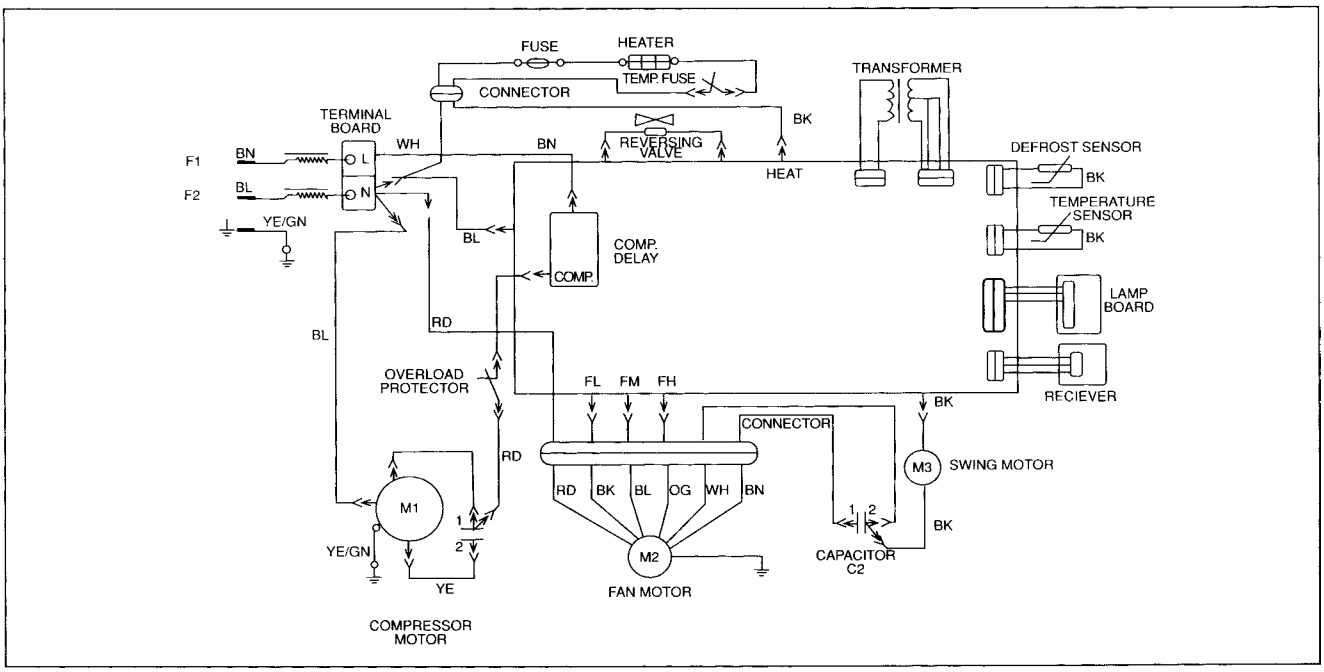

figure 10-20

GJ10-22L GJ12-12L

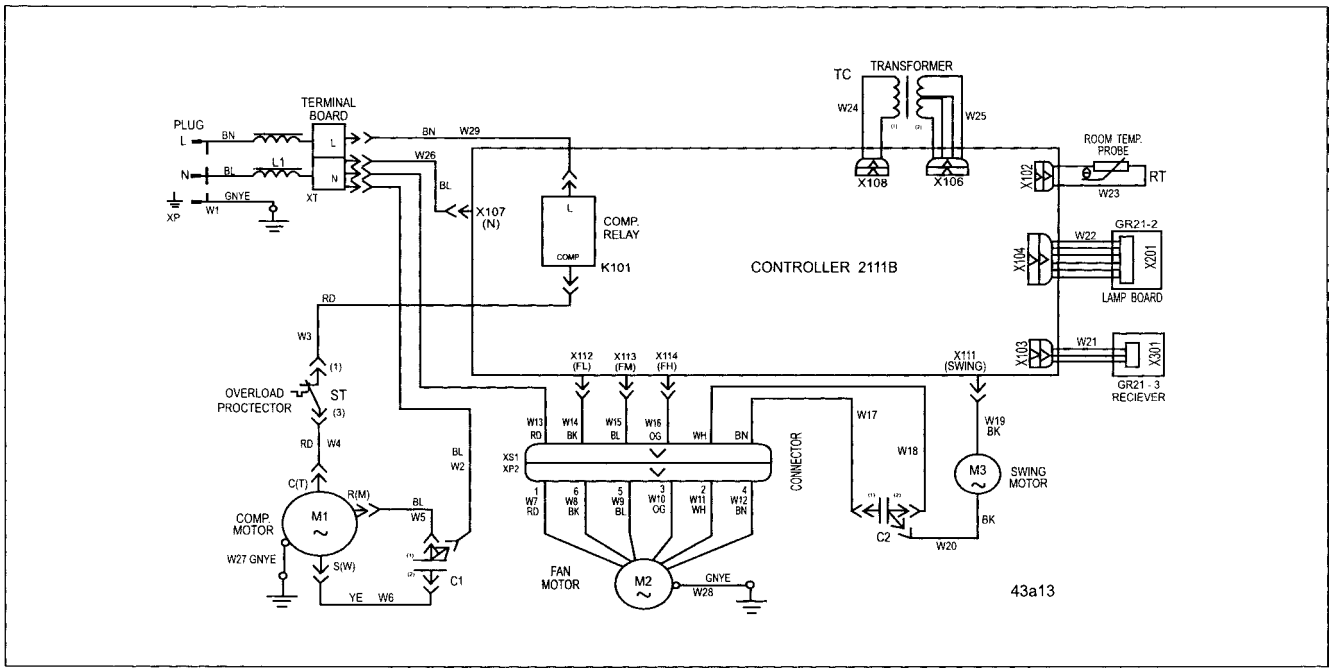

figure 10-21

KC-20/C1 KC-25/C1 GJ10-22LM

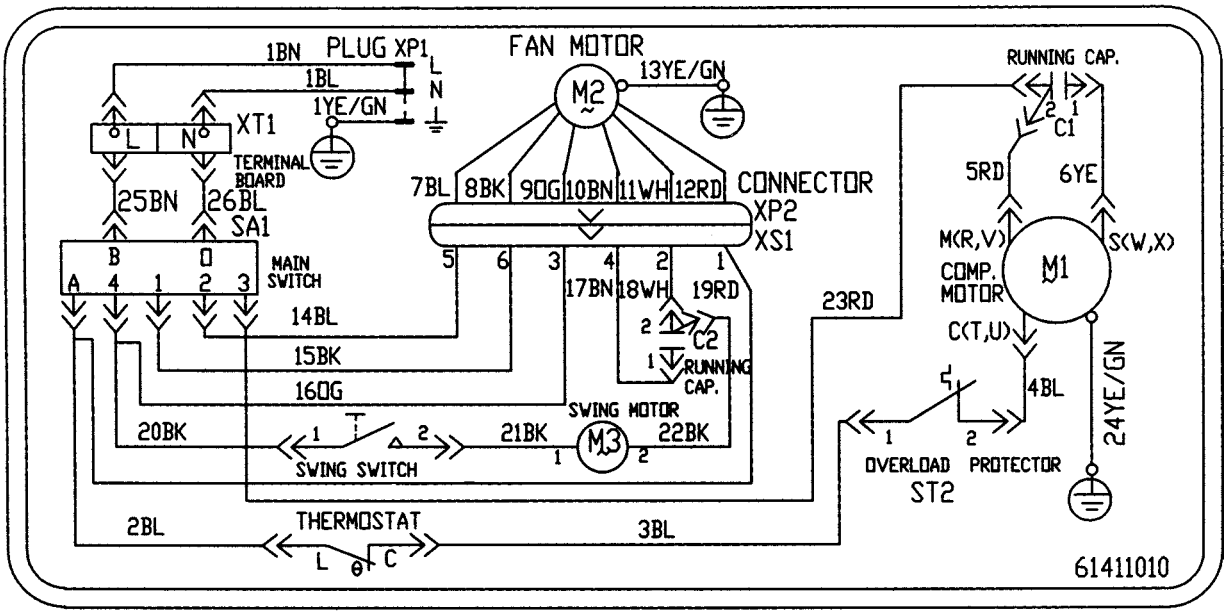

KC-25/C1A KC-32/C1A

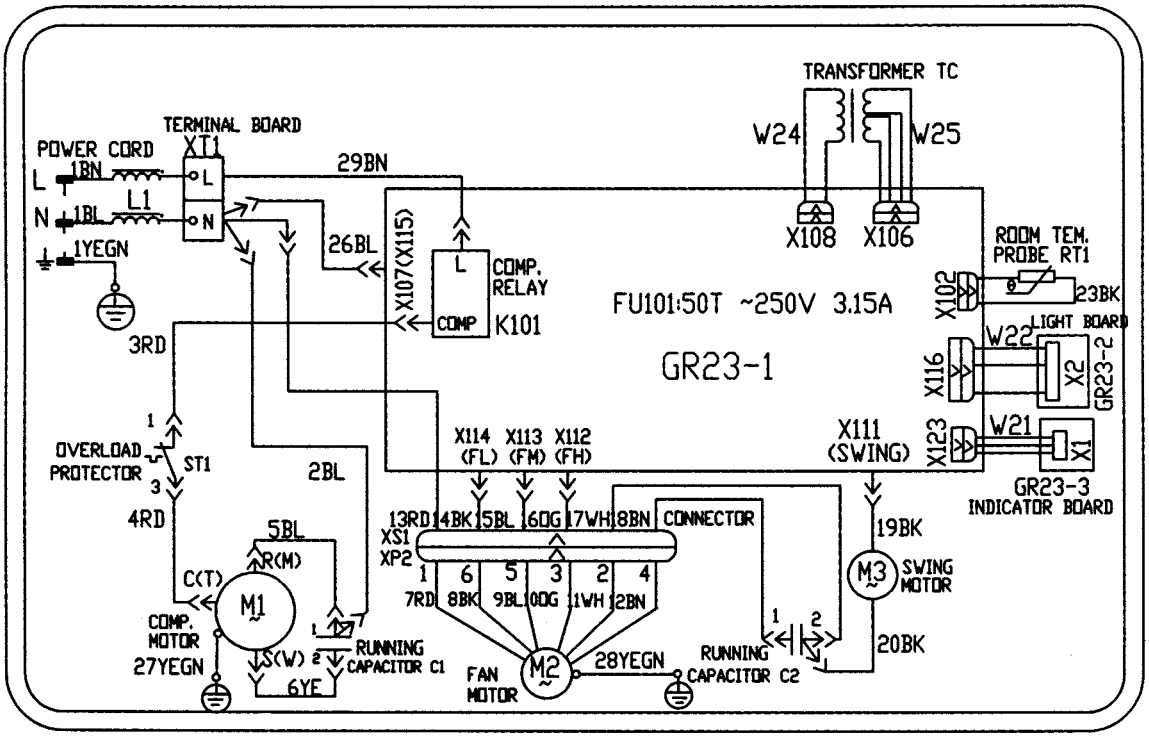

figure 10-22

KCD-25/C1 KCD-32/C1 GJ10-22RM

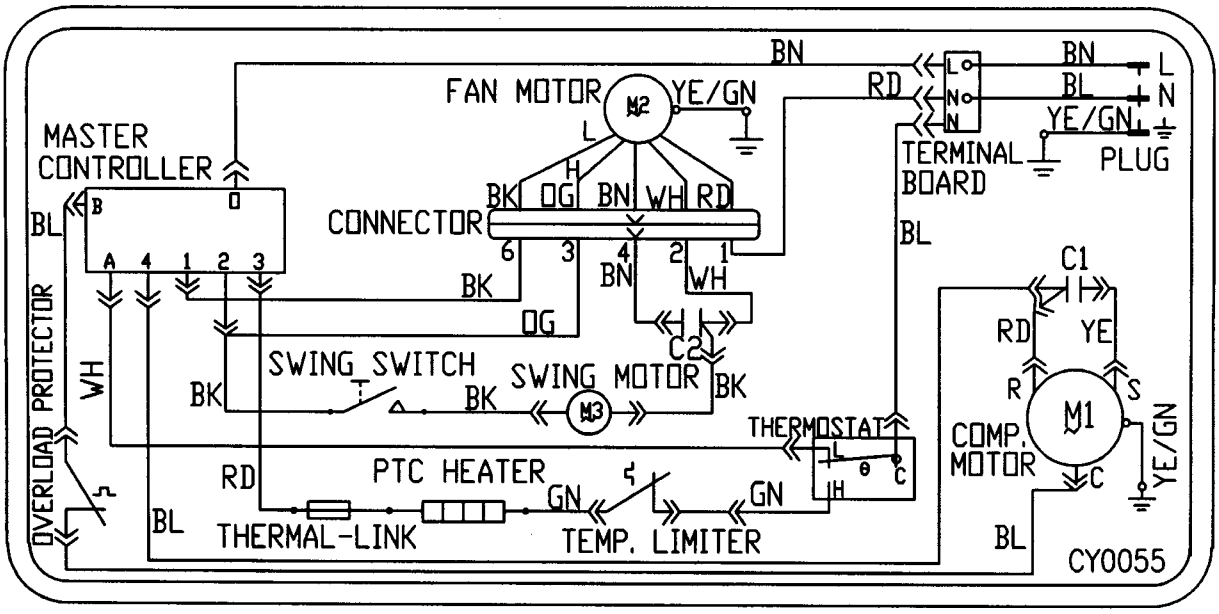

KCD-25/C1A KCD-32/C1A

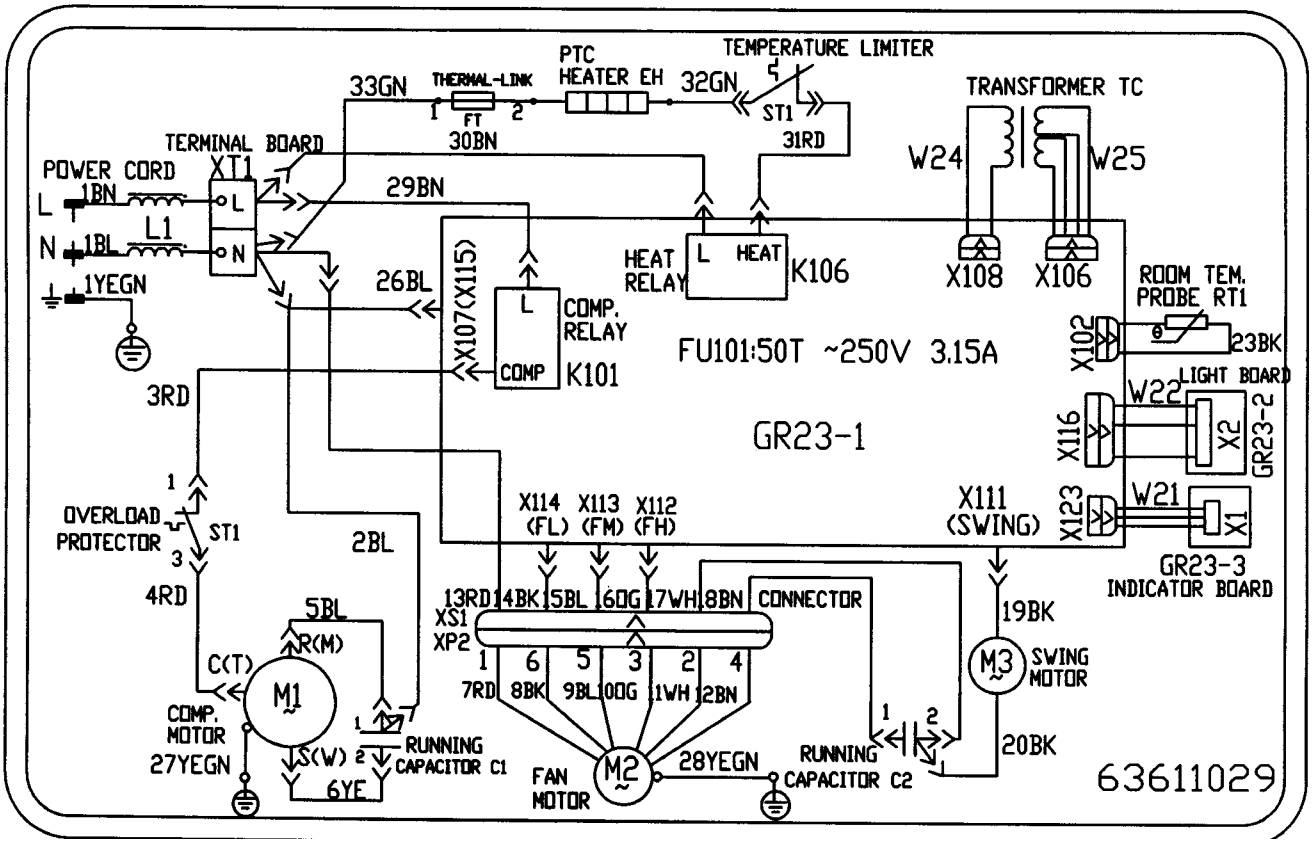

figure 10-23

KC-46/C1A KC-60/C1A

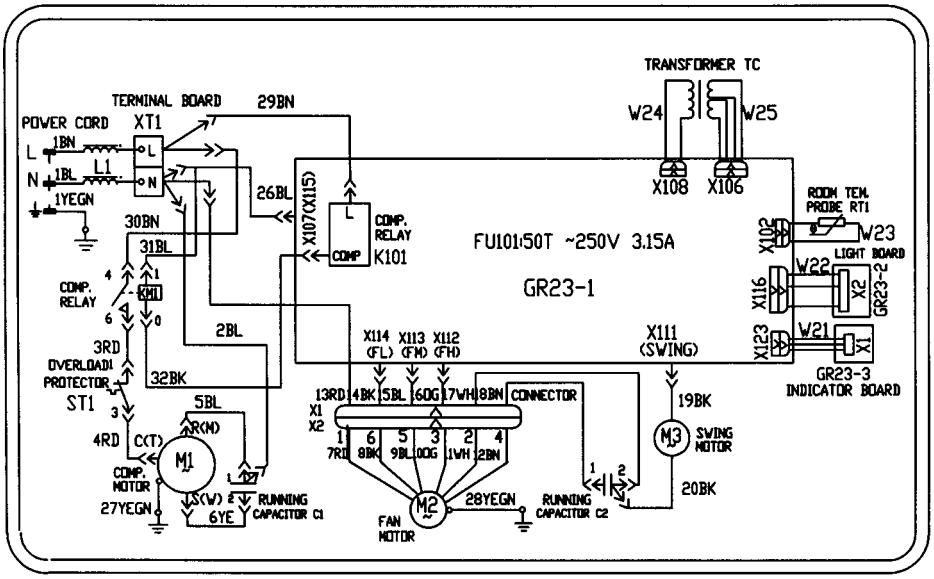

KCR(D)-46/C1A

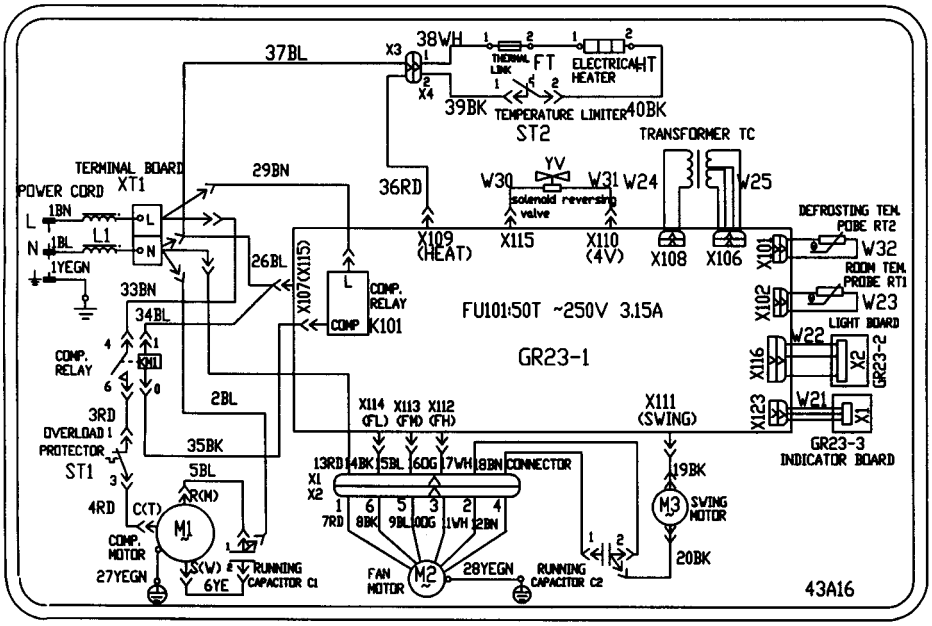

KC-46/C1

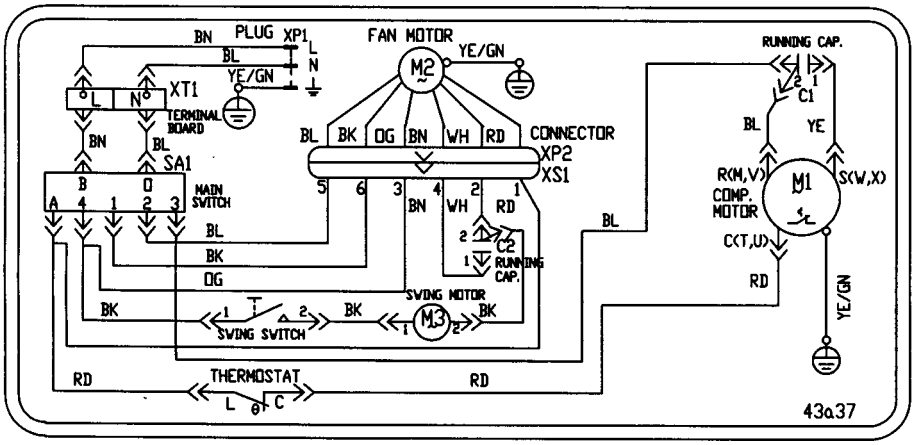

figure 10-24

10.10 PCB function manual

1. **Running mode:**
   1) COOL; 2) DRY; 3) FAN; 4) HEAT; 5) AUTO;6) MANUAL OPERATION
2. **Controlling contents:**
   1) Indoor unit fan motor(high, middle and low speed);
   2) Compressor;
   3) Sweep fan motor;
   4) Buzzer;
   5) Reversing valve;
   6) Electrical heater;
3. **The parameter to be input:**
   1) The set mode;
   2) The set temperature of the indoor (shorten form is Tset);
   3) The set speed;
   4) The mode of timer;
   5) The ambient temperature of the indoor unit (shorten form is Tin);
   6) The temperature of the defrosting sensor (shorten form is Tde);
   7) The sweep mode.
4. **The basal control modes:**
   1) **Cooling mode:**
      ① If $T_{in} \geqslant T_{set}+1$℃, cooling mode act, compressor run, unit fan motor and sweep fan motor run in the set speed, reversing valve stop;
      ② If $T_{in} \leqslant T_{set}-2$℃, compressor stop, unit fan motor and sweep fan motor run in the set speed;
      ③ If $T_{set}-2$℃ $< T_{in} < T_{set}+1$℃, keep running in the old mode;
      ④ In the cooling mode, the range of Tset is 16℃~30℃ and it can be set in CON;
      ⑤ Compressor restart in 3min after the unit stop and won't stop during the following 6min because T_{in} and T_{set}.
   2) **Drying mode:**
      ① If $T_{in} > T_{set}$, drying mode act;
      ② If $T_{in} < T_{set}$, drying mode stop, compressor stop, unit fan motor run in low speed;
      ③ If $T_{in} \leqslant T_{set}-2$℃, compressor and fan motor stop;
      ④ Unit fan motor run for 6min in low speed, compressor stop, fan motor run in low speed. After 4min, unit fan motor runsin low speed for 6min. Then run by this cycle;
      ⑤ In drying mode, the range of T_{set} is 18℃~30℃ and it can be set in CON;
      ⑥ The protecting functions are same as cooling mode.
   3) **Fan mode:**
      ① Unit fan motor can run in high, middle, low and auto speed, compressor stop;

② If the difference in temperature of T_{in} and T_{set} is more than 4℃, motor run in high speed;

③ If the difference in temperature of T_{in} and T_{set} is 2~4℃, motor run in middle speed;

④ If the difference in temperature of T_{in} and T_{set} is less than 2℃, motor run in low speed;

⑤ If the difference in temperature changed, fan speed will change when the new difference is more or less 1℃ than the old one;

⑥ In drying mode, the range of T_{set} is 18℃~30℃ and it can be set in CON;

⑦ There is no protection mode in fan mode.

4) Heating mode:

① If **Tin⩽T_{set}-1**℃, heating mode act, reversing, compressor run, unit fan motor run in the set speed and the condition of avoiding the cold wind, sweep fan motor run in the set mode;

② If **T_{in}⩾T_{set}+2**℃, compressor stop, reserving valve is still electric, the unit fan motor run in the low speed;

③ If **T_{set} < T_{in} < T_{set}+2**℃, keep running in the old mode;

④ 4-way valves stop in 4min after unit stop;

⑤ when heating time exceed 45min and T_{de}⩽-8℃, defrosting mode act, reversing valve and fan motor stop, compressor still run;

⑥ when defrosting time exceed 8min and T_{de}⩾+10℃, defrosting stop, heating mode act. Reversing valve run, fan motor run in the set speed and condition of avoiding cold wind;

⑦ Once heating mode act, and fan motor run in high or middle speed, electrical heater work and it won't work when fan motor run in low speed;

⑧ In heating mode, the range of T_{set} is 16℃~30℃ or it can be set in CON;

⑨ The conditions of avoiding cold wind: fan motor run in 30sec after compressor start;

⑩ The protection of compressor's delay: compressor restart in 3min later after it stop and won't stop in the following 6min by Tin and Tset.

5) AUTO mode:

① If T_{in}⩾T_{set}+1℃, cooling mode act, Tset=26℃, unit fan motor run in set speed
If T_{in}⩽T_{set}-2℃, compressor stop and fan motor run in low speed;
If T_{set}+2℃<T_{in}<T_{set}+1℃, the unit run in old mode;

② If T_{in}⩽T_{set}, heating mode act, T_{set}=20℃;
If T_{in}⩾T_{set}+3℃, compressor and reversal valve stop, unit fan motor run in low speed;
If T_{set}<T_{in}<T_{set}+3℃, keep the old mode.

③ Press ∧ or ∨ to change T_{set} 1~2℃ more or less;

Protection functions:

They are same as the protection functions of cooling or heating mode.

If T_{in} change, mode change first.

There is no protection for compressor that compressor won't stop in the following 6min once it run.

5. Others control:

1) Timer;
2) Manual operation;
3) Sleep;
4) Motor speed;
5) Sweep motor;
6) Running indicate light;
7) Timer indicate light;
8) Compressor indicate light;
9) Buzzer.

11.Mobile Air-conditioner (KY-20)

11.1 Summary.

figure 11-1

MODEL	NOTE
KY-20/(2001)	1Ph 220-230V~50Hz R22
KY-20N/(2001)	1Ph 220-230V~50Hz R407C
KY-20U/11156	UL STANDARD 1Ph 115V~60Hz R22
GP8-12L	1Ph 115V~60Hz R22
GP8-22L	1Ph 220V~60Hz R22

11.2 Technical specifications.

Table 11-1

Item \ Model			KY-20	KY-20
Function			Cooling	
Power source(PH-Hz-V)			1Ph 220~230V-50Hz	
Capacity		Kcal/h	1720	
		Btu/h	6826	
		W	2000	
Power input		W	800	760
Current		A	3.5	
Air volume	Front side	m^3/h	290	
	Rear side	m^3/h	340	
Dehumidifying capacity		L/h	1.5	1.3
C.O.P.			2.63	
Upper fan speed		r/min	1070/1010/940/900 (± 30)	
Power output		W	9	
Fan capacitor μF			1.5	
Upper fan type-pcs			Centrifugal fan--1	
Upper fan diameter length (mm-mm)			ϕ 146-160	
Evaporator			Tin fin copper type	
Rows-distance			3-1.5	
Working area(m^2)			2.7	
Swing motor			SM007U	
Power-speed (W-r/min)			4-4.1	
Control type			Manual	
Fuse A			Controller 3.15 Transformer 0.2	
Working capacitor(μF)			0.01	
Condenser			Tin fin copper type	
Rows-fin distance			2-1.5	
Working area(m^2)			7.2	
Compressor			Sealed rotated type	
Model			2P14S225ANJ	C-1R62H4J
Power		W	625	
Protect device			MRA99025	MRA99094
Start method			P.C.S	
Current		A	3.1	
Working temp.			Discharge temp.⩽ 115℃	
Compressor capacitor		μF	30	20(± 5%)
Lower fan speed		r/min	1120 ± 30	
Power output			23	
Working capacitor			3	
Lower fan type-pcs			Centrifugal fan-1	
Lower fan diameter-length (mm-mm)			ϕ 196-82	
Throttling method			Capillary	
Noise dB(A)			51.5	
Dimensions	Width	mm	326	
	Depth	mm	415	
	Height	mm	788	
Net weight		Kg	32	
Refrigerant			R22	
Refrigerant charge		Kg	0.55	0.51

The technical date are subject to change without notice .Please refer to the nameplate of the unit.

Table 11-2

Item \ Model			KY-20N
Function			Cooling
Power source(PH-Hz-V)			1Ph 220~230V-50Hz
		Kcal/h	1720
Capacity		Btu/h	6826
		W	2000
Power input		W	860
Current		A	3.7
Air volume	Front side	m^3/h	290
	Rear side	m^3/h	340
Dehumidifying capacity		L/h	1.3
C.O.P.			2.32
Upper fan speed		r/min	1070/1010/940/900 (± 30)
Power output		W	9
Fan capacitor μF			1.5
Upper fan type-pcs			Centrifugal fan--1
Upper fan diameter length (mm-mm)			ϕ 146-160
Evaporator			Tin fin copper type
Rows-distance			3-1.5
Working area(m^2)			2.7
Swing motor			SM007U
Power-speed (W-r/min)			4-4.1
Control type			Manual
Fuse A			Controuer3.15 Transformer 0.2
Working capacitor(μF)			0.01
Condenser			Tin fin copper type
Rows-fin distance			2-1.5
Working area(m^2)			7.2
Compressor			Sealed rotated type
Model			C-1RN57H5A
Power		W	700W
Protect device			MRA98730
Start method			P.C.S
Current		A	3.1
Working temp.			Discharge temp.⩽ 115℃
Compressor capacitor		μF	15
Lower fan speed		r/min	1120 ± 30
Power output			23
Working capacitor			3
Lower fan type-pcs			Centrifugal fan-1
Lower fan diameter-length (mm-mm)			ϕ 196-82
Throttling method			Capillary
Noise dB(A)			51.5
Dimensions	Width	mm	326
	Depth	mm	415
	Height	mm	788
Net weight		Kg	32
Refrigerant			R407C
Refrigerant charge		Kg	0.63

The technical date are subject to change without notice .Please refer to the nameplate of the unit.

Table 11-3

Item \ Model			GP8-12L	KY-20U/11156
Function			Cooling	
Power source(PH-Hz-V)			1Ph 60Hz~115V	
Capacity		W	2000	
Power input		W	800	
Current		A	7.0A	
Air volume	Front side	m^3/h	290	
	Rear side	m^3/h	340	
Dehumidifying capacity		L/h	1.3	
C.O.P.			2.5	
Fan speed		r/min	1070/1010/940/900	
Power output		W	9	
Upper fan capacitor(μF)			3	
Upper fan type-pcs			Centrifugal fan--1	
Fan diameter length (mm-mm)			ϕ 146-160	
Evaporator			Tin fin copper type	
Rows-distance			3-1.5	
Working area(m^2)			2.7	
Swing motor			SM0074	
Power-speed (W-r/min)			4-4.1	
Control type			Manual	
Fuse A			Controuer 3.15 Transformer 0.2	
Working capacitor μF			0.01	
Condenser			Tin fin copper type	
Rows-fin distance			2-1.5	
Working area(m^2)			7.2	
Compressor			Sealed rotated type	
Model			C-1R51H2E	
Power		W	650	
Protect method			MRA98637-9200	
Start method			PCS	
Current		A	6.0	
Working Capacitor℃			Discharge temp.⩽ 115℃	
Compressor capacitor		μF	25	
Lower fan speed		r/min	1200	
Power output			23	
Working capacitor			11	
Lower fan type-pcs			Centrifugal fan-1	
Lower fan diameter-length (mm-mm)			ϕ 196-82	
Throttling method			Capillary	
Noise dB(A)			51.5	
Dimensions	Width	mm	326	
	Depth	mm	415	
	Height	mm	788	
Net weight		Kg	32	
Refrigerant			R22	
Refrigerant charge		Kg	0.5	

The technical date are subject to change without notice .Please refer to the nameplate of the unit.

Table 11-4

Item \ Model			GP8-22L
Function			Cooling
Power source(PH-Hz-V)			1Ph 220-230V-50Hz
Capacity		W	2000
Power input		W	760
Current		A	3.5
Air volume	Front side	m^3/h	290
	Rear side	m^3/h	340
Dehumidifying capacity		L/h	1.3
C.O.P.			2.63
Upper fan speed		r/min	1070/1010/940/900
Power output		W	9
Upper fan capacitor μF			1.5
Upper fan type-pcs			Centrifugal fan--1
Fan diamete length (mm-mm)			ϕ 146-160
Evaporator			Tin fin copper type
Rows-distance			3-1.5
Working area(m^2)			2.7
Swing motor			SM007U
Power-speed (W-r/min)			4-4.1
Control type			Manual
Fuse A			3.15/0.2
Working capacitor μF			0.01
Condenser			Tin fin copper type
Rows-fin distance			2-1.5
Working area(m^2)			7.2
Compressor			Sealed rotated type
Model			C-1R50H6K
Power		W	625
Protect method			MRA98635
Start method			PSC
Current		A	3.3
Working capacitor ℃			Discharge temp.⩽ 115℃
Compressor capacitor		μF	17.5
Lower fan speed		r/min	1200
Power output			23
Working capacitor			2.5
Lower fan type-pcs			Centrifugal fan-1
Lower fan diameter-length (mm-mm)			ϕ 196-82
Throttling method			Capillary
Noise dB(A)			51.5
Dimensions	Width	mm	326
	Depth	mm	415
	Height	mm	788
Net weight		Kg	32
Refrigerant			R22
Refrigerant charge		Kg	0.53

The technical date are subject to change without notice .Please refer to the nameplate of the unit.

11.3 Outlines and dimensions

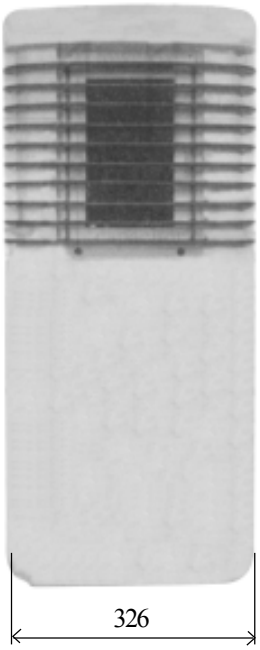

Front

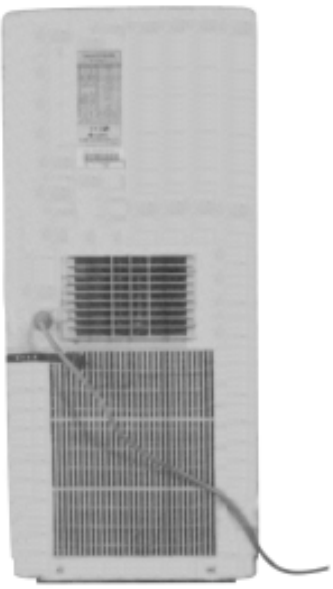

Rear

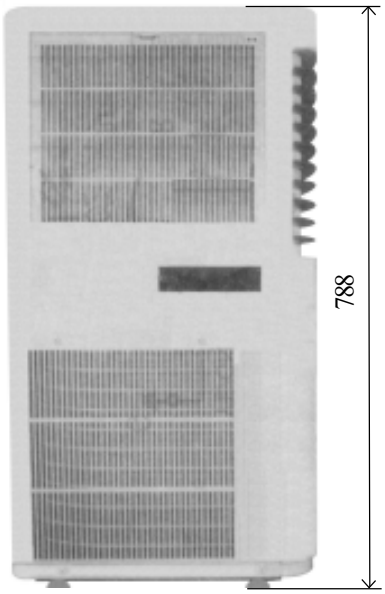

Left-side

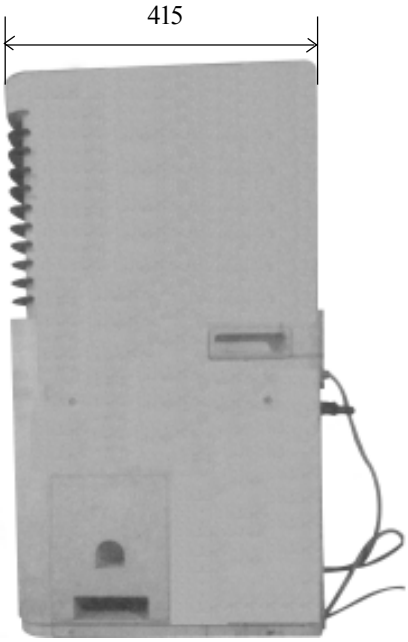

Right-side

figure 11-2

11.4 Explosive view

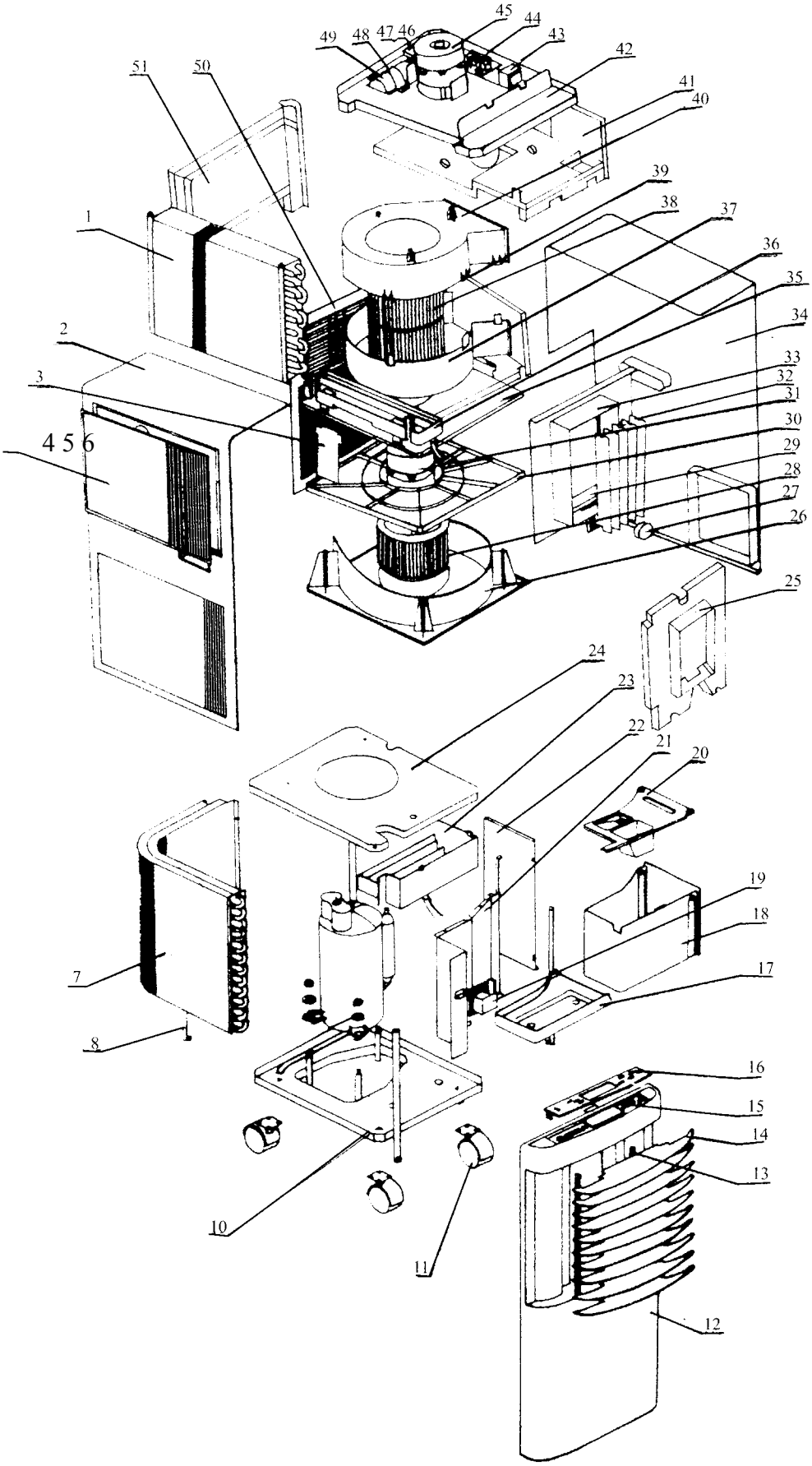

figure 11-3

11.5 Spare parts list

Table 11-5

No.	Description		Part No.						Qty
			KY-20/(2001)	KY-20/(2001)	KY-20N/(2001)	KY-20U/11156	GP8-12L	GP8-22L	
1	evaporator	蒸发器组件	01036001	01036001	01036001	01036001	01036001	01036001	1
2	left case	左侧板	20056022	20056022	20056022	20056020	20056022	20056022	1
2	or	或	20056023	20056023	20056023	\	20056023	20056023	
3	connection sheet	连接板	01386001	01386001	01386001	01386001	01386001	01386001	2
4	filter grill	过滤栅	22416002	22416002	22416002	22416002	22416002	22416002	1
4	or	或	22416003	22416003	22416003	22416003	22416003	22416003	
5	filter	过滤网	11126003	11126003	11126003	11126003	11126003	11126003	1
5	or	或	11126001	11126001	11126001	11126001	11126001	11126001	
6	filter fixer	过滤网卡片	26116012	26116012	26116012	26116012	26116012	26116012	6
7	condenser	冷凝器组件	01136011	01136011	01136011	01136011	01136011	01136011	1
8	supporting strip	支承架	01796002	01796002	01796002	01796002	01796002	01796002	4
9	compressor C-1R62H4J	压缩机及配件 C-1R62H4J	00100312	\	\	\	\	\	1
9	compressor 2P14S225ANJ	压缩机及附件 2P14S225ANJ	\	00100005	\	\	\	\	1
9	compressor C-1R50H6K	压缩机及附件 C-1R50H6K	\	\	\	\	\	00100307	1
9	compressor C-1R51H2E	压缩机及附件 C-1R51H2E	\	\	\	00100308	00100308	\	1
9	compressor C-1RN57H5A	压缩机及附件 C-1RN57H5A	\	\	00100337	\	\	\	1
10	base assy	底盘	01216002	01216002	01216002	01216002	01216002	01216002	1
11	castor	脚轮	24236001	24236001	24236001		24236001	24236001	4
12	front panel	前面框	26116005	26116005	26116005	26116004	26116005	26116005	1
12	or	或	26116006	26116006	26116006	\	26116006	26116006	
13	guide louver conjunction	导风连杆	10586002	10586002	10586002	10586001	10586002	10586002	2
14	air guide louver	导风叶片	10516003	10516003	10516003	10516002	10516003	10516003	10
14	or	或	10516004	10516004	10516004	\	10516004	10516004	
14	or	或	10516005	10516005	10516005	\	10516005	10516005	
15	LCD support	控制器液晶支架	24216221	24216221	24216221	24216221	24216221	24216221	1
16	PCB support	P 板固定架组件	24226002	24226002	24226002	24226002	24226002	24226002	1
17	drain tank base	水箱底板	22226001	22226001	22226001	22226001	22226001	22226001	1
18	drain tank	水箱组件	20186005	20186005	20186005	20186005	20186005	20186005	1
19	switch assy	开关盒组件	20106004	20106004	20106004	20106004	20106004	20106004	1
19.1	level switch	移动空调水位开关	45026001	45026001	45026001	45026001	45026001	45026001	1
20	drain tank cover	水箱盖	22246002	22246002	22246002	22246002	22246002	22246002	1
21	back insulation plate	底隔板组件	01236011	01236011	01236011	01236011	01236011	01236011	1
22	compressor protection plate	压缩机护板组件	1496002	1496002	1496002	1496002	1496002	1496002	1
23	condenser tray	冷凝器水槽组件	06126002	06126002	06126002	06126002	06126002	06126002	1
24	condenser cover	冷凝器盖板组件	01176011	01176011	01176011	01176011	01176011	01176011	1
25	foam of outlet grill	出风栅泡沫	52016104	52016104	52016104	52016104	52016104	52016104	1
26	lower insulation plate	下隔板组件	20056031	20056031	20056031	20056031	20056031	20056031	1
27	swing motorSM007U	同步电机 SM007U	15216001	15216001	15216001	\	\	15216001	1
27	swing motor SM007	同步电机 SM007	\	\	\	15210207	15210207	\	1
28	lower centrifugal fan	下离心风叶	10316006	10316006	10316006	10316006	10316006	10316006	1
28	or	或	10316007	10316007	10316007	10316007	10316007	10316007	
29	wing louver conjunction	扫风连杆	10586008	10586008	10586008	10586007	10586008	10586008	1
29.1	axes	扫风转轴	10566002	10566002	10566002	10566001	10566002	10566002	1
30	middle insulation plate	中隔板组件	20056029	20056029	20056029	20056029	20056029	20056029	1
31	lower motor YD23D	下电机 YD23D	15016007	15016007	15016007	\	\	\	1

Table 11-5 continue

No.	Description		Part No.						Qty
			KY-20/(2001)	KY-20/(2001)	KY-20N/(2001)	KY-20U/11156	GP8-12L	GP8-22L	
31	lower motor YD23C	电机YD23C	\	\	\	\	\	15016005	
31	lower motor YD23E	电机YD23E	\	\	\	15016008	15016008	\	
32	swing louver	扫风叶片	10516029	10516029	10516029	10516028	10516029	10516029	5
33	air outlet grill	前出风栅	22416004	22416004	22416004	22416004	22416004	22416004	1
34	right case	右侧板	20056015	20056015	20056015	20056013	20056015	20056015	1
34	or	或	20056016	20056016	20056016	20056016	20056016	20056016	
35	inside supporting plate	中支撑板	01796001	01796001	01796001	01796001	01796001	01796001	1
36	lower foam of duct	风道下泡沫组件	12316010	12316010	12316010	12316010	12316010	12316010	1
37	lower propeller house	下蜗壳	22206002	22206002	22206002	22206002	22206002	22206002	1
38	upper centrifugal fan	上离心风叶	10316004	10316004	10316004	10316004	10316004	10316004	1
38	or	或	10316005	10316005	10316005	10316005	10316005	10316005	
39	fan nesting	风扇嵌件	10316002	10316002	10316002	10316002	10316002	10316002	1
40	upper propeller	上蜗壳	22206001	22206001	22206001	22206001	22206001	22206001	1
41	upper foam of duct	风道上泡沫	12316201	12316201	12316201	12316201	12316201	12316201	1
42	upper insulation plate	上隔板组件	20056025	20056025	20056025	20056024	20056025	20056025	1
43	transformer SC24V1	电源变压器 SC24V1	\	\	\	\	\	43110166	1
43	transformer SC24(130℃)	电源变压器 SC24(130℃)	43110165	43110165	43110165	\	\	\	1
43	transformer SC24B	电源变压器SC24B	\	\	\	\	43110192	\	1
43	transformer SC24V3(130℃)	电源变压器 SC24V3(130℃)	\	\	\	43110008	\	\	1
44	PCB	控制器6601A(M)	30026002	30026002	30026002	\	\	\	1
44	PCB 6601D(M)	控制器 6601D(M)	\	\	\	\	\	30026005	1
44	PCB 6601C(M)	控制器 6601C(M)	\	\	\	\	30026003	\	1
44	PCB 6601CF	控制器 6601CF	\	\	\	30026007	\	\	1
45	upper motor YD9D	上电机 YD9D	15016003	15016003	15016003	\	\	\	1
45	upper motor YD9C	上电机YD9C	\	\	\	\	\	15016001	1
45	upper motor YD9E	上电机YD9E	\	\	\	15016004	15016004	\	1
46	upper motor capacitor	上风机电容 1.5uF/450V(VDE)	33010020	33010020	33010020	\	\	33010020	1
46	upper motor capacitor	上风机电容 3uF/450VAC	\	\	\	33000010	33000010	\	1
47	lower motor capacitor	下风机电容 3uF/450V(VDE)	33010027	33010027	33010027	\	\	\	1
47	lower motor capacitor	下风机电容 2.5uF/450VAC	\	\	\	\	\	33010019	1
47	lower motor capacitor	下风机电容 11uF/300VAC	\	\	\	33000011	33000011	\	1
48	capacitor clamp	电容夹	02146001	02146001	02146001	02146001	02146004	02146004	1
49	compressor capacitor 20uF/450V(VDE)	压缩机电容 20uF/450V(VDE)	33010729	\	\	\	\	\	1
49	compressor capacitor 20uF/450V(VDE)	压缩机电容 30uF/450V	\	33000021	\	\	\	\	1
49	compressor capacitor 17.5uF/400VAC	压缩机电容 17.5uF/400VAC	\	\	\	\	\	33010731	1
49	compressor capacitor 25uF/450VAC	压缩机电容 25uF/450VAC	\	\	\	33000025	33000017	\	1
49	compressor capacitor 15uF/450VAC	电容 15uF/450VAC	\	\	33010728	\	\	\	1
50	rear case	后板组件	20006006	20006006	20006006	20006006	20006006	20006006	1

Table 11-5 continue

No.	Description		Part No.						Qty
			KY-20/(2001)	KY-20/(2001)	KY-20N/(2001)	KY-20U/11156	GP8-12L	GP8-22L	
51	rear foam of duct	风道后泡沫	12316202	12316202	12316202	12316202	12316202	12316202	1

The data are subject to change without notice.

11.6 Installation guide

1.Installation of the air filter

Clean the air filter at least once every two weeks to prevent inferior fan operation because of dust.

(1) Pull out the handle of the filter cover and lift it up, see fig 184(a),(b)

(a) Fig. 184 (b)

(2) Take out the air filter from its cover

(3) Wash the air filter by immersing it gently in warm(about 40℃ water with a neutral detergent and dry it thoroughly in a shady place.

a. attach the air filter to the filter cover with the attachment hooks on the inside surface of the cover.

b. Place the nails at the bottom of the filter cover into the holes in the case, then thrust in using the handle.

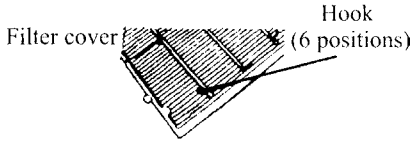

Fig. 185

2. Method of continous drainage

(1) Take out the drain pipe.

(2) Pull out the drainage outlet, see fig 186

don't pull out the drainage outlet except for this application, otherwise the drain will leak.

don't make the continuous drainage outlet clogged to avoid resulting in malfunction.

(3) Hold the continuous drainage outlet and insert the pipe see fig 187(a),(b)

Insert the pipe into the outlet firmly

(4) Drainage

When draining out water, don't press the drainage forcedly especially by the children.

Don't bend the pipe too much.

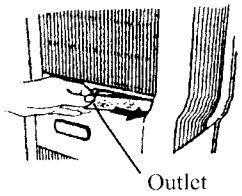

Fig. 186

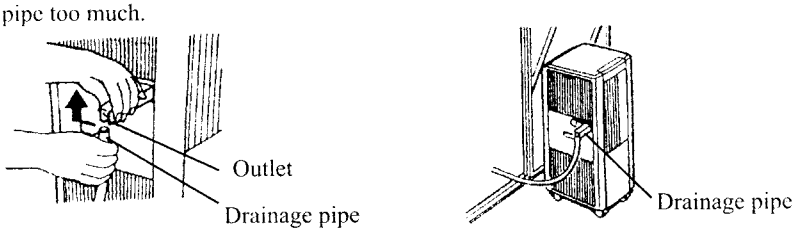

(a) (b)

Fig. 187

3. Caution

(1) When the unit is operating or just stopped, water will leak out if the outlet is pulled out.Please hold it with rugs and connect the drainage pipe quickly.

(2) When dismantling, please hold the drainage and draw out the pipe.

Optional duct mounting instructions

(1) When cooling, attach one end of the exhaust air outlet of the unit to the dehumidifier air outtake

(2) Attach the other end of the duct to the nearby window, see fig 188,189.

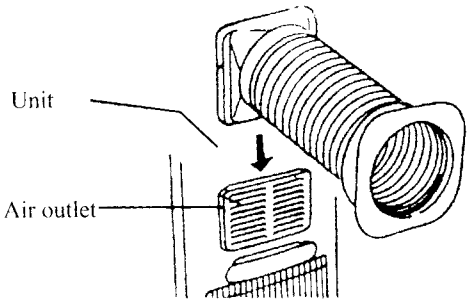

Fig 188

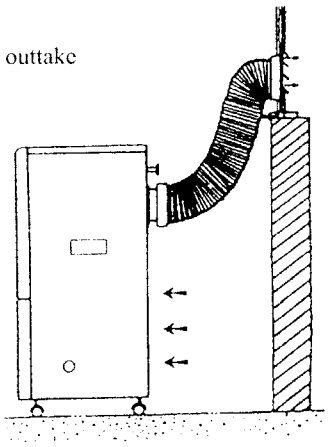

Fig. 189

4. Note

try not to connect the exhaust pipe to the unit in dehumidifying operatton
don't put heavy objects or step on the exhaust pipe. or it will be deformed and reduce cooling capacity.
don't bend the pipe more than 2 circles, see fig190
don't connect other pipes to the exhaust pipe, see fig191
don't use the unit in heavy raining and windy days, or the water may be flow inside to cause malfunction.

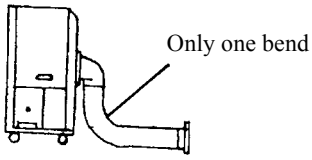

Fig 190

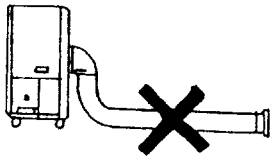

Fig 191

5. Drainage

(1) When the tank is full, the beep will sound. Be sure to pull out the tank arter 2 minutes.
(2) Empty the tank.
(3) Put the tank back into the unit. See fig.207 (a) (b) (c)

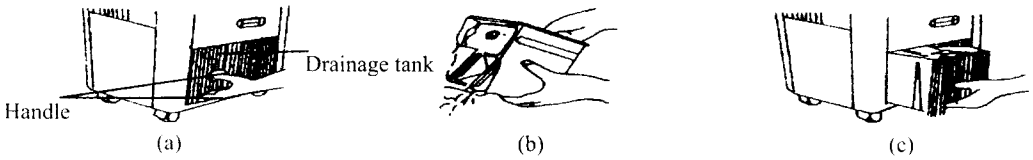

6. Trouble-shooting

Trouble shooting, see table

No.	Problem	Possible cause	Remedy
1	Unit does not operate when switch on	Power supply is off or abnormal fuse blew out Coppered plate is bad Short circuit in temp. sensor Poor contact between main PCB and power PCB or the output of transformer	Check the power and make sure the voltage is within Replace the fuse Check and repair the copper plate Check and repair the temp..sensor Reweld the output
2	the power indicator is on but unit does not operate	Open circuit in temp. sensor drain tank is ful or short circuit in the switch	Check the sensor Empty the tank and check the switch
3	Poor cooling	Leakage of refrigerant Refrigerant system clogged Compressor malfunction	Recharge the refrigerant Clean the system and recharge Replace compressor
4	Much noise	Poor contact between parts Fan axle is not straight Compressor malfunction	Tighten the parts Replace the fan Replace compressor
5	Non-stop when tank is full	Open circuit in switch	Repair the switch
6	Swing fan is not working or abnormal	Poor contact between parts Poor contact in the circuit Swign motor is broken Mechnical resistance force	Fix the parts Reweld welding spots Replace swing motor Repair or replace swing fan axle, conjuction or swing louver
7	LCD is not clear	Poor contact at welding spot LCD malfunction	Check the spot Replace LCD or main PCB

It is normal when the following happens
1. When switch on right after power-off, the compressor indictor will light up but not start after 20-30 seconds.
2. When switch off, the compressor can't start within 3 min. because of the protect function.

Be sure to ask professional technicians to do the repairting work

Cut off the power befor repairing or it will be dangerous.

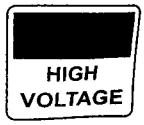

Be cautious of high voltage on terminal board, upper fan motor lower fan motor and compressor.

11.7 Circuit diagram

These circuit diagrams are subject to change without notice.
Please refer to the ones stuck on the machines.

KY-20/(2001) KY-20N/(2001)

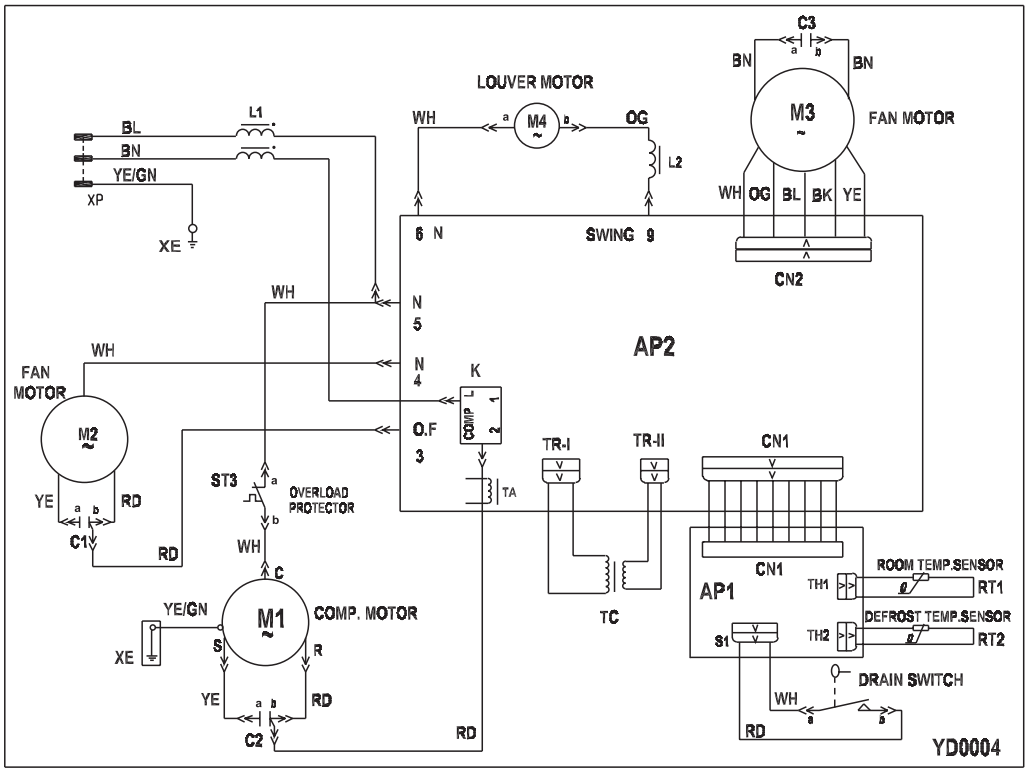

GP8-22L

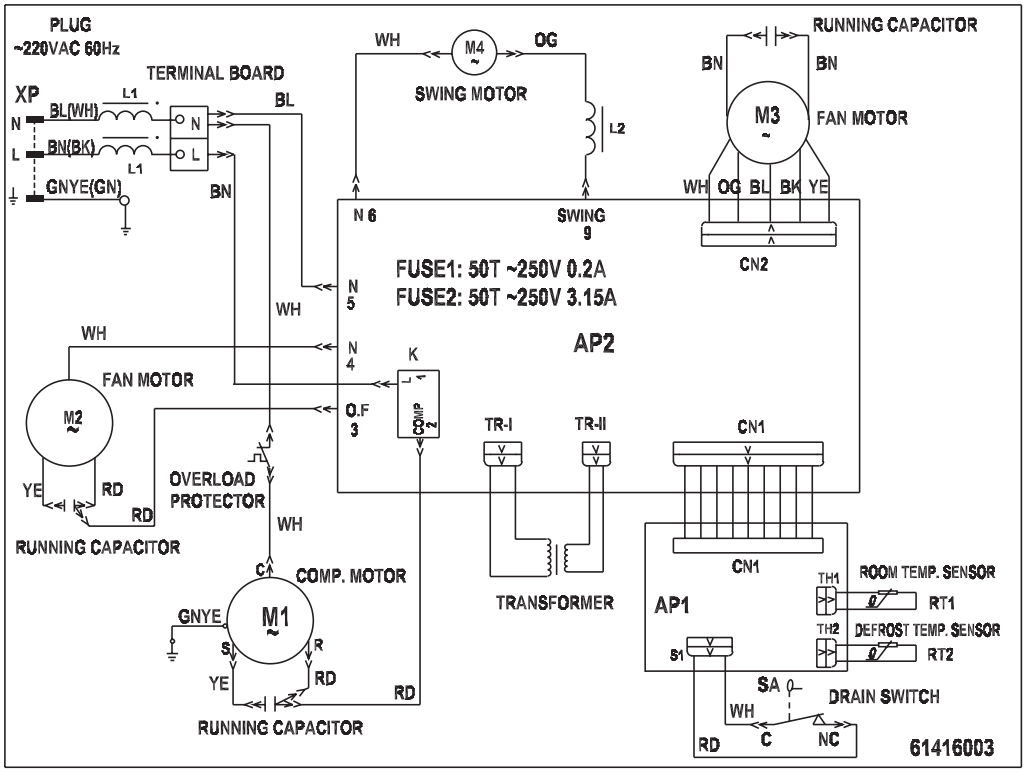

figure 11-4

GP8-12L KY-20U/11156

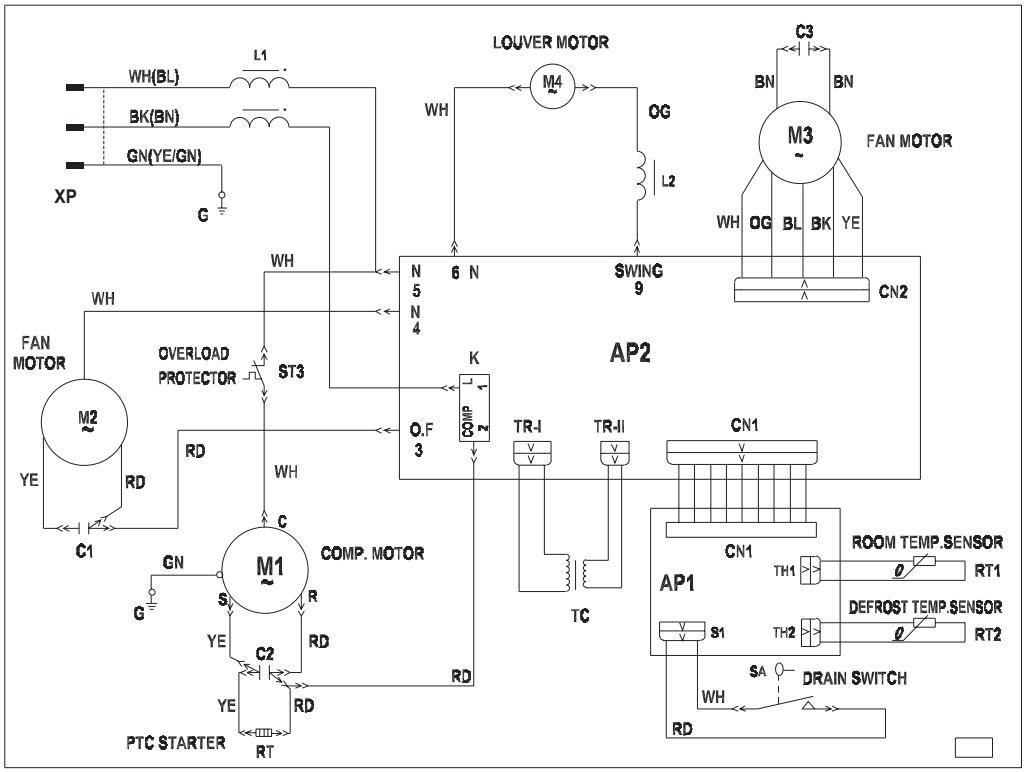

figure 11-5

11.8 PCB function manual

The 4 In 1 PCB function manual of the Mobile

1. **Adequate models:**
   Mobile split Air-conditioner about 7,000Btu;
   Mobile Air-conditioner about 7,000Btu;
   Mobile split Air-conditioner about 9,000Btu;
   Mobile Air-conditioner about 9,000Btu.
2. **Running mode:**
   1) FAN; 2) COOL; 3) DRY; 4) HEAT; 5) AUTO.
3. **Controlling modes:**
   1) Control panel; 2) Remote control.
4. **The parameter to be input:**
   1) **Analog quantity:** the ambient temperature of the indoor unit (shorten form is T_{in})
      the temperature of deforesting (shorten form is T_{de})
      the evaporator temperature of the indoor unit (shorten form is T_{eva})
      the current of the compressor (shorten form is I_{co})
   2) **Switch quantity:** the switch of the higher water level
      the switch of the lower water level
   3) **Controlled Input:** by the controlling panel;
      by the remote control.
5. **The parameter to be output:**
   1) **Output quantity of transformer:** Indoor fan motor(3-speed)
      Outdoor fan motor
      Compressor
      Reversing valve
      Indoor & outdoor water pump
      Sweeping fan motor
      Electrical heater
   2) **Output quantity of LED:** the light of the running compressor (LED1 green)
      The light of the buzzer (LED2 red)
   3) **Others:** LCD
      Buzzer
6. **The basal control modes:**
   1) **Cooling mode:**
      If $T_{in} \geqslant T_{set}$, cooling mode act, compressor and outdoor unit run, and indoor unit run in the set speed;
      If $T_{in} \leqslant T_{set}-1$℃, the unit will be stop from cooling mode, compressor and outdoor unit stop,

and indoor unit still run in the set speed;

If T_{set}-1℃＜T_{in}＜T_{set}, keep running in the old mode;

In the cooling mode, the range of T_{set} is 16℃~30℃, the initialize is 25℃

LCD: 9,000Btu series display “cooling”, ” the set fan speed”, “T_{set}”

12,000Btu series display dynamic “the falling snow”, “the fan revolving in the set speed”, ”the set fan speed”, and “T_{set}”

The protecting functions:

① **Avoiding freezing:**

Once the compressor works for 10min, when T_{eva} ≤ -6℃ for over 8sec, the compressor and the outdoor unit fan motor stop, the indoor unit fan motor run in the set speed. After the compressor stops for 3min and T_{eva}≥8℃, everything runs in the old speed.)

② **Water pump control and the protection for the full water:**

The indoor unit water pump will work when the lower water switch is close till the lower water switch open for 2min.

The outdoor unit water pump will work after the indoor unit water pump works for 1min at the 1st time, the outdoor unit water pump will stop when the compressor stop and it will linkage with compressor in future.

When the higher water switch is close, the buzzer will alarm “click, click” 8 times, LCD display the wrong code “E4” in the location of “setting temperature” (for the 9,000Btu series, LED2 flash), it means the indoor unit water pump does not work and the unit stop till the protection is canceled.

There is no water pump in the mobile air-conditioner, 1K resistance is used to short the lower water pump. The higher water pump is close when the water tank is full, the buzzer alarm “click, click” 8 times LCD display the wrong code “E4” in the location of “setting temperature” (for the 9,000Btu series, LED2 flash), it means the indoor unit water pump does not work and the unit stop till the protection is canceled.

The indoor unit and outdoor unit water pumps do not work in the mode of fanning and heating.

③ **Protecting the compressor:**

The distance between 2 times running won’t less than 3min once the compressor work and it will not stop by the changing of the temperature in the next 6min. The compressor and the outdoor unit fan motor will stop when it is change from heating mode to cooling mode.

④ **The protection of overload current (low voltage protection):**

When the I_{co}≥13A for 3sec, the unit fan only (for 9,000Btu series, LED2 flash), LCD display the wrong code E1, it means the I_{co} is exceed the set current, compressor stop till the fault is canceled in 3min.

2) Drying mode:

The indoor unit fan motor runs in the low speed, compressor and outdoor unit fan motor run continually, the T_{set} will not be displayed and changed.

For 9,000Btu series, it will be displayed the “drying” sign and “low speed”, for 12,000Btu series, it will be displayed the picture of “water dripping” dynamic, the fan runs slowly.

The protection functions are same as the cooling mode, for 12,000Btu series, it will be displayed the picture of “water is overflow” dynamic when the water tank is full.

3) Heating mode:

- **Mobile split air-conditioner (cooling & heating)**

① If $T_{in} \leqslant T_{set}+3$℃, heating mode act, reversing, compressor and outdoor unit fan motor run, indoor unit fan motor runs in the set speed and the condition of avoiding the cold wind;

② If $T_{in}=T_{set}+4$℃, keep running in the old mode;

③ If $T_{in} \geqslant T_{set}+5$℃, compressor and outdoor unit fan motor stop, reserving valve is still electric ,the indoor unit fan motor runs in the set speed and flow the rest heat;

In the heating mode, the 4-way valve will be electroless in 2min after the unit is turned off.

④ **LCD**: 9,000Btu series display the sign of heating, indoor unit fan motor speed and T_{set}. 12,000Btu series display the sun light radiate outside dynamic, the fan runs in the set speed and T_{set}.

⑤ **Electrical heater:**

When the indoor unit fan motor run in middle or high speed, $T_{eva} \leqslant 49$℃, $T_{in} \leqslant 23$℃, and $T_{in} \leqslant T_{set}+1$℃, electrical heater work.

When indoor unit fan motor stop or run in low speed, either $T_{eva} \geqslant 57$℃, or $T_{in} \geqslant 26$℃,or $T_{in} \geqslant T_{set}+4$℃, electrical heater stop and restart till 2min later.

⑥ **The protecting functions:**

Protecting too high temperature of the compressor:

In heating mode, when $T_{eva} \geqslant 66$℃ for 8sec, the outdoor unit fan motor stop, LCD display “E3” in the location of T_{set}; when $T_{eva} \leqslant 56$℃, outdoor unit fan resume to run, the indoor unit fan motor run in the set speed and LCD resume too.

The conditions of avoiding cold wind:

In heating mode, either $T_{eva} \geqslant 28$℃ or the compressor running for over 10sec, the indoor unit fan motor run in the set speed.

The conditions of flowing hot wind:

Once the compressor stop, the indoor unit fan motor runs in low speed and will stop too in 30sec.

The conditions of beginning defrosting:

After the unit continue heating for 45min and if $T_{de} \leqslant -8$℃, the defrosting mode act, the reversal valve, the indoor and outdoor unit stop but the compressor.

If there is electrical heater in the unit, then it will be stop first and the reversal valve,

the indoor and outdoor unit stop in 1min.

The conditions of stopping defrosting:

After the unit continue defrosting for 10min or if $T_{de} \geqslant 10℃$, the defrosting stop, the reversal valve, the outdoor unit run, and the indoor unit fan motor will run in the condition of avoiding the cold wind.

The protection of overload current is same as cooling mode

The delay of compressor

The distance between 2 times running won't less than 3min once the compressor work and it will not stop by the changing of the temperature in the next 6min.

The compressor and the outdoor unit fan motor will stop for 3min when it is change from heating mode to cooling mode. The indoor unit fan motor run in the set speed the mode and avoiding the cold win and.

- **12,000Btu series mobile air-conditioner whit the mode cooling & heating**

  ①′ If $T_{in} \leqslant T_{set}+3℃$, heating mode act, reversing, compressor, outdoor unit fan motor and electrical heater run, indoor unit fan motor runs in the set speed ;

  ②′ If $T_{in}=T_{set}+4℃$, keep running in the old mode;

  ③′ If $T_{in} \geqslant T_{set}+5℃$, electrical heater stop and the indoor unit fan motor will stop in 15sec.

4) Fanning mode:

The indoor unit fan motor has 3 speeds which are high, middle and low, it will bot display the T_{set} and can not be changed.

9,000Btu series display the high, middle and low speed sign by the speed of indoor unit fan motor;

12,000Btu series display the fanning sign same as the indoor unit fan.

5) Auto functions:

The unit run depending on the T_{in}.

① **If** $T_{in} > 26℃$, cooling mode act, T_{in} is 26℃.

② **If** $26℃ \geqslant T_{in} \geqslant 20℃$, drying mode act, indoor unit fan motor run in low speed, compressor and outdoor unit fan motor run continually.

③ **If** $T_{in} < 20℃$, the different unit run different mode.

a) Air-conditioner with cooling & heating mode run heating mode, T_{set} is 20℃, if $T_{in} \geqslant 24℃$, stop heating.

Electrical heating run depending the conditions following:

If $T_{in} \leqslant T_{set}$, heating mode act, reversal valve, compressor and outdoor unit fan motor run together, indoor unit fan motor run in the set speed and avoiding the cold wind.

If $T_{set} < T_{in} < T_{set}+2℃$, the unit run in old mode.

If $T_{in} \geqslant T_{set}+2℃$, compressor, outdoor unit fan motor stop together, reversal valve is electrical, indoor unit fan motor run in the mode of flowing the hot wind.

If indoor unit fan motor run in middle or high speed, $T_{eva} \leqslant 49℃$, $T_{set} \leqslant 23℃$, and $T_{in} \leqslant T_{set}-2℃$, electrical heater act.

If either indoor unit fan motor stop or run in low speed, or $T_{eva} \geqslant 57℃$, or $T_{in} \geqslant 26℃$, or $T_{in} \geqslant T_{set}+1℃$, electrical heater stop and restart in 2min.

The protecting function of auto-heating mode is same as heating mode.

b) 12,000Btu series cooling only mobile air-conditioner and mobile split air-conditioner run the fanning mode, if $T_{in} \geqslant 24℃$, stop fanning.

c) 12,000Btu series cooling & heating mobile air-conditioner run the heating mode same as the heating mode, T_{set} is 20℃, if $T_{in} \geqslant 24℃$, heating mode stop.

④ **LCD**: It display the corresponding code of the running mode and the "AUTO" mark.

7. Others control:

1) Timer:

Set timer to "OFF" when the unit is working and set time to "ON" when the unit is stop, the range is 2~4h, the set time will decrease 0.5h once pressing the button "∨", and it will increase 0.5h once pressing the button "∧". The buttons have the function of canceling "set timer".

2) Sleep:

If it is cooling or drying, in 1hour of the beginning, the T_{set} will be increased 1℃, and it will be increased more 1℃ in the later 2hour, then the unit runs in this temperature.

If it is heating, in 1hour of the beginning, the T_{set} will be decreased 1℃, and it will be decreased more 1℃ in the later 2hour, then the unit runs in this temperature.

LCD display the "SLEEP" mark and for 12,000Btu series, it display the twinkle stars.

3) Choosing the models:

Models are decided by the state of the chi' feet.

21 foot is 12,000Btu(upwards)/9,000Btu(downwards)

22 foot is Celsius(upwards)/Fahrenheit(downwards)

20 foot is Cooling &heating(upwards)/cooling only(downwards)

19 foot is Mobile split(upwards)/Mobile(downwards)

4) LED of 12,000Btu series:

① The light of compressor running is green and it is light when the compressor is working;

② The light of protecting is red. It will twinkle when the water tank is full or there is a overload in compressor, the frequency of twinkling is 1Hz.

5) Controlling the sweep motor:

9,000Btu series' sweep motor is controlled by the button-sweeping, when the button is pressed once, sweep motor run and will stop when it is pressed again.

12,000Btu series' sweeping motor revolve 85° anticlockwise to open the air let at the beginning of the unit running and it revolve clockwise to close the air let when the unit is stop.

6) Testing functions:

Turn on the unit when the FAST is short circuit, LCD is light for 3sec, press the “mode” button, there is no delay protection for compressor and others functions are all same as the normal state.

Turn on the unit when the FAST is shorten, if the sensor is open or short circuit, LCD display the following mark in the location of T_{set}:

Sensor of indoor unit is open or short, display F0

Sensor of evaporator is open or short, display F1

Sensor of deforesting is open or short, display F2

7) It can be used in the range of AC220V±10%.
8) There is a short circuit protecting in the circuit.

8. Buttons on the control panel:

1) ON/OFF button;
2) MODE button;

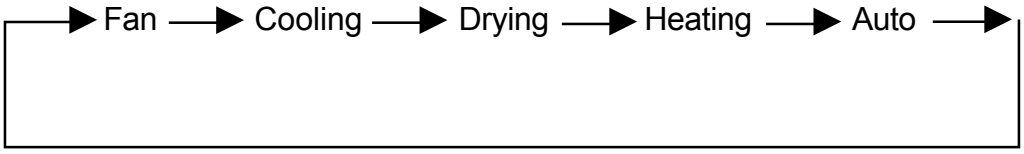

3) Fan speed button;

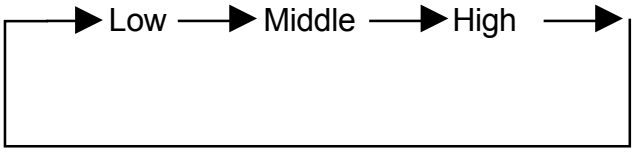

4) Timer button;
   The range of changing set time is 0.5~24h, the set time will be canceled when press “∨” when set time is 0.5h or press “∧” when set time is 24h.
5) Temperature button;
   The range of changing set temperature is 16℃~30℃.
6) Sleeping button:
7) Sweeping button (just for 9,000Btu series).

9. Design of remote control:

Y602(Chinese) and Y612A(English, Celsius)/Y612AF(English, Fahrenheit) are be used to control 12,000Btu series of mobile, mobile and split air-conditioner.

12.Mobile Air-conditioner (KY-32)

12.1 Summary.

figure 12-1

MODEL	NOTE
KY-32/K101	1Ph 220-230V~50Hz R407C
KYD-32/K101	1Ph 220-230V~50Hz R407C
GP12-22L	1Ph-220V~60Hz R22
GP12-12L	1Ph-115V~60Hz R22
GP12-12R	1Ph-115V~60Hz R22
KY-32U/11156	UL STANDARD 1Ph-115V~60Hz R22

12.2 Technical specifications.

Table 12-1

Item \ Model			KY-32/K101	KYD-32/K101	GP12-22L
Function			Cooling	Cooling/Heating	Cooling
Power source(PH-Hz-V)			1Ph 220-230V~50Hz		1Ph 220V~60Hz
Capacity	W		2500	2500/2000	3200
Power input	W		1100	1100/2050	1100
Current	A		5	5/9.0	5
Air volume	m^3/h		355		
Dehumidifying capacity	L/h		2.2		
C.O.P.			2.3	2.3	2.3
Upper fan speed	r/min		1100/1020/950		
Power output	W		40		
Fan capacitor μF			2		3
Upper fan type-pcs			Centrifugal fan--1		
Upper fan diameter length (mm-mm)			ϕ 174-85		
Evaporator			Tin fin copper type		
Rows-distance			2-1.6		
Working area			300 × 290mm		
Swing motor			MP28GA		
Power-speed (W-r/min)			8-4		
Control type			Manual/remote control		
Fuse A			3.15/0.2		
Working capacitor μF			0.01		
Condenser			Tin fin copper type		
Rows-fin distance			2-1.6		
Working area			500 × 305		
Compressor	W		Sealed rotated type		
Model			C-RN80H5C		2P14S236A1K
Power			970		950
Protect device	A		MST20ALU-920		MRA99027
Start method			P.C.S		
Current			4.9		4.8
Working temp.	r/min		Discharge temp.⩽ 115℃		
Compressor capacitor	μF		25		30
Lower fan speed			760		
Power output			35		
Working capacitor			2		3
Lower fan type-pcs			Centrifugal fan-1		
Lower fan diameter-length (mm-mm)			ϕ 210-80		3
Throttling method			Capillary		
Noise dB(A)			52		
Dimensions	Width	mm	450		
	Depth	mm	370		
	Height	mm	856		
Net weight		Kg	45		
Refrigerant			R407C		R22
Refrigerant charge		Kg	0.63		0.56

The technical date are subject to change without notice .Please refer to the nameplate of the unit.

Table 12-2

Item \ Model			GP12-12L	GP12-12R	KY-32U/11156
Function			Cooling	Cooling/Heating	Cooling
Power source(PH-Hz-V)			1Ph 115V~60Hz		
Capacity	W		3200	3200/1000	3200
Power input	W		1200	1200/1050	1200
Current	A		10	10/9.2A	10
Air volume	m^3/h		355		
Dehumidifying capacity	L/h		2.2		
C.O.P.			2.1	2.1	2.1
Upper fan speed	r/min		1100/1020/950		
Power output	W		40		
Fan capacitor μF			3		
Upper fan type-pcs			Centrifugal fan--1		
Upper fan diameter length (mm-mm)			ϕ 174-85		
Evaporator			Tin fin copper type		
Rows-distance			2-1.6		
Working area			300 × 290mm		
Swing motor			MP28GA		
Power-speed (W-r/min)			8-4		
Control type			Mannal/remote control		
Fuse A			Controller 3.15 Transformer 0.2		
Working capacitor μF			0.01		
Condenser			Tin fin copper type		
Rows-fin distance			2-1.6		
Working area			500 × 305		
Compressor			Scaled rotatcd type		
Model			2P14S126BIP		
Power	W		1000		
Protect device			MRA98694		
Start method			P.C.S		
Current	A		9.2		
Working temp.			Discharge temp ⩽ 115℃		
Compressor capacitor	μF		40		
Lower fan speed	r/min		760		
Power output			35		
Working capacitor			3		
Lower fan type-pcs			Centrifugal fan-1		
Lower fan diameter-length (mm-mm)			ϕ 210-80		
Throttling method			Capillary		
Noise dB(A)			52		
Dimensions	Width	mm	450		
	Depth	mm	370		
	Height	mm	856		
Net weight		Kg	45		
Refrigerant			R22		
Refrigerant charge		Kg	0.62		

The technical date are subject to change without notice .Please refer to the nameplate of the unit.

12.3 Outlines and dimensions

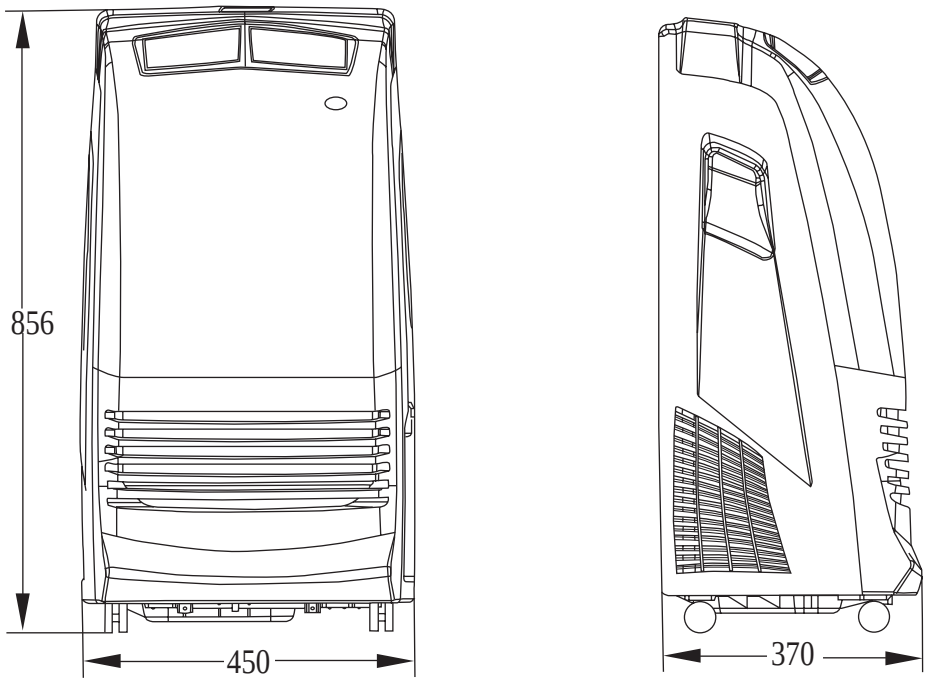

figure 12-2

12.4 Explosive view

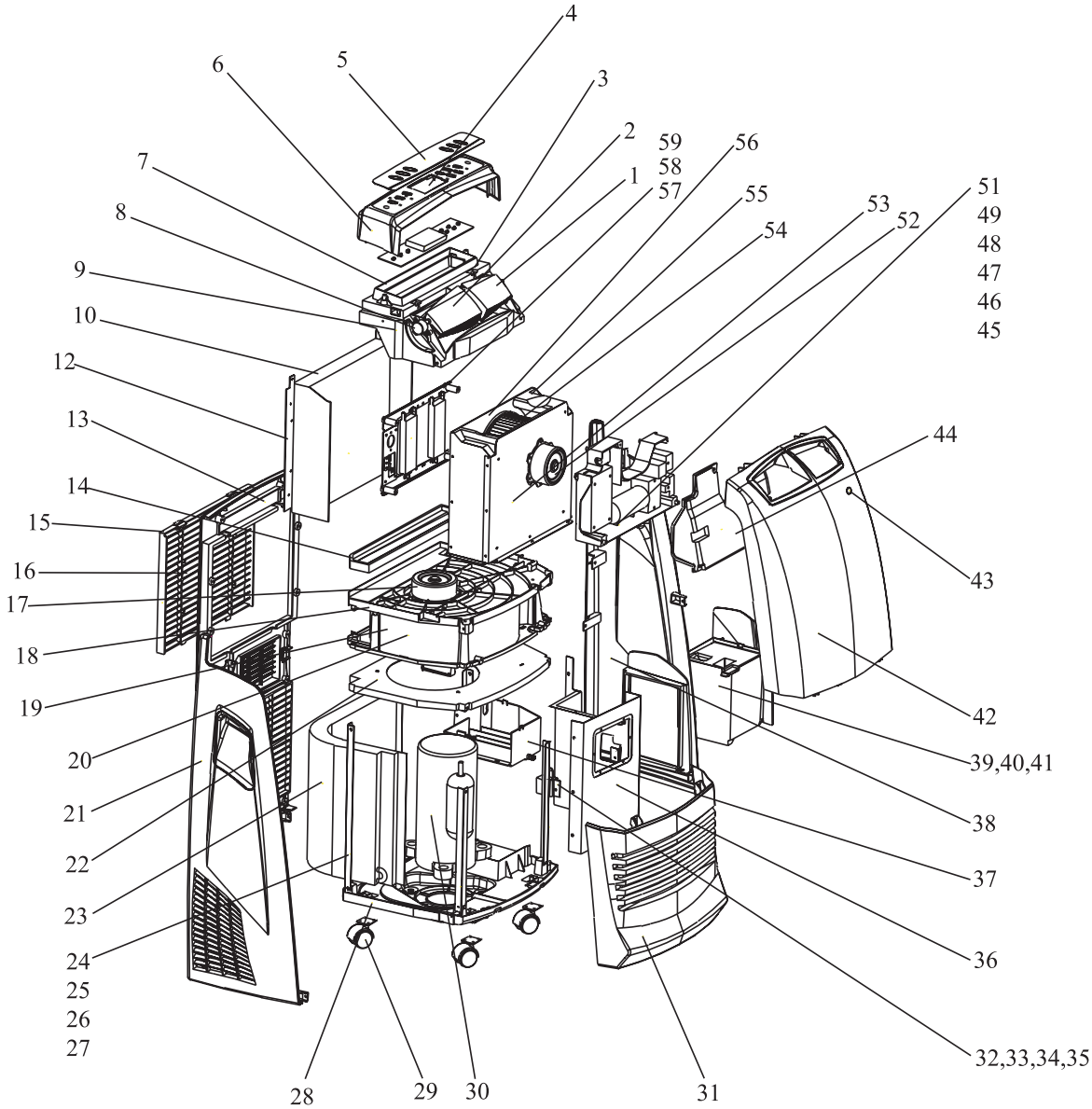

figure 12-3

12.5 Spare parts list

Table 12-3

No.	Description	名称及规格	Part No.						Qty
			KY-32/K101	KYD-32/K101	KY-32U/1115	GP12-12L	GP12-12R	GP12-22L	
1	air outlet grill 1	出风口格栅 1	22416030	22416030	22416033	22416030	22416030	22416030	1
2	air outlet grill 2	出风口格栅 2	22416031	22416031	22416034	22416031	22416031	22416031	1
3	screw cover	螺钉盖	24256001	24256001	24256001	24256001	24256001	24256001	2
4	LCD slide	显示器透明窗	22436201	22436201	22436201	22436201	22436201	22436201	1
5	membrane	面膜	60516084	60516081	60516084	60516084	60516081	60516084	1
6	LCD cover	控制盖板	20126030	20126030	20126030	20126030	20126030	20126030	1
7	LCD foam	控制器泡沫	12416052	12416052	12416052	12416052	12416052	12416052	1
8	swing motor	步进电机MP28GA	15212103	15212103	15212103	15212103	15212103	15212103	1
9	LCD backseat	控制器座板	26156030	26156030	26156030	26156030	26156030	26156030	1
10	evaporator assy	蒸发器组件	01006020	01006020	01006020	01006020	01006020	01006020	1
11	sensor support	感温头支架	24211121	24211121	24211121	24211121	24211121	24211121	1
12	rear plate	后板	20056053	20056053	20056053	20056053	20056053	20056053	1
13	evaporator tray	蒸发器接水盘组件	12416051	12416051	12416051	12416051	12416051	12416051	1
14	air inlet grill	蒸发器进风栅	22416032	22416032	22416032	22416032	22416032	22416032	1
15	filter	过滤网	11126051	11126051	11126051	11126051	11126051	11126051	1
16	Hooks	过滤网卡片	26116012	26116012	26116012	26116012	26116012	26116012	10
17	lower motor YD23B	下电机YD23B	15016021	15016021	\		\	\	1
	lower motor YD23H	下电机YD23H	\	\	15316001	15316001	15316001	\	1
	lower motor YD17A	下电机YD17A	\	\	\		\	15016024	1
18	middle insulation plate	中隔板	20056054	20056054	20056055	20056054	20056054	20056054	1
19	lower fan	下风叶	11516031	11516031	11516033	11516031	11516031	11516031	1
20	lower propeller house	下蜗壳	12316030	12316030	12106030	12316030	12316030	12316030	1
21	left side plate	左侧板	20056051	20056051	20056051	20056051	20056051	20056051	1
22	lower insulation plate	下隔板	01236020	01236020	01236020	01236020	01236020	01236020	1
23	condenser assy	冷凝器组件	01106020	01106020	01106020	01106020	01106020	01106020	1
24	support pole 1	支承条 1	02116020	02116020	02116020	02116020	02116020	02116020	1
25	support pole 2	支承条 2	02116021	02116021	02116021	02116021	02116021	02116021	1
26	support pole 3	支承条 3	02116022	02116022	02116022	02116022	02116022	02116022	1
27	support pole 4	支承条 4	02116023	02116023	02116023	02116023	02116023	02116023	1
28	base assy	底盘	22226030	22226030	22226031	22226030	22226030	22226030	1
29	castor	脚轮	24236051	24236051	24236051	24236051	24236051	24236051	4
30	compressor C-RN80H5C	压缩机及附件 C-RN80H5C	00120107	00120107	\	\	\	\	1
	compressor 2P14S126BIP	压缩机及附件 2P14S126BIP	\	\	00100002	00100003	00100002	\	1
	compressor 2P14S236A1K	压缩机及附件 2P14S236A1K	\	\	\	\	\	00100266	1
31	lower front panel	下面板	20006031	20006031	20006031	20006031	20006031	20006031	1
32	block 1	挡块一	26216505	26216505	26216505	26216505	26216505	26216505	1
33	block 2	挡块二	26216506	26216506	26216506	26216506	26216506	26216506	1
34	switch piece	开关	45016501	45016501	45016501	45016501	45016501	45016501	1
35	level switch	抽湿机水位开关	45020151	45020151	45020151	45020151	45020151	45020151	1
36	bottom insulation plate	底隔板组件	01236022	01236022	01236022	01236022	01236022	01236022	1
37	cindenser tray	冷凝器水槽部件	06126021	06126021	06126021	06126021	06126021	06126021	1
38	right side plate	右侧板	20056050	20056050	20056050	20056050	20056050	20056050	1
39	drain tank side plate	水箱侧板	20056052	20056052	20056052	20056052	20056052	20056052	1
40	drain tank	水箱组件	22246020	22246020	22246020	22246020	22246020	22246020	1
41	drain tank cover	水箱盖组件	22246022	22246022	22246022	22246022	22246022	22246022	1
42	upper front panel	上面板	20006030	20006030	20006033	20006030	20006030	20006030	1
43	remote control window	遥控红外窗	22436030	22436030	22436030	22436030	22436030	22436030	1

Table 12-4 continue

No.	Description	名称及规格	Part No.						Qty
			KY-32/K101	KYD-32/K101	KY-32U/1115	GP12-12L	GP12-12R	GP12-22L	
44	electric box cover	电器盒盖	20106031	20106031	20106033	20106031	20106031	20106031	1
45	electric box	电器盒	20106030	20106030	20106032	20106030	20106030	20106030	1
46	transformer SC24V1	电源变压器SC24V1	\	\	\	\	\	43110166	1
	transformer SC24(130℃)	电源变压器 SC24(130℃)	43110165	43110165	\	\	\	\	1
	transformer SC24V3/115℃	电源变压器 SC24V3/115℃	\	\	43110008	\	\	\	1
	transformer SC24B	电源变压器 SC24B	\	\	\	43110192	43110192	\	1
47	PCB 7863A	控制器 7863A	\	30026022	\	\	\	\	1
	PCB 7861CF （GR78B）	控制器7861CF(GR78B)	\	\	30026023	\	\	\	1
	PCB 7861C	7861C	\	\	\	30027026	\	\	\
	PCB 7863C	控制器 7863C	\	\	\		30027031	\	1
	PCB 7861A	控制器 7861A	30026021	\	\		\	30026021	1
48	terminal board	接线板 2-5	42011106	42011106	\	42011105	42011106	42011106	1
	terminal board	接线板（ＵＬ）	\	\	42011218	\	\	\	1
49	fan capacitor 2uF/450V	电容 2uF/450V	33010025	33010025	\		\	\	2
	fan capacitor 3uF/450V	电容 3uF/450V	\	\	33000010	33000010	33000010	33010021	2
50	compressor capacitor 30uF/450(440)V	电容 30uF/450(440)V	\	\	\	\	\	33000018	1
	compressor capacitor 25uF/450V	电容 25uF/450V (TUV.VDE)	33000020	33000020	\	\	\	\	1
	compressor capacitor 40uF/300V	电容 40uF/300V	\	\	33010724	33010724	33010724	\	1
51	magnet ring	磁环 I	49010104	49010104	49010104	49010104	49010104	49010104	1
52	upper motor YD40B	上电机 YD40B	15016022	15016022	\	\	\	\	1
	upper motor YD40H	上电机 YD40H	\	\	15316002	15316002	15316002	\	1
	upper motor YD12A	上电机 YD12A	\	\	\		\	15016023	1
53	motor backseat plate	电机座板	01336020	01336020	01336020	01336020	01336020	01336020	1
54	upper fan	上风叶	11516030	11516030	11516032	11516030	11516030	11516030	1
55	upper propeller house	泡沫蜗壳	12106051	12106051	12106051	12106051	12106051	12106051	1
56	Flow-guide loop	导流圈	10376020	10376020	10376020	10376020	10376020	10376020	1
57	PTC heater assy	PTC 部件	\	32006020	\	\	32006021	\	1
58	fuse	热熔断体 72	\	46010363	\	\	46010363	\	1
59	temperature limiter 250VAC15A55℃	限温器 250VAC15A55℃	\	46010509	\	\	46010509	\	1
60	tube sensor	6601 内管温包	39000104	39000104	39000104	39000104	39000104	39000104	1
61	room sensor	6601 内室温包	39000106	39000106	39000106	39000106	39000106	39000106	1
62	remote control Y612A	遥控器 Y612A	30062604	30062604	\	30516001	30516001	30062604	1
	remote control Y612AF	遥控器 Y612AF	\	\	30062605	\	\	\	1

The data are subject to change without notice.

12.6 Installation guide.

1.Fix the square end of the exhaust duct to the exhaust terminal of the unit.
2.Put the other end(discharge) to the nearest window
Attention:
The length of the air exhaust must be between 500mm~2000mm.

When mounting,try to keep the air exhaust horizonal.

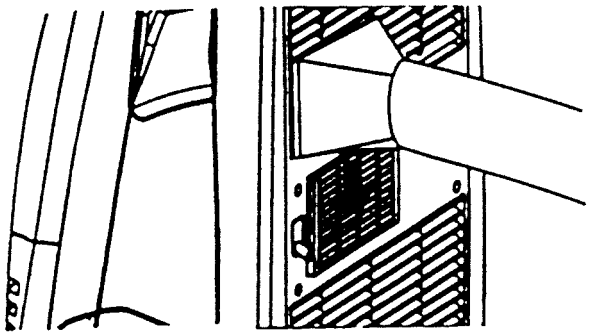

Correct mounting shown below (If mounting in the wall, the height of the hole should be 40cm~130cm)

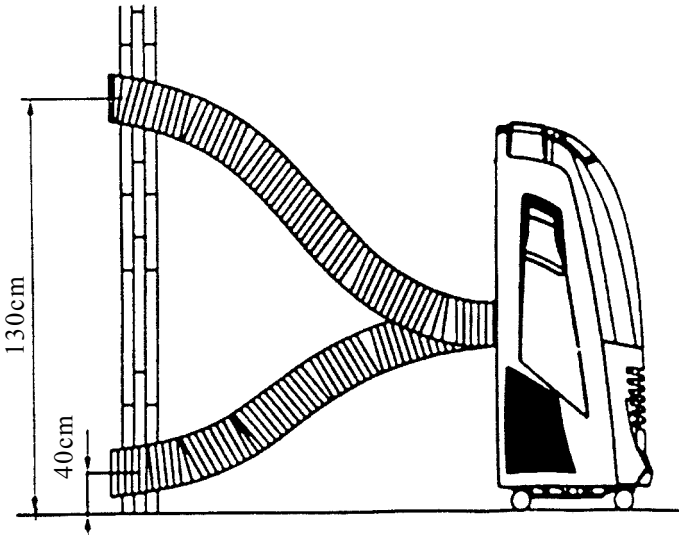

If the air exhaust requires bend, bend as shown as below.

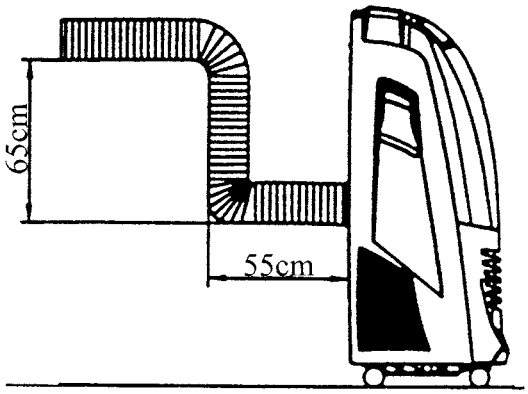

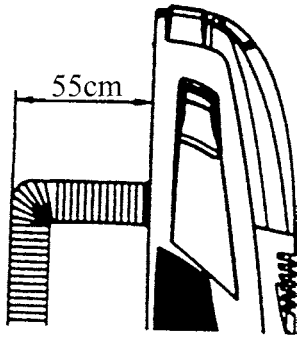

The wrong mounting diagram (Air exhaust bend too large, easily cause malfunction).

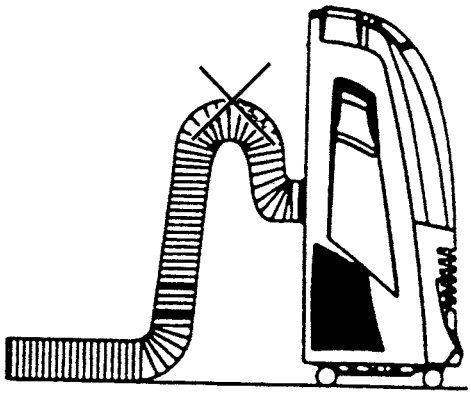

2.AIR FILTER

If the air filter is blocked with a lot of dust, the air flow volume will reduce. Clean the filter once every two weeks.

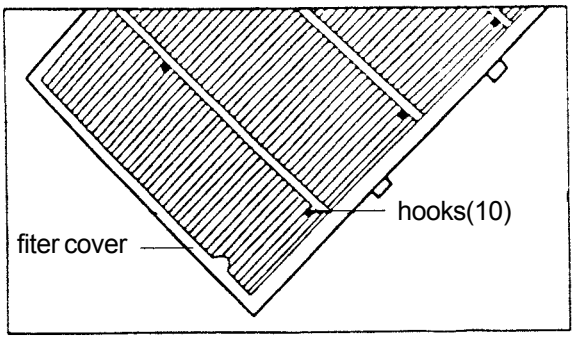

Open the air filter

Open the air filter cover, then take off the air filter, Take the air filter out of filter cover.

Clean

Wash the air filter by immersing it gently into warm (about 40℃) water with a neutral detergent, rinse the filter of detergent and dry it thoroughly in a shaded place.

Mounting

Attach the filter to the filter cover with the attachment hooks on the inside surface of the cover. Place the hooks at the bottom of the filter cover into the holes in the case, push it back into its orginal position.

WATER DRAINAGE

When in cooling or dehumidifrying mode, the dew water will drain into the tank, When the tank gets full, the indicator will flash, and the buzzer will sound eight times, LCD window shows error code “E4” at the same time the unit will switch off.

As the step shown in the figure below. Take out the water tank, pour out the water inside the tank, then push it back to its original position.

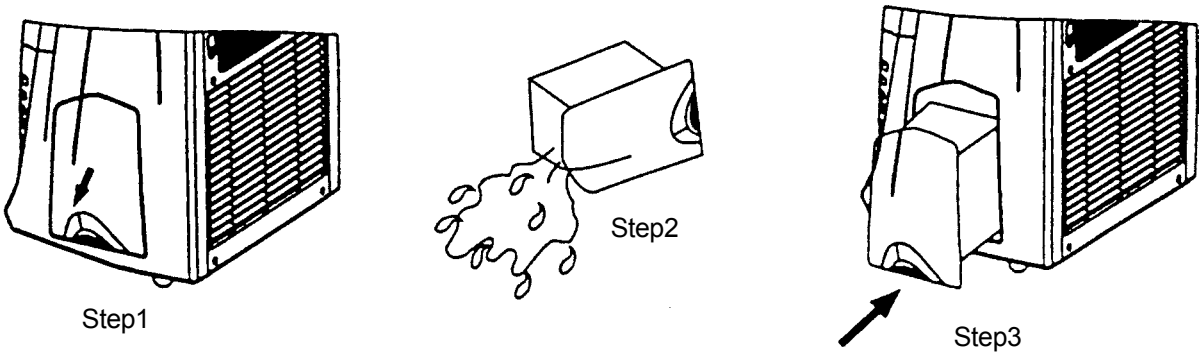

4.CAUTION

1. When in cooling or dehumidifying mode, do not take out the water tank, or the buzzer will sound and the unit will switch off.
2. If you want to take out the tank before it is full of water, please stop the machine first, and wait for 3 minutes to prevent the dew water from spilling into the unit.
3. There is a plastic pipe inside where the tank is placed. Do not remove the stopper while the unit is working because the water is used for cooling the copper tube.
4. Put in the plug of drainage in water drainage method.

5.METHOD OF CONTINUOUS DRAINAGE

1. Push down the drainage and make it inclined, pull out the plug of drainage.
2. Don’t push down the drainage except for this application, otherwise it will leak.
   Don’t make the continuous drainage clogged.
3. Hold the drainage, then insert the pipe into continuous drainage hole.
4. Drainage
   - When draining out water, don’t press the drainage too forcefully.
   - When draining out water, don’t make bend the pipe.

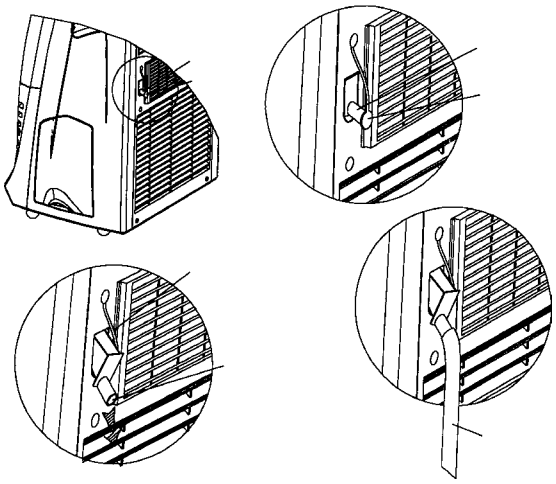

12.7 Circuit diagram

KY-32/K101 GP12-22L

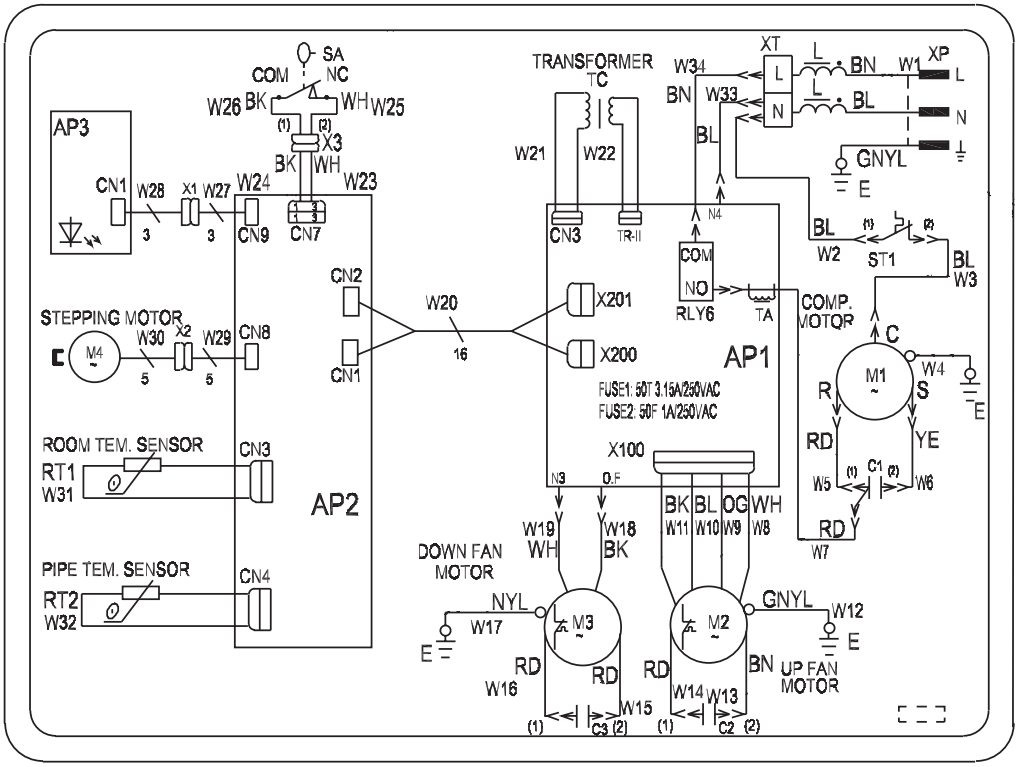

GP12-12L KY-32U/11156

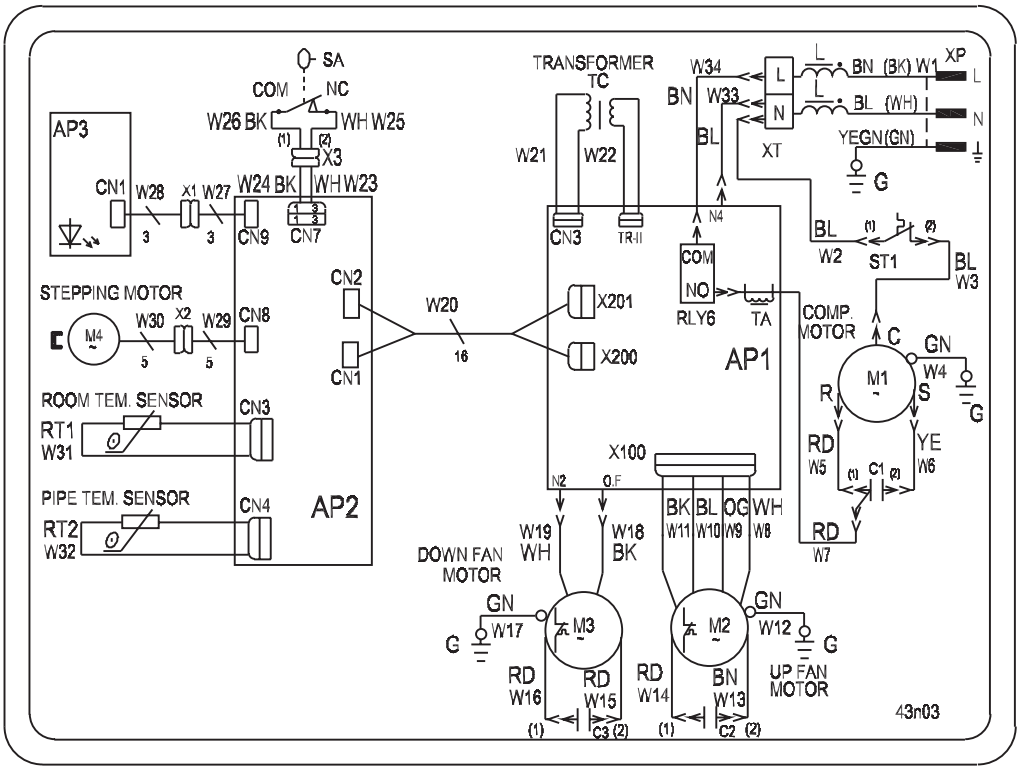

figure 12-4

GP12-12R KYD-32/K101

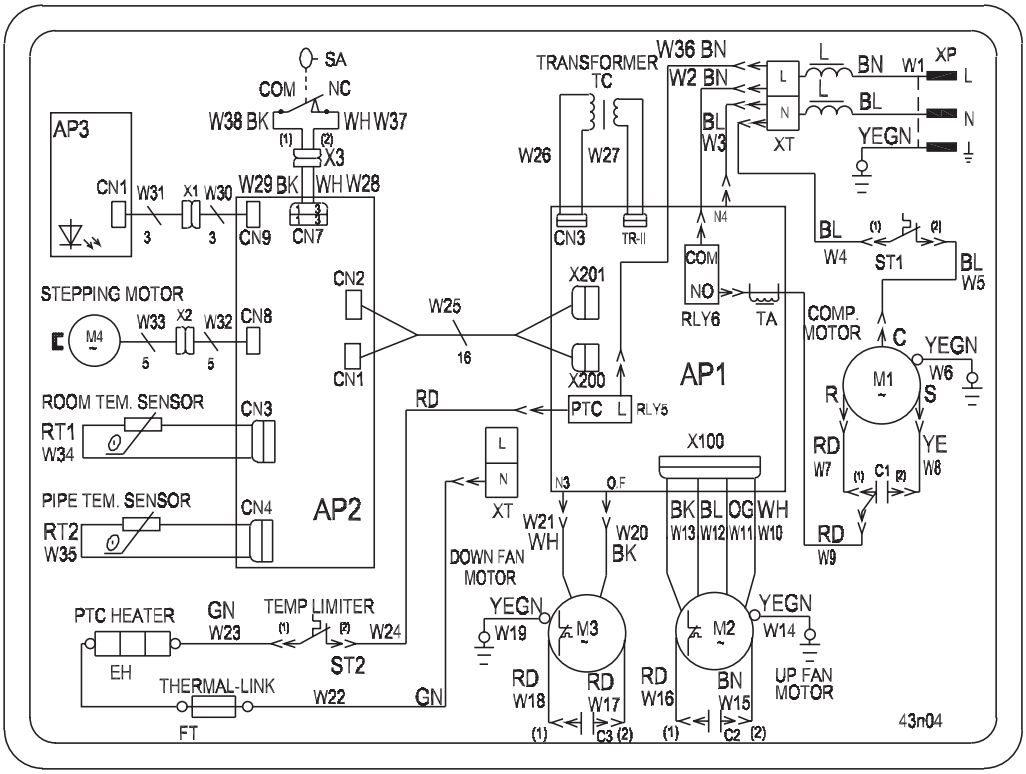

figure 12-5

12.8 PCB function manual

The 4 In 1 PCB function manual of the Mobile

1. **Adequate models:**
   Mobile split Air-conditioner about 7,000Btu;
   Mobile Air-conditioner about 7,000Btu;
   Mobile split Air-conditioner about 9,000Btu;
   Mobile Air-conditioner about 9,000Btu.
2. **Running mode:**
   1) FAN; 2) COOL; 3) DRY; 4) HEAT; 5) AUTO.
3. **Controlling modes:**
   1) Control panel; 2) Remote control.
4. **The parameter to be input:**
   1) **Analog quantity:** the ambient temperature of the indoor unit (shorten form is T_{in})
      the temperature of deforesting (shorten form is T_{de})
      the evaporator temperature of the indoor unit (shorten form is T_{eva})
      the current of the compressor (shorten form is I_{co})
   2) **Switch quantity:** the switch of the higher water level
      the switch of the lower water level
   3) **Controlled Input:** by the controlling panel;
      by the remote control.
5. **The parameter to be output:**
   1) **Output quantity of transformer:** Indoor fan motor(3-speed)
      Outdoor fan motor
      Compressor
      Reversing valve
      Indoor & outdoor water pump
      Sweeping fan motor
      Electrical heater
   2) **Output quantity of LED:** the light of the running compressor (LED1 green)
      The light of the buzzer (LED2 red)
   3) **Others:** LCD
      Buzzer
6. **The basal control modes:**
   1) **Cooling mode:**
      If $T_{in} \geqslant T_{set}$, cooling mode act, compressor and outdoor unit run, and indoor unit run in the set speed;
      If $T_{in} \leqslant T_{set}-1$℃, the unit will be stop from cooling mode, compressor and outdoor unit stop,

and indoor unit still run in the set speed;

If T_{set}-1℃＜T_{in}＜T_{set}, keep running in the old mode;

In the cooling mode, the range of T_{set} is 16℃~30℃, the initialize is 25℃

LCD: 9,000Btu series display "cooling", " the set fan speed", "T_{set}"

12,000Btu series display dynamic "the falling snow", "the fan revolving in the set speed", "the set fan speed", and "T_{set}"

The protecting functions:

① **Avoiding freezing:**

Once the compressor works for 10min, when T_{eva} ≤ -6℃ for over 8sec, the compressor and the outdoor unit fan motor stop, the indoor unit fan motor run in the set speed. After the compressor stops for 3min and T_{eva}≥8℃, everything runs in the old speed.)

② **Water pump control and the protection for the full water:**

The indoor unit water pump will work when the lower water switch is close till the lower water switch open for 2min.

The outdoor unit water pump will work after the indoor unit water pump works for 1min at the 1st time, the outdoor unit water pump will stop when the compressor stop and it will linkage with compressor in future.

When the higher water switch is close, the buzzer will alarm "click, click" 8 times, LCD display the wrong code "E4" in the location of "setting temperature" (for the 9, 000Btu series, LED2 flash), it means the indoor unit water pump does not work and the unit stop till the protection is canceled.

There is no water pump in the mobile air-conditioner, 1K resistance is used to short the lower water pump. The higher water pump is close when the water tank is full, the buzzer alarm "click, click" 8 times LCD display the wrong code "E4" in the location of "setting temperature" (for the 9,000Btu series, LED2 flash), it means the indoor unit water pump does not work and the unit stop till the protection is canceled.

The indoor unit and outdoor unit water pumps do not work in the mode of fanning and heating.

③ **Protecting the compressor:**

The distance between 2 times running won't less than 3min once the compressor work and it will not stop by the changing of the temperature in the next 6min. The compressor and the outdoor unit fan motor will stop when it is change from heating mode to cooling mode.

④ **The protection of overload current (low voltage protection):**

When the I_{co}≥13A for 3sec, the unit fan only (for 9,000Btu series, LED2 flash), LCD display the wrong code E1, it means the I_{co} is exceed the set current, compressor stop till the fault is canceled in 3min.

2) Drying mode:

The indoor unit fan motor runs in the low speed, compressor and outdoor unit fan motor run continually, the T_{set} will not be displayed and changed.

For 9,000Btu series, it will be displayed the “drying” sign and “low speed”, for 12,000Btu series, it will be displayed the picture of “water dripping” dynamic, the fan runs slowly.

The protection functions are same as the cooling mode, for 12,000Btu series, it will be displayed the picture of “water is overflow” dynamic when the water tank is full.

3) Heating mode:

- **Mobile split air-conditioner (cooling & heating)**

① If $T_{in} \leqslant T_{set}+3$℃, heating mode act, reversing, compressor and outdoor unit fan motor run, indoor unit fan motor runs in the set speed and the condition of avoiding the cold wind;

② If $T_{in}=T_{set}+4$℃, keep running in the old mode;

③ If $T_{in} \geqslant T_{set}+5$℃, compressor and outdoor unit fan motor stop, reserving valve is still electric ,the indoor unit fan motor runs in the set speed and flow the rest heat;

In the heating mode, the 4-way valve will be electroless in 2min after the unit is turned off.

④ **LCD**: 9,000Btu series display the sign of heating, indoor unit fan motor speed and T_{set}. 12,000Btu series display the sun light radiate outside dynamic, the fan runs in the set speed and T_{set}.

⑤ **Electrical heater:**

When the indoor unit fan motor run in middle or high speed, $T_{eva} \leqslant 49$℃, $T_{in} \leqslant 23$℃, and $T_{in} \leqslant T_{set}+1$℃, electrical heater work.

When indoor unit fan motor stop or run in low speed, either $T_{eva} \geqslant 57$℃, or $T_{in} \geqslant 26$℃,or $T_{in} \geqslant T_{set}+4$℃, electrical heater stop and restart till 2min later.

⑥ **The protecting functions:**

Protecting too high temperature of the compressor:

In heating mode, when $T_{eva} \geqslant 66$℃ for 8sec, the outdoor unit fan motor stop, LCD display “E3” in the location of T_{set}; when $T_{eva} \leqslant 56$℃, outdoor unit fan resume to run, the indoor unit fan motor run in the set speed and LCD resume too.

The conditions of avoiding cold wind:

In heating mode, either $T_{eva} \geqslant 28$℃ or the compressor running for over 10sec, the indoor unit fan motor run in the set speed.

The conditions of flowing hot wind:

Once the compressor stop, the indoor unit fan motor runs in low speed and will stop too in 30sec.

The conditions of beginning defrosting:

After the unit continue heating for 45min and if $T_{de} \leqslant -8$℃, the defrosting mode act, the reversal valve, the indoor and outdoor unit stop but the compressor.

If there is electrical heater in the unit, then it will be stop first and the reversal valve,

the indoor and outdoor unit stop in 1min.

The conditions of stopping defrosting:

After the unit continue defrosting for 10min or if $T_{de} \geqslant 10℃$, the defrosting stop, the reversal valve, the outdoor unit run, and the indoor unit fan motor will run in the condition of avoiding the cold wind.

The protection of overload current is same as cooling mode

The delay of compressor

The distance between 2 times running won't less than 3min once the compressor work and it will not stop by the changing of the temperature in the next 6min.

The compressor and the outdoor unit fan motor will stop for 3min when it is change from heating mode to cooling mode. The indoor unit fan motor run in the set speed the mode and avoiding the cold win and.

- **12,000Btu series mobile air-conditioner whit the mode cooling & heating**

  ①′ If $T_{in} \leqslant T_{set}+3℃$, heating mode act, reversing, compressor, outdoor unit fan motor and electrical heater run, indoor unit fan motor runs in the set speed ;

  ②′ If $T_{in}=T_{set}+4℃$, keep running in the old mode;

  ③′ If $T_{in} \geqslant T_{set}+5℃$, electrical heater stop and the indoor unit fan motor will stop in 15sec.

4) Fanning mode:

The indoor unit fan motor has 3 speeds which are high, middle and low, it will bot display the T_{set} and can not be changed.

9,000Btu series display the high, middle and low speed sign by the speed of indoor unit fan motor;

12,000Btu series display the fanning sign same as the indoor unit fan.

5) Auto functions:

The unit run depending on the T_{in}.

① **If** $T_{in} > 26℃$, cooling mode act, T_{in} is 26℃.

② **If** $26℃ \geqslant T_{in} \geqslant 20℃$, drying mode act, indoor unit fan motor run in low speed, compressor and outdoor unit fan motor run continually.

③ **If** $T_{in} < 20℃$, the different unit run different mode.

a) Air-conditioner with cooling & heating mode run heating mode, T_{set} is 20℃, if $T_{in} \geqslant 24℃$, stop heating.

Electrical heating run depending the conditions following:

If $T_{in} \leqslant T_{set}$, heating mode act, reversal valve, compressor and outdoor unit fan motor run together, indoor unit fan motor run in the set speed and avoiding the cold wind.

If $T_{set} < T_{in} < T_{set}+2℃$, the unit run in old mode.

If $T_{in} \geqslant T_{set}+2℃$, compressor, outdoor unit fan motor stop together, reversal valve is electrical, indoor unit fan motor run in the mode of flowing the hot wind.

If indoor unit fan motor run in middle or high speed, $T_{eva} \leqslant 49℃$, $T_{set} \leqslant 23℃$, and $T_{in} \leqslant T_{set}-2℃$, electrical heater act.

If either indoor unit fan motor stop or run in low speed, or $T_{eva} \geqslant 57℃$, or $T_{in} \geqslant 26℃$, or $T_{in} \geqslant T_{set}+1℃$, electrical heater stop and restart in 2min.

The protecting function of auto-heating mode is same as heating mode.

b) 12,000Btu series cooling only mobile air-conditioner and mobile split air-conditioner run the fanning mode, if $T_{in} \geqslant 24℃$, stop fanning.

c) 12,000Btu series cooling & heating mobile air-conditioner run the heating mode same as the heating mode, T_{set} is 20℃, if $T_{in} \geqslant 24℃$, heating mode stop.

④ **LCD**: It display the corresponding code of the running mode and the "AUTO" mark.

7. Others control:

1) Timer:

Set timer to "OFF" when the unit is working and set time to "ON" when the unit is stop, the range is 2~4h, the set time will decrease 0.5h once pressing the button "∨", and it will increase 0.5h once pressing the button "∧". The buttons have the function of canceling "set timer".

2) Sleep:

If it is cooling or drying, in 1hour of the beginning, the T_{set} will be increased 1℃, and it will be increased more 1℃ in the later 2hour, then the unit runs in this temperature.

If it is heating, in 1hour of the beginning, the T_{set} will be decreased 1℃, and it will be decreased more 1℃ in the later 2hour, then the unit runs in this temperature.

LCD display the "SLEEP" mark and for 12,000Btu series, it display the twinkle stars.

3) Choosing the models:

Models are decided by the state of the chi' feet.

21 foot is 12,000Btu(upwards)/9,000Btu(downwards)

22 foot is Celsius(upwards)/Fahrenheit(downwards)

20 foot is Cooling &heating(upwards)/cooling only(downwards)

19 foot is Mobile split(upwards)/Mobile(downwards)

4) LED of 12,000Btu series:

① The light of compressor running is green and it is light when the compressor is working;

② The light of protecting is red. It will twinkle when the water tank is full or there is a overload in compressor, the frequency of twinkling is 1Hz.

5) Controlling the sweep motor:

9,000Btu series' sweep motor is controlled by the button-sweeping, when the button is pressed once, sweep motor run and will stop when it is pressed again.

12,000Btu series' sweeping motor revolve 85° anticlockwise to open the air let at the beginning of the unit running and it revolve clockwise to close the air let when the unit is stop.

6) Testing functions:

Turn on the unit when the FAST is short circuit, LCD is light for 3sec, press the “mode” button, there is no delay protection for compressor and others functions are all same as the normal state.

Turn on the unit when the FAST is shorten, if the sensor is open or short circuit, LCD display the following mark in the location of T_{set}:

Sensor of indoor unit is open or short, display F0

Sensor of evaporator is open or short, display F1

Sensor of deforesting is open or short, display F2

7) It can be used in the range of AC220V±10%.
8) There is a short circuit protecting in the circuit.

8. Buttons on the control panel:

1) ON/OFF button;
2) MODE button;

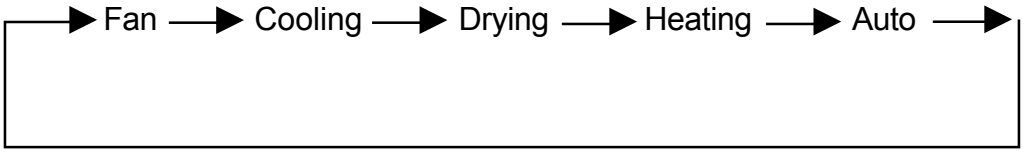

3) Fan speed button;

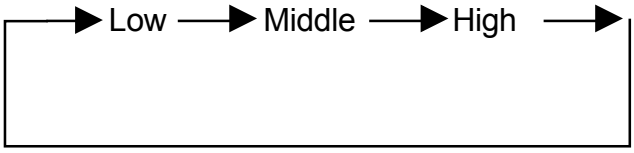

4) Timer button;
   The range of changing set time is 0.5~24h, the set time will be canceled when press “∨” when set time is 0.5h or press “∧” when set time is 24h.
5) Temperature button;
   The range of changing set temperature is 16℃~30℃.
6) Sleeping button:
7) Sweeping button (just for 9,000Btu series).

9. Design of remote control:

Y602(Chinese) and Y612A(English, Celsius)/Y612AF(English, Fahrenheit) are be used to control 12,000Btu series of mobile, mobile and split air-conditioner.

Annex1 Instruction manual of remote controller Y512

Brief introduction:this remote controller is a universal one, it can be used in many kinds of air conditioners,it features easy function,elegant profile, comfortable hand-held feeling, used in different A/Cs, etc.

Caution:

1.No obstacles between remote controller and receiver window.
2.The distance of remote signal receiving is about 10 meters.
3.Don’t drop remote controller or put down casually.
4.Don’t expose remote controller in liquid, direct sunshine, high temp.etc,

The outline dimensions of remote controller.

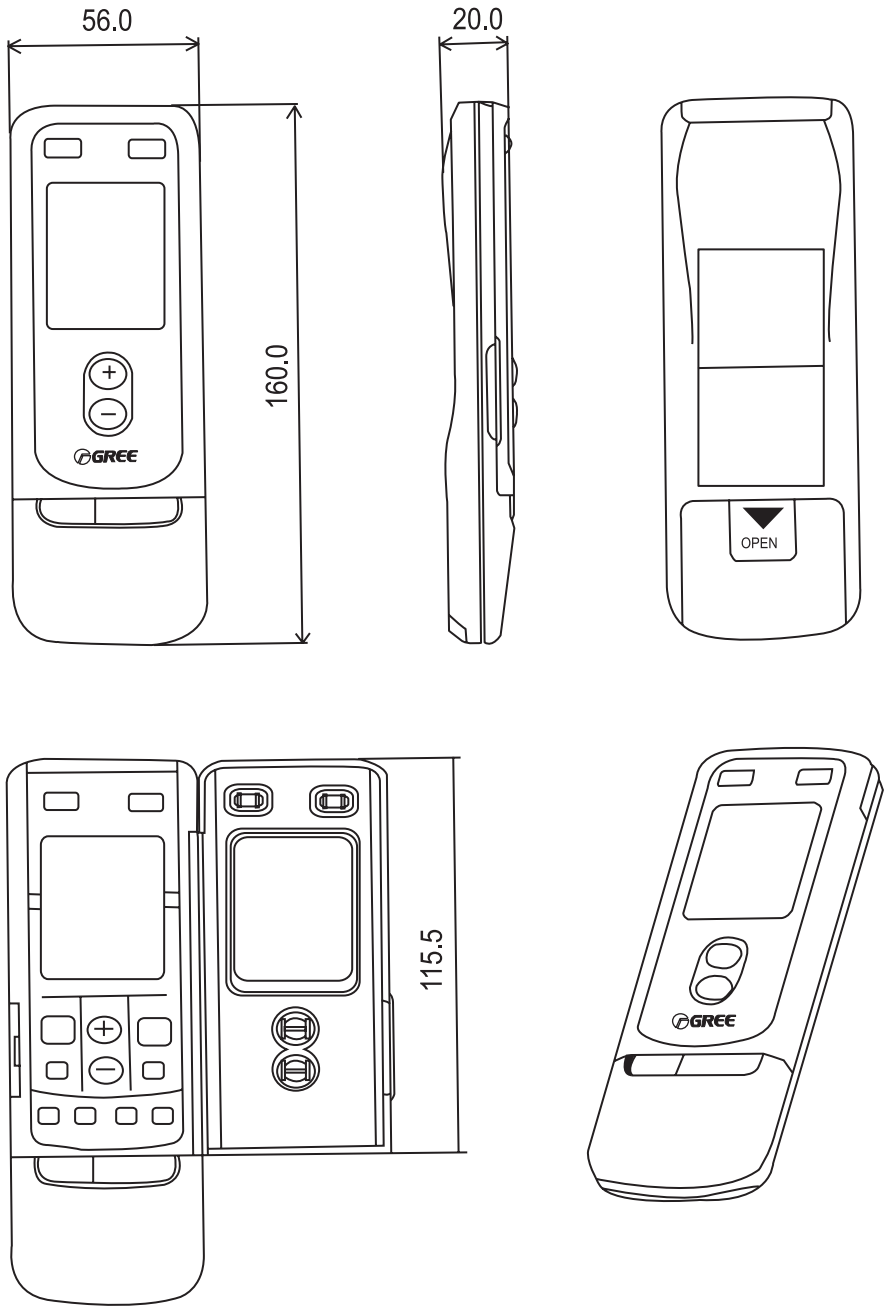

Usage of remote controller

Name and function of each button on remote controller.

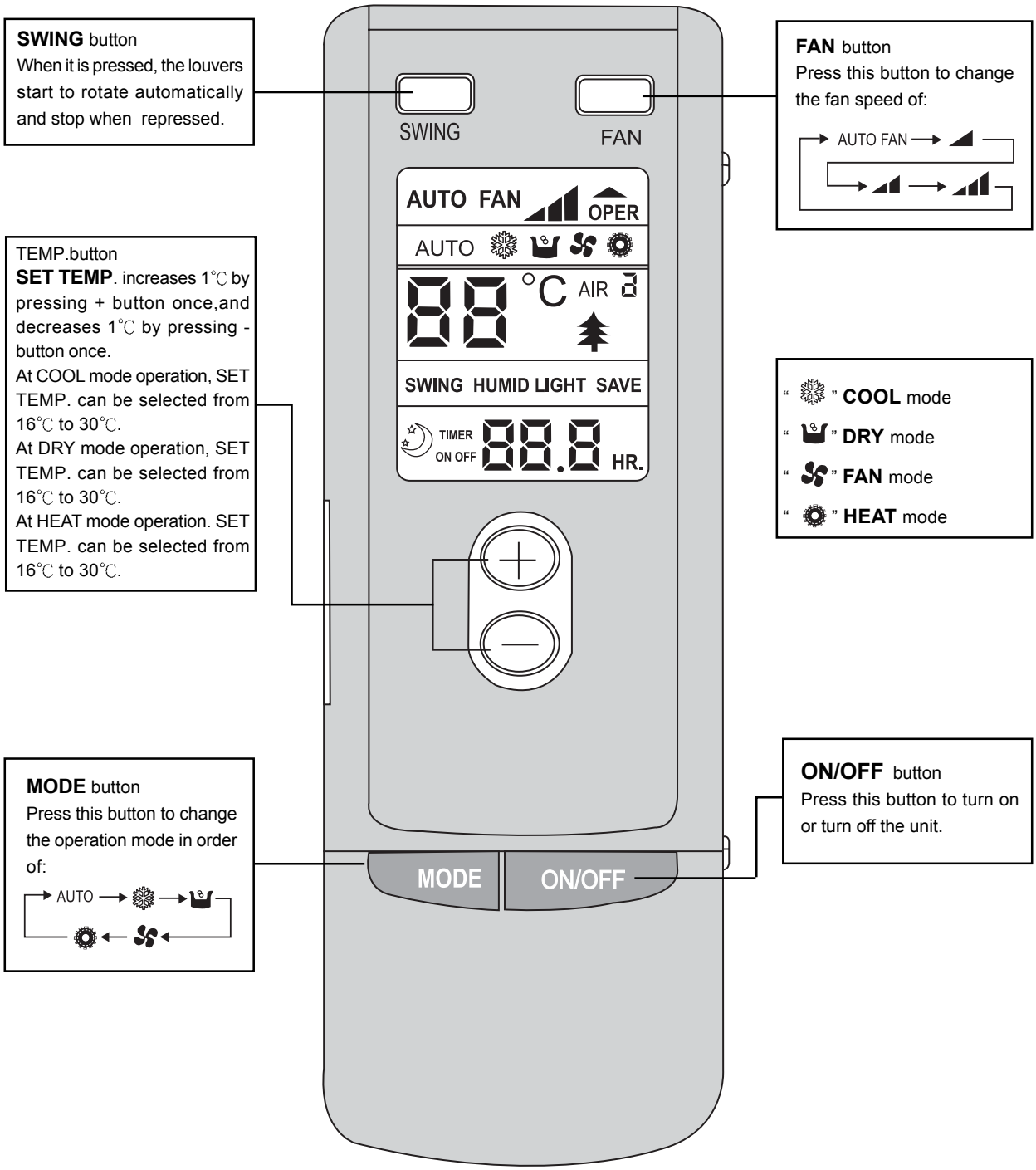

Name and Function-Remote control.(Remove the cover)

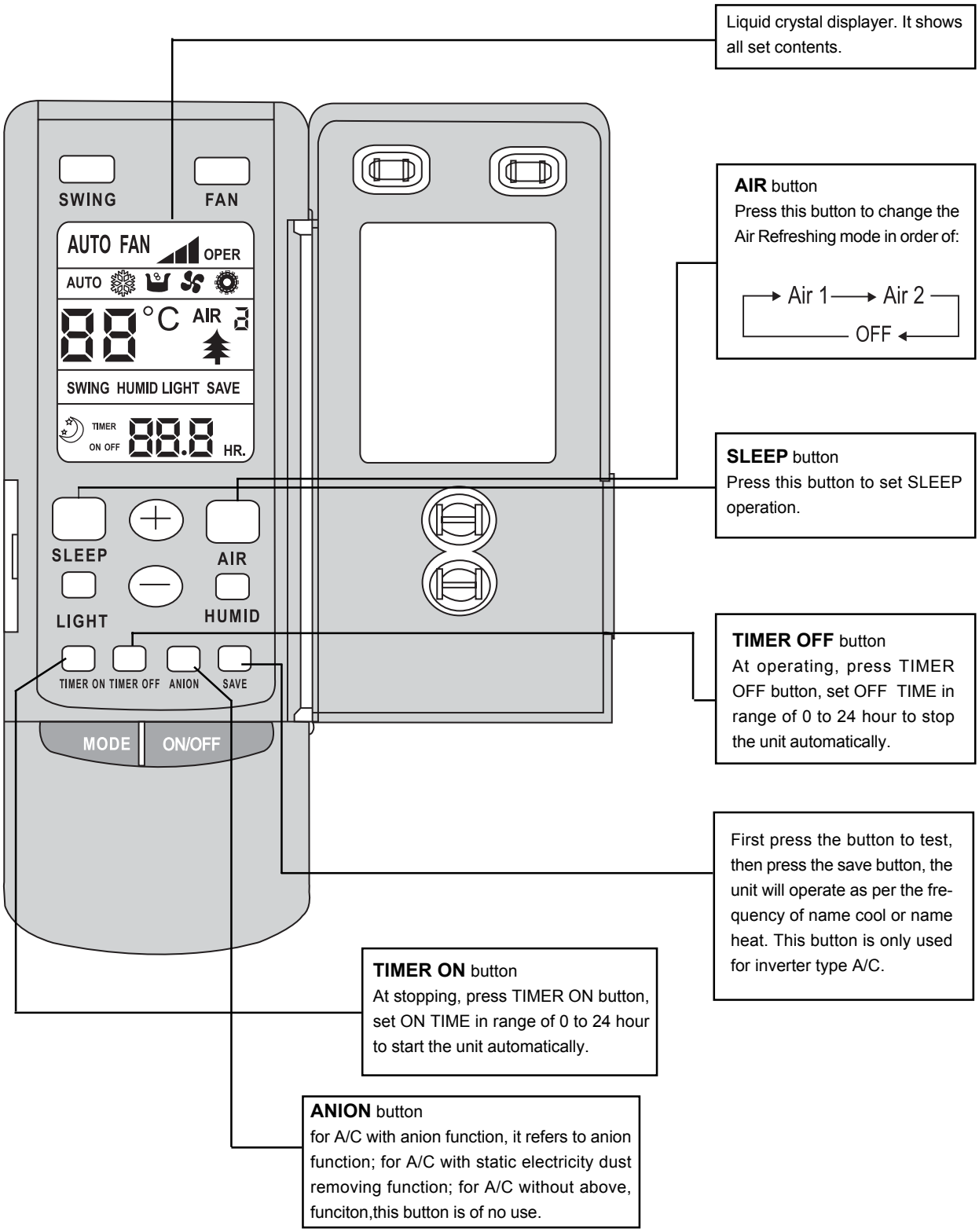

Cool mode opertion procedure

- According to difference between room temp. and set temp.,microcomputer can control cooling on or not.
- If room temp. is higher than set temp., compressor runs at COOL mode.
- If room temp. is lower than set temp., compressor stops and only indoor fan motor runs.
- SET TEMP.should be in range of 16℃ to 30℃.

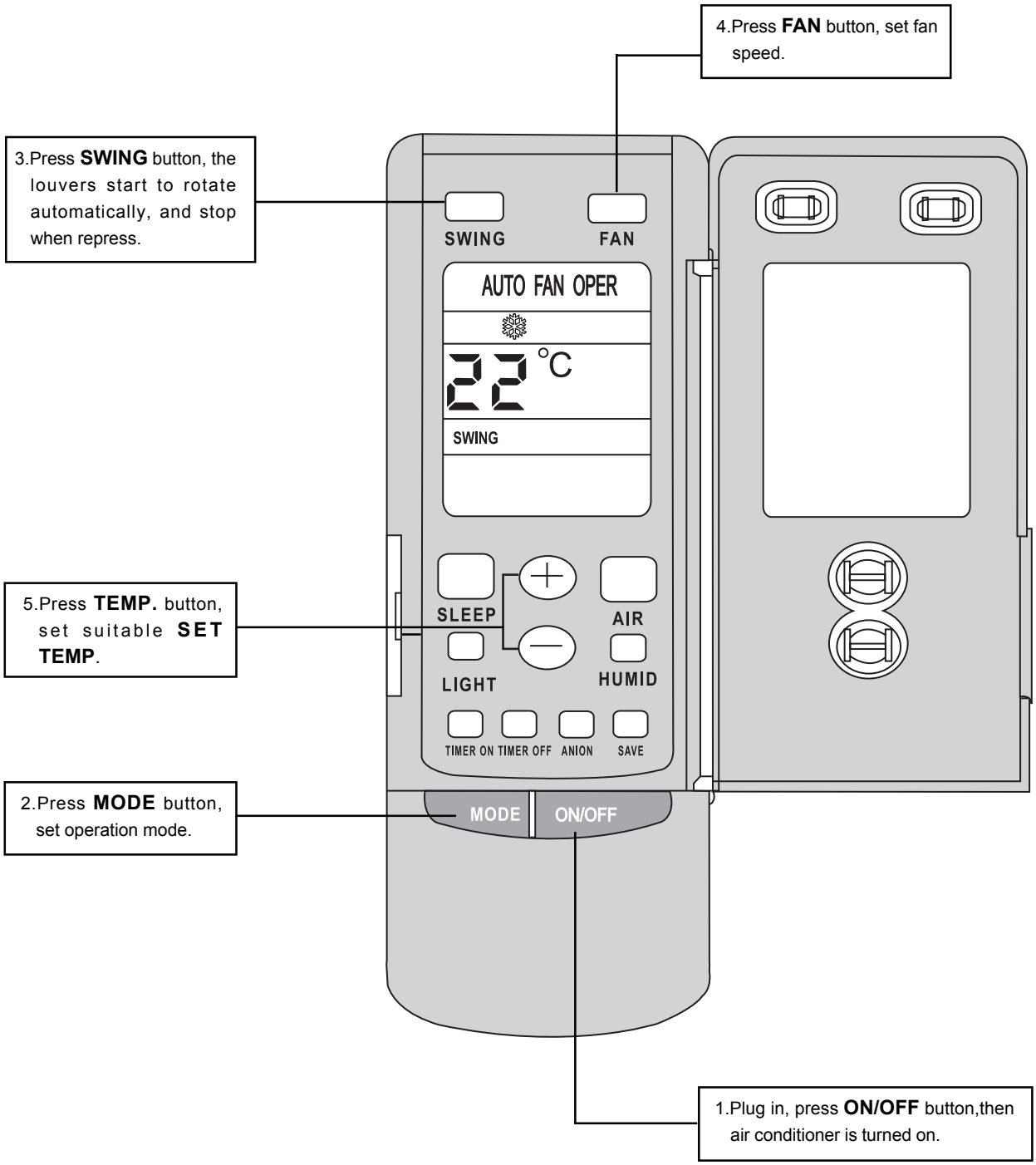

HEAT mode operation procedure

- **If room temp. is lower than set temp., compressor runs at HEAT mode;**
- **If room temp. is higher than set temp., compressor and outdoor fan mortor stop, only indoor fan mortor runs.**
- **SET TEMP. should be in range of 16℃ to 30℃.**

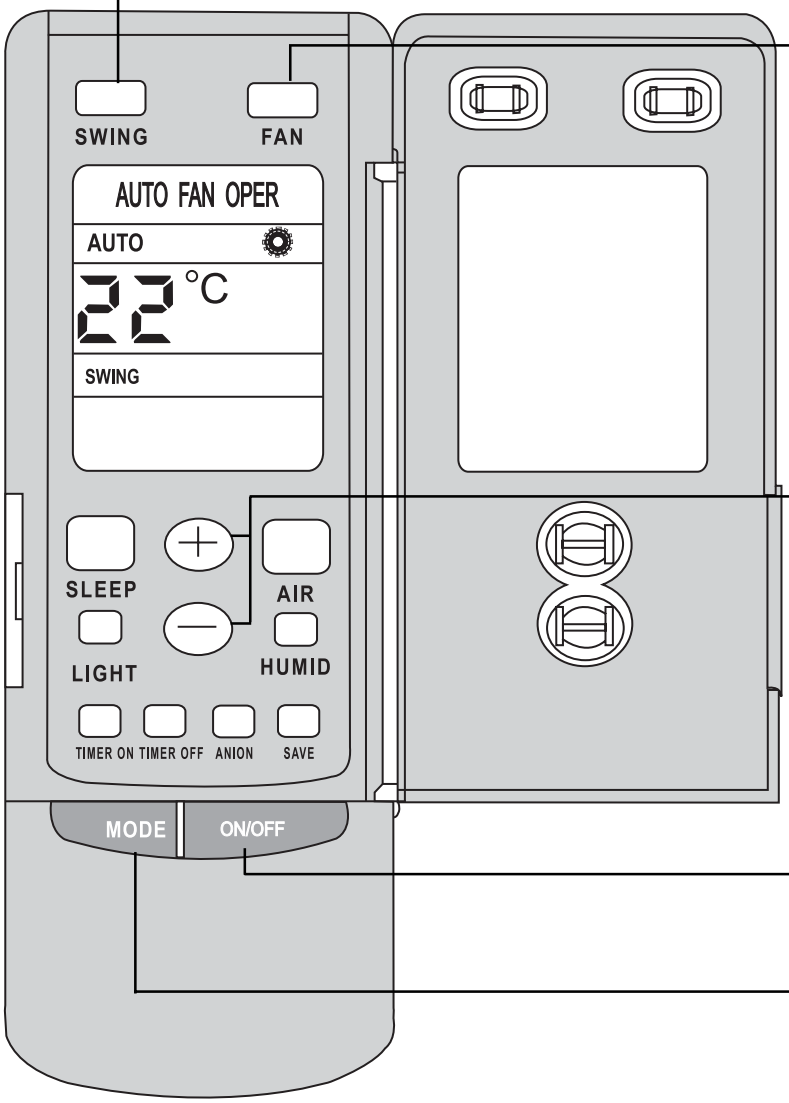

3.Press **SWING** button, the louvers start to rotate automatically, and stop when repress it.

4.Press **FAN** button, set fan speed.

5.Press **TEMP.** button, set suitable **SET TEMP.**

1.Plug in, press **ON/OFF** button,then air conditioner is turned on.

2.Press **MODE** button, set operation mode.

When the cool unit receive heating mode instruction, it operates under fan mode.

DRY mode operation procedure

- **If room temp. is lower than set temp., compressor, outdoor and indoor fan motor stop. If room temp. is between ±2℃ of set temp., air conditioner is drying.If room temp. is higher than set temp., it's at COOL mode.**
- **SET TEMP. should be in range of 16℃ to 30℃.**

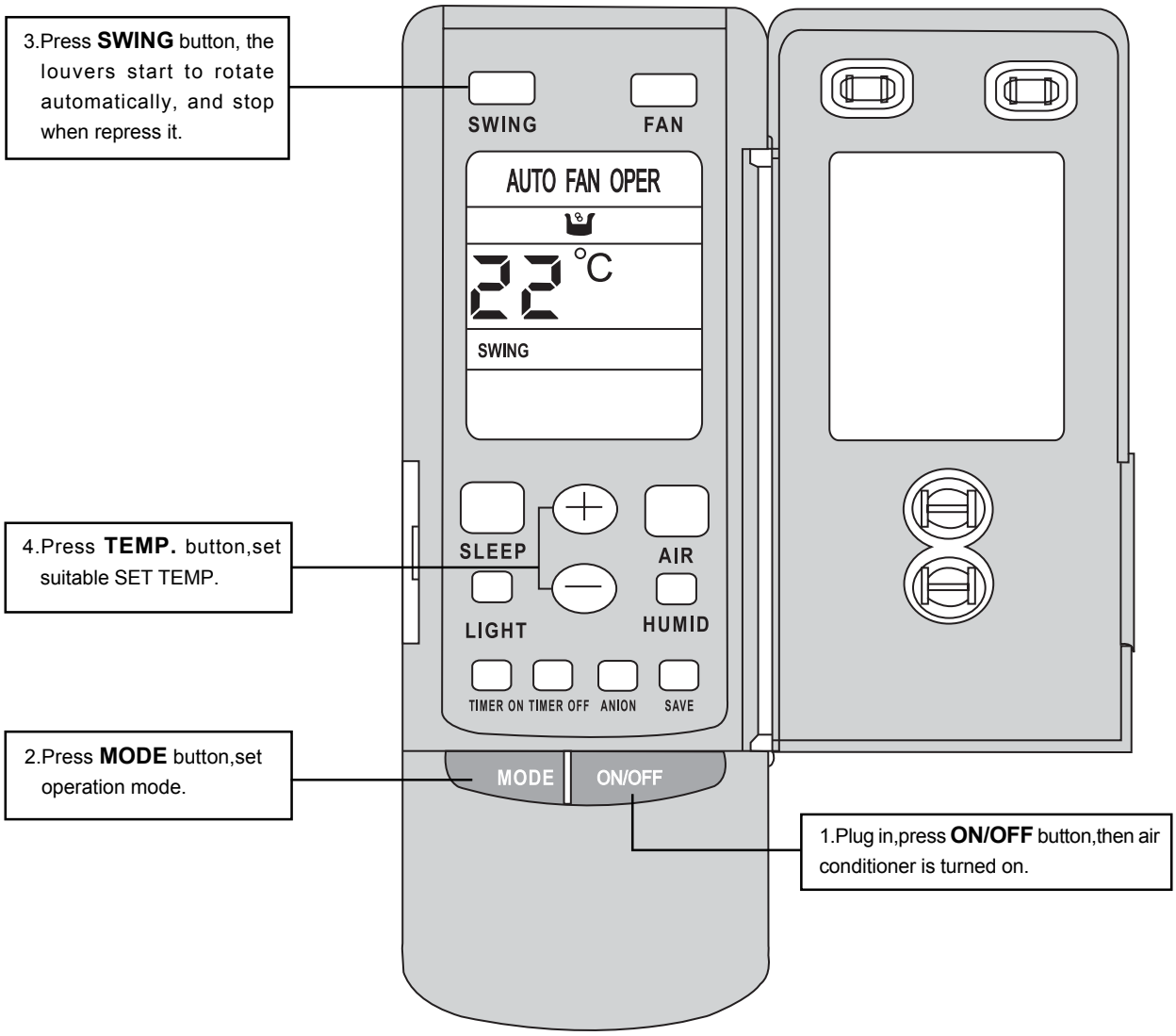

Fig7.11.4-5

AUTO mode operation procedure

- **At AUTO mode operation, standard SET TEMP. is 25℃ for COOL mode and 20℃ for HEAT mode.**

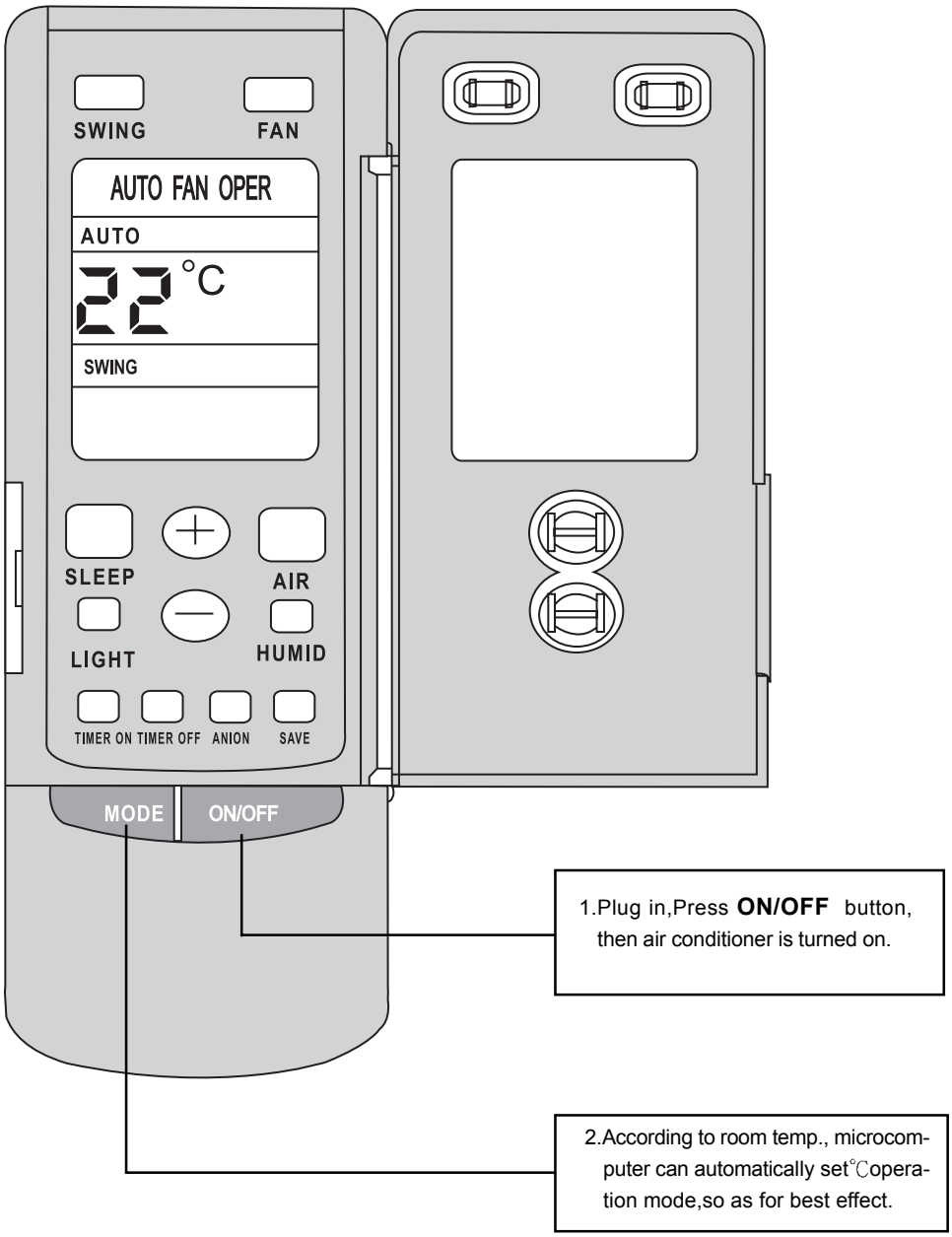

TIMER mode operation procedure

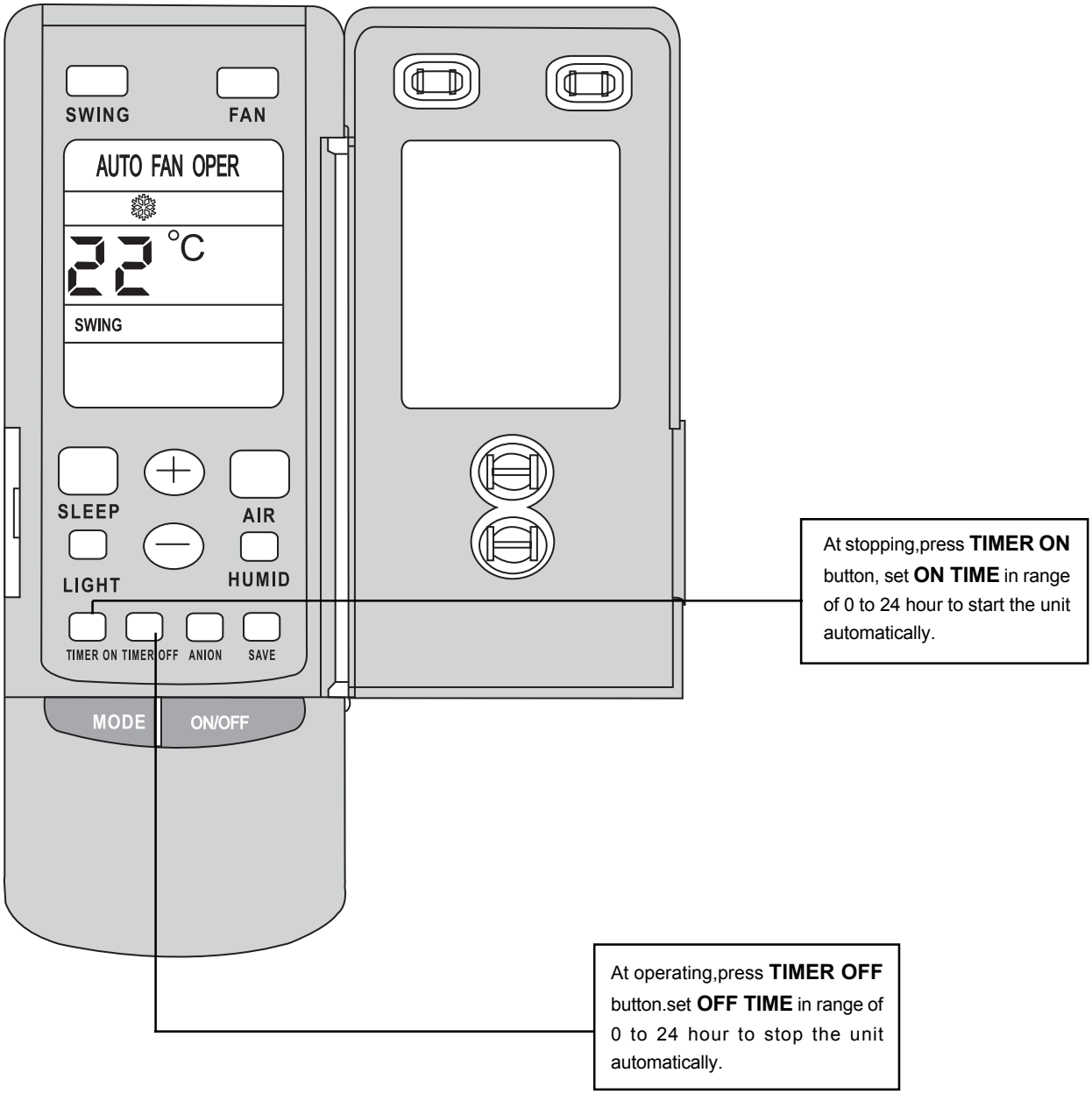

SLEEP mode operation procedure

- **When the unit is cooling or drying, if SLEEP operation is set, SET TEMP. would increase 1℃ in 1 hour and 2℃ in 2 hours. Indoor fan motor runs at low speed.**
- **When the unit is heating , if SLEEP operation is set,SET TEMP. would decrease 1℃, in 1 hour and 2℃ in 2 hours. Indoor fan motor runs at low speed.**

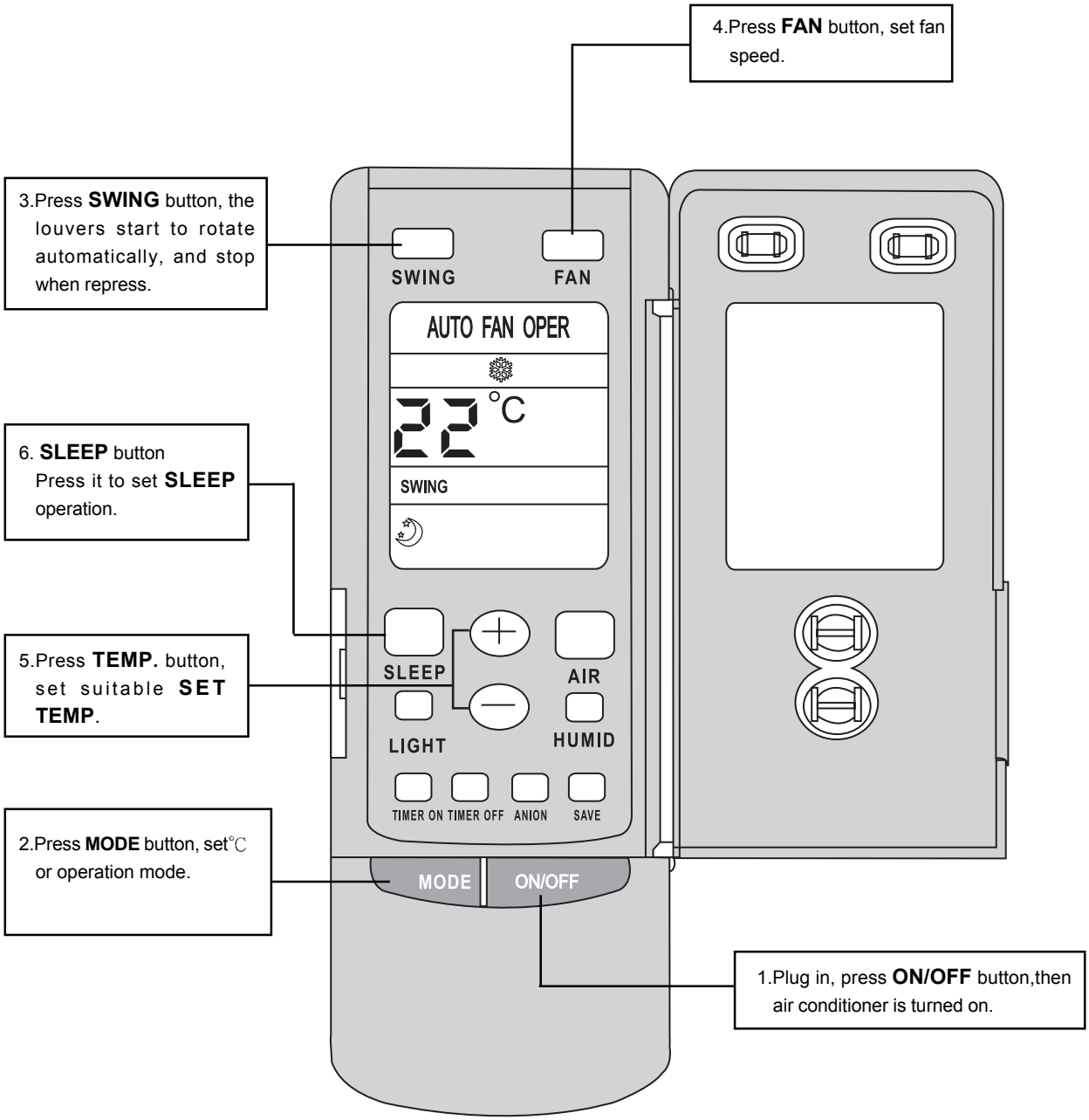

How to insert batteries

1. Remove the cover from the back of the remote control.
2. Insert the two batteries (Two AAA dry - cell batteries) and press button “ACL”.
3. Re - attach the cover.

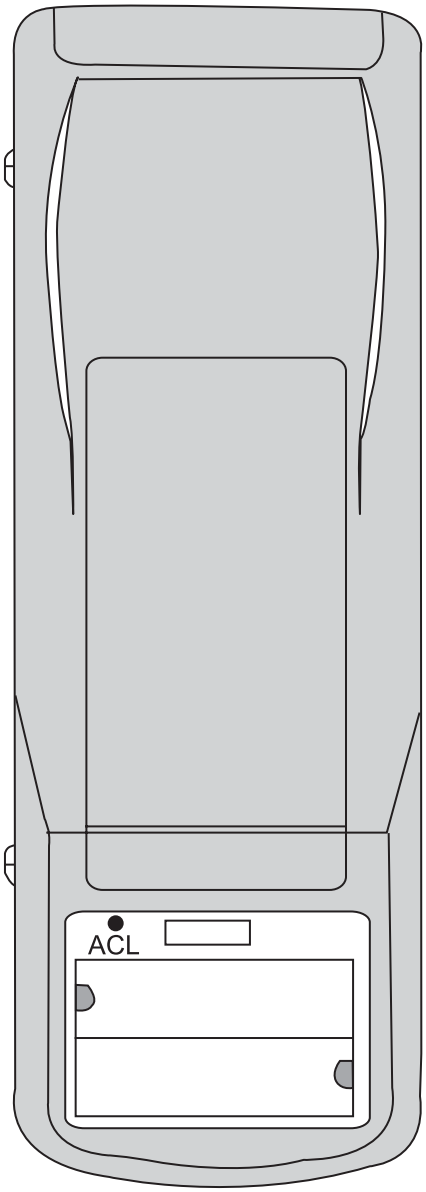

2.Insert the 7# batteries.

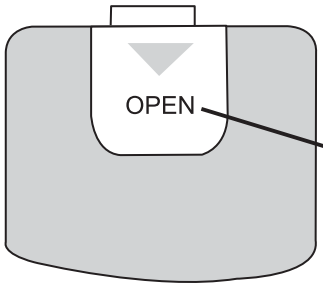

1. Remove the cover.
3. Re-attach the cover.

NOTE:

- **Don’t confuse the new and worn or different typers of batteries.**
- **Remove batteries when the remote controller is not in use for a longtime.**
- **The remote control signal can be received at the distance of up to about 10m.**
- **The lifetime of the batteries is about one yerar.**
- **The remote controller should be placed about 1m or more away from the TV. or any other electric appliances.**
- **Bad batteries are forbidden.**

Annex2 Non-ducted air conditioners and heat pumps-Testing and rating for performance (ISO5151)

1 Scope

1.1 This International Standard specifies the standard conditions on which the ratings of single-package and split-system non-ducted air conditioners employing air-and water-cooled condensers and heat pumps employing air-cooled condensers are based,and the test methods to be applied for determination of the various ratings.This International Standard is limited to systems utilizing a single refrigeration circuit and having one evaporator and one condenser.

Note 1 For the purposes of this International Standard,the term "equipment"will be used to mean "non-ducted air conditioners and/or non-ducted heat pumps".

1.2 This International Standard also specifies the test conditions and the corresponding test procedures for determining various performance characteristics of these non-ducted air conditioners and heat pumps.

1.3 It does not apply to the testing and rating of:

a) water-source heat pumps;

b)multiple split-system[1] air conditioners and heat pumps;

c)units designed for use with additional ducting;or

d)mobile (windowless) units having a condenser exhaust duct.

1.4 Clause 4 of this International Standard covers the rating and testing conditions for non-ducted air conditioners and heat pumps when used for cooling.

1) A unit having two or more indoor units connected to a single outdoor unit.

2) To be published. (Revision of ISO 817:1974)

1.5 Clause 5 of this International Standard covers the rating and testing conditions for non-ducted air conditioners and heat pumps when used for heating.The means for heating may be the heat pump refrigeration cycle or electrical resistance.

1.6 Annex A establishes testing procedures. Annex B describes the test facilities for the calorimeter method.Annex C provides formulae for the calculation of heating and cooling capacities. Annex D describes instruments which can be used in making measurements,and annex E describes methods for measuring air-flow.Annex F describes the outdoor air-enthalpy test method.Annex G gives a list of symbols used in the annexes.

2 Normative reference

The following standard contains provisions which,through reference in this text,constitute provisions of this International Standard.At the time of publication,the edition indicated was valid.All standards are subject to revision,and parties to agreements based on this International Standard are encouraged to investigate the possibility of applying the most recent edition of the standard indicated below.Members of IEC and ISO maintain registers of currently valid International Standards.

ISO 817:— [2],Refrigerants—Number designation.

3 Definitions

For the purposes of this International Standard,the following definitions apply.Annex G lists the symbols used to identify the terms contained in this International Standard.

3.1 mon-ducted air conditioner: An encased assembly or assemblies designed as a unit,primarily for mounting in a window,or through a wall,or as a console.it is designed primarily to provide free delivery of conditioned air to an enclosed space,room or zone (conditioned space).It includes a prime source of refrigeration for cooling and dehumidification and may also include means for heating other than a heat pump,and means for the circulation and the cleaning of air.It may also include means for heating, humidifying,ventilating or exhausting air.Where such equipment is provided in more than one assembly,the separated assemblies (split-systems) are to be designed to be used together,and the requirements of rating outlined in this Intermational Standard are based on the use of matched assemblies.

3.2 non-ducted heat pump: An encased assembly or assemblies designed as a unit,primarily for mounting in a window,or through a wall,or as a console.It is designed primarily to provide free delivery of conditioned air to an enclosed space,room or zone (conditioned space).It includes a prime source of refrigeration for heating which takes heat from a heat source.It may be constructed to remove heat from the conditioned space and discharge it to a heat sink if cooling and dehumidification are desired from the same equipment.It may also include means for the circulation and the cleaning of air,humidifying,ventilating or exhausting air.

3.3 standard air: Dry air at 20,0℃,and at a standard baro-

metric pressure of 101,325 kPa,having a mass density of 1, 204 kg/m^3.

NOTE 2 The definitions given in 3.4 to 3.13 relating to air-flow are illustrated in figure 1.

3.4 indoor discharge air-flow: Rate of flow of air from the indoor-side outlet of the equipment into the conditioned space.

3.5 indoor intake air-flow: Rate of flow of air into the equipment from the conditioned space.

3.6 ventilation air-flow: Rate of flow of air introduced to the conditioned space through the equipment from the outside.

3.7 outdoor discharge air-flow: Discharge rate of flow of air from the outdoor side of the equipment to the outdoors.

3.8 outdoor intake air-flow: Rate of flow of air into the equipment from the outdoor side.

3.9 exhaust air-flow: Rate of flow of flow of air from the indoor side through the equipment to the outdoor side.

3.10 leakage air-flow: Rate of flow of air interchanged between the indoor side and outdoor side through the equipment as a resuit of its construction features and sealing techniques.

3.11 bypassed indoor air-flow: Flow of conditioned air directly from the indoor-side outlet to the indoorside inlet of the equipment.

3.12 **bypassed outdoor air-flow**:Flow of air directly from the outdoor-side outlet to the outdoor-side inlet of the equipment.

3.13 equalizer opening air-flow: Rate of flow of air through the equalizer opening in the partition wall of a calorimeter.

3.14 total cooling capacity: Amount of sensible and latent heat that the equipment can remove from the conditioned space in a defined interval of time.

3.15 heating capacity: Amount of heat that the equipment can add to the conditioned space in a defined interval of time.

3.16 latent cooling capacity: room dehumidifying capacity: Amount of latent heat that the equipment can remove from the conditionde space in a defined interval of time.

3.17 sensible cooling capacity: Amount of sensible heat that the equipment can remove from the conditioned space in a defined interval of time.

3.18 sensible heat ratio: Ratio of the sensible cooling capacity to the total cooling capacity.

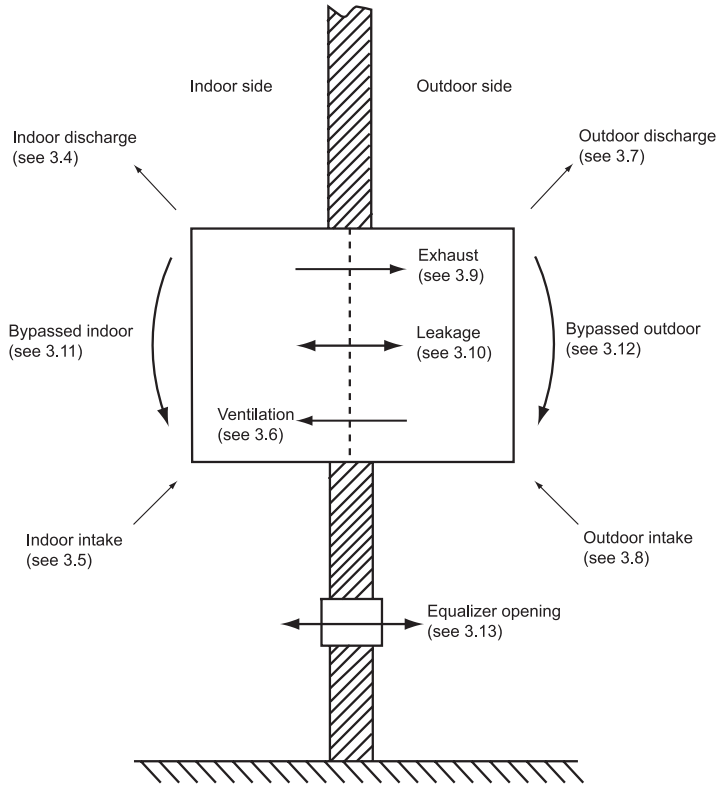

Figure 1 — Air flow diagram illustrating definitions given in 3.4 to 3.13

3.19 rated voltage(s): Voltage(s) shown on the nameplate of the equipment.

3.20 rated frequency(ies): Frequency(ies) shown on the nameplate of the equipment.

3.21 energy efficiency ratio (EER): Ratio of the total cooling capacity to the effective power input at any given set of rating conditions.(Where the EER is stated without an indication of units,it shall be understood that it is derived from watts/watt.)

3.22 coefficient of performance(COP): Ratio of the heating capacity to the effective power input of the device at any given set of rating conditions.

3.23 effective power input(PE): Average electrical power input to the equipment within a defined interval of time,obtained from:

---- the power input for operation of the compressor and any power input for defrosting,excluding additional electrical heating devices not used for defrosting;
---- the power input of all control and safety devices of the equipment;and
---- the power input of the conveying devices within the equipment for heat transport media (e.g.fan,pump).

3.24 total power input(P): Power input to all components of the equipment as delivered.

4 Cooling tests

4.1 Cooling capacity ratings

4.1.1 General conditions

All equipment within the scope of this International Standard shall have the coohng capacities and energy efficiency ratios determined in accordance with the provisions of this International Standard and rated at the cooling conditions specified in table 1.

4.1.2 Temperature conditions

4.1.2.1 Test conditions stated in table 1,columns T1,T2 and T3,shall be considered standard rating conditions.

Table 1-Test conditions for the determination of cooling capacity

Parameter	Standard test conditions		
	T1	T2	T3
Temperature of air entering indoor side(℃) dry-bulb wet-bulb	 27 19	 21 15	 29 19
Temperature of air entering outdoor side(℃) dry-bulb wet-bulb[1]	 35 24	 27 19	 46 24
Condenser water temperature[2]℃ inlet outlet	 30 35	 22 27	 30 35
Test frequency	Rated frequency[3]		
Test voltage	Rated voltage[4]		

T1=Standard cooling capacity rating conditions for moderate climates
T2=Standard cooling capacity rating conditions for cool climates
T3=Standard cooling capacity rating conditions for hot climates

1)The wet-bulb temperature condition is not required when testing air-cooled condensers which do not evaporate the condensate.
2)Representative of equipment working with cooling towers.For equipment designed for other uses,the manufacturer shall designate the condenser water inlet and outlet temperatures or the water flowrates and the inlet water temperature in the ratings.
3)Equipment with dual-rated frequencies shall be tested at each frequency.
4)The test voltage on dual-rated voltage equipment shall be performed at both voltages or at the lower of the two voltages if only a single rating is published.

4.1.2.2 Equipment manufactured for use in a moderate climate similar to that specified in table 1,column T1 only, shall have a nameplate rating determined by tests conducted at these specified conditions and shall be designated type T1 units.

4.1.2.3 Equipment manufactured for use in a cool climate similar to that specified in table 1, column T2 only,shall have a nameplate rating determined by tests conducted at these specified conditions and shall be designated type T2 units.

4.1.2.4 Eqipment manufactured for use in a hot climate similar to that specified in table 1, column T3 only,shall have a nameplate rating determined by tests conducted at these specified conditions and shall be designated type T3 units.

4.1.2.5 Equipment manufactured for use in more than one of the types of climate defined in table 1,columns T1,T2 and T3,shall have marked on the nameplate the designated type and rating determined by tests for each of the specified conditions for which they have been designated and tested.

4.1.3 Air-flow conditions

When determining air-flow quantities for rating purposes, tests shall be conducted at standad rating conditions (see table 1) with 0 Pa static maintained at the air discharge of the equipment and with the refrigeration means in operation and after condensate equilibrium has been obtained. All air quantities shall be expressed as metre cubed per second (m^3/s) of standard air as defined in 3.3.

4.1.4 Test conditions

4.1.4.1 Preconditions

a)When using the calorimeter method,two simultaneous methods of determining capacities shall be used.One method determines the capacity on the indoor side,the other measures the capacity on the outdoor side.These two simultaneous determinations shall agree within 4% of the value obtained on the indoor side for the test to be valid.in the case of non-ducted air conditioners with water-cooled condensers,the heat-flow rejected via the cooling water is measured instead of the measurement in the outdoor-side compartment.

b)The test capacity shall include the determination of the sensible,latent or total cooling capacity as determined in the indoor-side compartment.

c)Tests shall be conducted under the selected conditions with no changes made in fan speed or system resistance to correct for variations from the standard barometric pressure(see 3.3).

d)Grille positions,damper positions,fan speeds,etc.shall be set to result in maximum cooling capacity unless this is contrary to the manufacturer's instructions.When tests are made at other settings,these shall be noted together with the cooling capacity ratings.

e)Test conditions shall be maintained for not less than 1 h before recording data for the capacity test.

4.1.4.2 Duration of test

The test shall then be run for 30 min,recording data every 5 min,providing seven sets of readings.Variations allowed in capacity test readings shall be in accordance with table 12.

4.2 Maximum cooling test

4.2.1 General conditions

The conditions which shall be used during the maximum cooling test are given in table 2.

4.2.2 Temperature conditions

Tests shall be carried out under the conditions given in column T1,T2 or T3 of table 2,based on the intended use, as determined in 4.1.2.Equipment intended for use under more than one set of operating conditions shall have the highest relevant set of the intended operating conditions applied for test purposes.if maximum operating temperature conditions for cooling are specified in the manufacturer's equipment specification sheets,they shall be used in lieu of those in table 2.

4.2.3 Air-flow conditions.

The maximum cooling test shall be conducted with an indoor-side air volume flowrate as determined under 4.1.3.

4.2.4 Test conditions

4.2.4.1 Preconditions

The controls of the equipment shall be set for maximum cooling and all ventilating air dampers and exhaust air dampers shall be closed.The equipment shall be operated continuously for 1 h after the specified air temperatures and the equilibrium condensate level have been established.

4.2.4.2 Duration of test

All power to the equipment shall be cut off for 3 min and then restored for 1 h.

4.2.5 Performance requirements

4.2.5.1 During one emtire test,the equipment shall operate without any indication of damage.

4.2.5.2 The motors of the equipment shall operate continuously for the first hour of the test without tripping of the mo-

Table 2-Maximum cooling test conditions

Parameter	Standard test conditions		
	T1	T2	T3
Temperature of air entering indoor side(℃) dry-bulb wet-bulb	 32 23	 29 19	 32 23
Temperature of air entering outdoor side(℃) dry-bulb wet-bulb[1)]	 43 26	 35 24	 52 31
Condenser water temperature(℃) inlet[2)]	 34	 27	 34
Test frequency	Rated frequency3)		
Test voltage	1)90% and 110% of rated voltage with a single nameplate rating 2)90% of minimum voltage and 110% of maximum voltage for units with a dual nameplate voltage		

1)The wet-bulb temperature condition is not required when testing air-cooled condensers which do not evaporate the condensate.

2)For equipment with water-cooled condensers,the water flowrate shall be the same as that used in cooling capacity test (minimum flowrate for equipment with multiple cooling capacity rating).For equipment incorporating a condenser water control valve, it shall be allowed to operate normally.

3)Equipment with dual-rated frequencies shall be tested at each frequency.

tor-overload protective devices.

4.2.5.3 The motor-overload protective device may trip only during the first 5 min of operation after the shutdown period of 3 min. During the remainder of that 1-h test period ,no motor-overload protective device shal trip.

4.2.5.4 For those models so designed that resumption of operation does not occur after the initial trip within the first 5 min,the equipment may ramain out of operation for not longer than 30 min ,it shall then operate continuously for 1 h.

4.3 Minimum cooling test

4.3.1 General conditions

The conditions which shall be used during the minimum cooling test are given in table 3.

4.3.2 Temperature conditions

If minimum operating temperature conditions are specified in the manufacturer's equipment specification sheets,they shall be used in lieu of those given in table 3.

4.3.3 Air-flow conditions

The controls,fan speeds,dampers and grilles of the equipment shall be set to produce the maximum tendency to frost or ice the evaporator,providing such settings are not contrary to the manufacturer's operating instructions.

4.3.4 Test conditions

4.3.4.1 Preconditions

The equipment shall be started and operated until the operating conditions have stabilized.

4.3.4.2 Duration of test

After the operating conditions have stabilized,the equipment shall be operated for a period of 4 h.

4.3.5 Performance requirements

4.3.5.1 After the end of the starting period of 10 min,no safety element shall cut off during the 4 h of operation.

4.3.5.2 At hte end of 4 h,any accumulation of ice or frost on the evaporator shall not cover more than 50% of the indoor-side face area of the evaporator coil.

4.4 Enclosure sweat and condensate disposal test

4.4.1 General conditions

Air-cooled equipment which rejects condensate to the condenser air shall meet the requirements of this test.The electrical conditions which shall be used during the enclosure sweat and condensate disposal test are given in table 4.

Table 3-Minimum cooling test conditions

Parameter	Standard test conditions
Temperature of air entering indoor side(℃) dry-bulb wet-bulb	21[1)] 15
Temperature of air entering outdoor side	Lowest limit recommended by manufacturer
Water temperature (℃) inlet	10
Water flowrate	As specified by the manufacturer
Test frequency	Rated frequency[1)]
Test voltage	Rated voltage[3)]
1) 21℃ or the lowest temperature above 21℃ at which the regulating (control) device will allow the equipment to operate. 2) Equipment with dual-rated frequencies shall be tested at each frequency. 3) Equipment with dual-rated voltages shall be tested at the higher voltage.	

4.4.2 Temperature conditions

The temperature conditions which shall be used during this test are given in table 4.

4.4.3 Air-flow conditions

The controls,fans,dampers and grilles of the equipment shall be set to produce the maximum tendency to sweat, provided such settings are not contrary to the manufacturer's operating instructions.

4.4.4 Test conditions

4.4.4.1 Preconditions

After establishment of the specified temperature conditions, the equipment shall be started with its condensate collection pan filled to the overflowing point,and the equipment shall be run until.the condensate flow has become uniform.

4.4.4.2 Duration of test

The equipment shall be operated for a period of 4 h.

4.4.5 Performance requirements

4.4.5.1 When operating under the test conditions specified in table 4,no condensed water shall drip,run or blow from the equipment.

4.4.5.2 Equipment which rejects condensate to the condenser air shall dispose all condensate and there shall be no dripping or blowing-off of water from the equipment such that the building or surroundings become wet.

4.5 Freeze-up test

4.5.1 General conditions

The freeze-up tests (air blockage test and drip test)may be conducted simultaneously with the minimum cooling test. The electrical conditions shall be those specified in table 5.

4.5.2 Temperature conditions

The temperature conditions for the freeze-up tests are given in table 5.

4.5.3 Air-flow conditions

4.5.3.1 Air blockage test

The controls of the equipment shall be set for maximum cooling and the fan speeds,dampers and grilles shall be set to produce the maximum tendency to frost or ice the evaporator,provided such settings are nort contrary to the manufacturer's operating instructions.

4.5.3.2 Drip test

The air inlet shall be covered to block completely the passage of air,so as to attempt to achieve complete blockage of the evaporator coil by frost.

4.5.4 Test conditions

4.5.4.1 Air blockage test

The test shall be continuous,with the equipment operating on the cooling cycle for 4 h after establishment of the specified temperature conditions.

4.5.4.2 Drip test

The equipment shall be operated for 6 h after which the equipment shall be stopped and the air-inlet covering removed until the accumulation of ice or frost has melted.The equipment shall then be turned on again,with the fans operating at the highest speed,for 5 min.

4.5.5 Performance requirements

Table 4-Enclosure sweat and condensate disposal test conditions

Parameter	Standard test conditions
Temperature of air entering indoor side(℃) dry-bulb wet-bulb	 27 24
Temperature of air entering outdoor side(℃) dry-bulb wet-bulb[1)]	 27 24
Condenser water temperature (℃) outlet	 27
Test frequency	Rated frequency[2)]
Test voltage	Rated voltage[3)]

1) The wet-bulb temperature condition is not required when testing air-cooled condensers which do not evaporate the condensate.
2) Equipment with dual-rated frequencies shall be tested at each frequency.
3) Equipment with dual-rated voltages shall be tested at the higher voltage.

Table 5-Freeze-up test conditions

Parameter	Standard test conditions	
	T1 and T3	T2
Temperature of air entering indoor side(℃) dry-bulb wet-bulb	21[1)] 15	21[1)] 15
Temperature of air entering outdoor side(℃) dry-bulb wet-bulb	21 ----	10 ----
Condenser water temperature (℃) outlet[2)]	21	10
Water flowrate	As specified by the manufacturer	
Test frequency	Rated frequency[3)]	
Test voltage	Rated voltage[4)]	

1) 21℃ or the lowest temperature above 21℃ at which the regulating (control) device will allow the equipment to operate.
2) For equipment with water-cooled condensers, the condenser water flowrate shall be maintained at that estblished in table 1 except that, if more than one rating is provided, then the highest flowrate shall be used.
3) Equipment with dual-rated frequencies shall be tested at each frequency.
4) Equipment with dual-rated voltages shall be tested at the higher voltage.

4.5.5.1 Air blockage test
At the end of 4 h of operation,any accumulationm of ice or frost on the evaporator shall not cover more than 50% of the indoor-side face area of the evaporator coil.

4.5.5.2 Drip test
During the test,no ice shall drip from the coil and no water shall drip or blow off the equipment on the indoor side.

5 Heating tests

5.1 Heating capacity ratings

5.1.1 General conditions
All equipment within the scope of this International Standard shall have the heating capacities and coefficients of performance determined in accordance with the provisions of this International Standard and rated at the conditions specified in table 6.The electrical input values used for rating purposes shall be measured during the heating capacity test.

5.1.2 Temperature conditions

5.1.2.1 Test conditions stated in table 6 shall be considered standard rating conditions.

5.1.2.2 If a manufacturer specifies that the equipment is not suitable for operation under the extra-low temperature test conditions,tests shall be made only at the high and low temperatures specified in table 6.

5.1.3 Air-flow conditions

5.1.3.1 Heating-only equipment shall use the air-flow quantity specified by the manufacturer.
5.1.3.2 For equipment which provides both heating and cooling,the test shall be conducted at the same air-flowrate as for the cooling capacity rating test.

5.1.3.3 When determining air-flow quantities for rating purposes,tests shall be conducted under standard rating conditions (see table 6)with the heating means in operation with 0 Pa static maintained in the air discharge of the equipment.

5.1.4 Test conditions

5.1.4.1 Preconditions

5.1.4.1.1 When using the calorimeter method,two simultaneous methods of determining capacities shall be used. One method determines the capacity on the indoor side,the other measures the capacity on the outdoor side.These two simultaneous determinations shall agree within 4% of the value obtained on the indoor side for the test to be valid.

5.1.4.1.2 Tests shall be conducted at the selected conditions with no changes in fan speed or system resistance made to correct for variations from the standard barometric pressure (see 3.3).

5.1.4.1.3 The test room reconditioning apparatus and the equipment under test shall be operated until equilibrium conditions are attained,but for not less than 1 h,before test data are recorded.

5.1.4.2 Duration
Data shall then be recorded for 30 min at 5-min intervals until seven consecutive sets of readings within the tolerances specified in table 12 have been attained.

5.1.4.3 Frosting conditions

5.1.4.3.1 Under some conditions of heating,a small amount of frost may accumulate on the outdoor coil and a distinction needs to be made between nonfrosting and frosting operations for the test as a whole. For the purposes of this International Standard,the test is to be considered non-frosting provided the effect is such that the indoor and outdoor leaving air temperatures remain within the operating tolerances for non-frosting operating specifide in table 12.When the leaving air temperature exceeds the permitted range because of frost,the procedure for the heating capacity test in the defrost region described in A.4 of annex A shall be used.

5.1.4.3.2 If,under test conditions,defrost action is experienced within a 3-h period ,or the test tolerances of table 12 are exceeded,then the procedure for transient heating capacity tests (see B.2) shall be used.

5.2 Maximum heating test

5.2.1 General conditions
The electrical conditions given in table 7 shall be used during the maximum heating test.The determination of maximum heating is not required under performance test conditions.The test voltages shall be maintained at the specified percentages under running conditions.

5.2.2 Temperature conditions
The temperature conditions given in table 7 shall be used during these tests unless the manufacturer specifies other conditions in the manufacturer's equipment specification sheets.

Table 6-Test conditions for determination of heating capacity

Parameter	Standard test conditions
Temperature of air entering indoor side (℃) dry-bulb wet-bulb(maximum)	 20 15
Temperature of air entering outdoor side (high[1)]) (℃) dry-bulb wet-bulb	 7 6
Temperature of air entering outdoor side (low[1)]) (℃) dry-bulb wet-bulb	 2 1
Temperature of air entering outdoor side (extra-low[1)2)]) (℃) dry-bulb wet-bulb	 -7 -8
Test frequency	Rated frequency[3)]
Test voltage	Rated voltage[4)]

1) If defrosting occurs during the high. low. or extra-low heating capacity tests, testing under these conditions shall be accomplished using the indoor air-enthalpy method (seeB.2 and C.3.3).
2) Test is to be conducted only if the manufacturer specifies that the equipment is suitable for operation under these conditions.
3) Equipment with dual-rated frequencies shall be tested at each frequency.
4 The test voltage on dual-rated voltage equipment shall be performed at both voltages or at the lower of the two voltages if only a single rating is published.

5.2.3 Air-flow conditions
The controls of the equipment shall be set for maximum heating and all ventilating air dampers and exhaust air dampers shall be closed.

5.2.4 Test conditions

5.2.4.1 Preconditions
The equipment shall be operated continuously for 1 h after the specified air temperatures and the equilibrium condensate leve have been establihed.

5.2.4.2 Duration
All power to the equipment shall then be cut off for 3 min and then restored for 1 h.

5.2.5 Performance requirements

5.2.5.1 Heat pumps shall meet the following requirements when operating under the conditions specified in table 7:
-during one entire test,the heat pump shall operate without indication of damage;
-the heat pump motors shall operate continuously for the first hour of the test without tripping of the motor-overload protective devices.

5.2.5.2 The motor-overload protective device may trip only during the first 5 min following the 3-min cutoff of power. During the remainder of that 1-h test period,no motor-overload protective device shall trip.

5.2.5.3 For equipment that is so designed that resumption of operation does not occur after the initial trip within the first 5 min,the equipment may remain out of operation for not longer than 30 min.It shall then operate continuously for 1 h.

5.3 Minimum heating test

5.3.1 General conditions
The electrical conditions given in table 8 shall be used for this test.The voltages shall be maintained at the specified percentages under running conditions.

5.3.2 Tempe ature conditions
The temperature conditions for this test shall be as given in table 8,unless the manufacturer specifies other conditions in the manufacturer's equipment specification sheets.

5.3.3 Air-flow conditions
The controls of the equipment shall be set for maximum heating,and all ventilating air dampers and exhaust air dampers shall be closed.

5.3.4 Test conditions

5.3.4.1 Preconditions
The equipment shall be operated for 1 h under the temperature conditions and voltage specified in table 8.

5.3.4.2 Duration
After the equipment has reached stable operating

conditions,these conditions shall be maintained for 4 h.

5.3.5 Performance requirements

The heat pump shall operate throughout the test without a cutoff by any safety control.

5.4 Automatic defrost test

5.4.1 General conditions

The electrical conditions given in table 9 shall be used during the automatic defrost test for heat pumps.

5.4.2 Temperature conditions

The temperature conditions given in table 9 shall be used during the automatic defrost test for heat pumps.

5.4.3 Alr-flow conditions

Unless prohibited by the manufacturer,the indoorside fan is to be adjusted to the highest speed and the unit outdoor-side fan to the lowest speed,if separately adjustable.

5.4.4 Test conditions

5.4.4.1 Preconditions

The equipment shall be operated until the temperatures specified in table 9 have been stabilized.

5.4.4.2 Duration

The heat pump shall remain in operation for two complete defrosting periods or for 3 h,whichever is the longer.

5.4.5 Performance requirements

During and directly after the defrosting periods,the air temperature to the outdoor side shall not rise by more than

Table 7-Maximum heating test conditions

Parameter	Standard test conditions
Temperature of air entering indoor side (℃) dry-bulb	27
Temperature of air entering outdoor side(℃) dry-bulb wet-bulb	24 18
Test frequency	Rated frequency[1)]
Test voltage	a) 90% and 110% of rated voltage for equipment with a single nameplate rating b) 90% of minimum voltage and 110% of maximum voltage for equip-ment with a dual nameplate voltage
1) Equipment with dual-rated frequencies shall be tested at each frequency.	

Table 8-Minimum heating test conditions

Parameter	Standard test conditions
Temperature of air entering indoor side (℃) dry-bulb	27
Temperature of air entering outdoor side(℃) dry-bulb wet-bulb	24 18
Test frequency	Rated frequency[1)]
Test voltage	Rated voltage
1) If the equipment can be operated under the “extra-low” temperature condition,-7℃ dry-bulb and -8℃ wet-bulb temperatures shall be used. 2) Equipment dual-rated frequencies shall be tested at each frequency. 3) Equipment with dual-rated voltages shall be tested at the higher voltage.	

Table 9-Automatic defrost test conditions

Parameter	Standard test conditions
Temperature of air entering indoor side(°C) dry-bulb wet-bulb (maximum)	 20 12
Temperature of air entering outdoor side(°C) dry-bulb wet-bulb	 2 1
Test frequency	Rated frequency[1)]
Test voltage	Rated voltage[2)]
1) Equipment with dual-rated frequencies shall be tested at each frquency. 2) The test voltage on dual-rated voltage equipment shall be performed at both voltages or at the higher of the two voltages if only a single rating is published.	

5℃.During the defrosting period,the temperature of the air from the indoor side of the equipment shall not be lower than 18℃ for longer than 1 min.This may be accomplished, if necessary,by using additional heating,provided and mounted in the equipment,or specified for use by the manufacturer.

6 Test methods and uncertainties of measurements

6.1 Test methods

6.1.1 Capacity and performance tests of non-ducted air conditioners and heat pumps are conducted using either the room calorimeter method or the indoor airenthalpy method. Both methods are permitted subject to the provision that the results are within the limits of the uncertainties of measurement established in 6.2.

6.1.2 The room calorimeter can be of either the calibrated type or the balanced ambient type,as described in annex B.

6.1.3 In the air-enthalpy method,heating or cooling capacities are determined from measurements of entering and leaving wet-and dry-bulb temperatures and the associated air-flowrate.This method can be employed for the indoor-side tests of all equipment.Subject to the additional requirements of annex F,this method may be used for the outdoor-side tests.This method can be applied to water -cooled condensing equipment for which a second determination of the cooling capacity from measurements on the water-side is possible.

6.2 Uncertainties of measurement

The uncertainties of measurement shall not exceed the values specified in table 10.

6.3 Variations in individual readings

The maximum allowable variations of individual readings from stated conditions in the performance tests shall be as shown in table 11.The maximum permissible variation of any observation during the capacity test shall be as shown in table 12.

6.4 Test tolerances

6.4.1 The maximum permissible variation of any observation represents the greatest permissible difference between maximum and minimum instrument observations during the test. When expressed as a percentagem, the maximum allowable variation is the specified percentage of the arithmetical mean of the observations.

6.4.2 The maximum permissible variations of the mean of the test observations from the standard or desired test conditions are shown in table 12.

7 Test results

7.1 Capacity calculations

7.1.1 General

The results of a capacity test shall express quantitatively the effects produced upon air by the equipment tested. For given test conditions, the capacity test results shall include such of the following quantities as are applicable to cooling or heating and to the type of equipment tested:

a) total cooling capacity, in watts;

Table 10-Uncertainties of measurement of indicated values

Measured quantity	Uncertainty of measurement[1)]
Water temperature temperature difference volume flow static pressure difference	 ±0.1℃ ±0.1℃ ±5% ±5Pa
Air dry-bulb temperature wet-bulb temperature volume flow static pressure difference	 ±0.2℃ ±0.2℃ ±5% ±5 Pa for pressure ≤ 100 Pa ±5 Pa for pressure > 100 Pa
Electrical imputs	±5%
Time	±0.2%
Mass	±1.0%
Speed	±1.0%

1) Uncertainty of measurement is an estimate characterizing the range of values within which the true value of a measurand lies (measurand is a quantity sub; ect to measurement).

NOTE-Uncertainty of measurement comprises, in general, many components. Some of these components may be estimated on the basis of the statistical distribution of the results of series of measurements and can be characterized by experimental distribution of the results of series of measurements and can be characterized by experimental standard deviations. Estimates of other components can be based on experience or other information.

Table 11-Variations allowed in performance test readings

Quantity measured	Maximum allowable variations in individual readings from stated performance test conditions
For minimum operating conditions test air temperatures water temperatures	 ±1℃ ±0.6℃
For maximum operating conditions test air temperatures water temperatures	 −1℃ −0.6℃
For other tests air temperatures water temperatures	 ±1℃ ±0.6℃

Table 12-Variations allowed in capacity test readings

Peadings	Variations of arithmetical mean values from specified test conditions	Maximum variation of individual reading from rating conditlons
Temperature of air entering indoor side		
dry-bulb	±0.3℃	±1.0℃
wet-bulb	±0.2℃	±0.5℃
Temperature of air entering outdoor side		
dry-bulb	±0.3℃	±1.0℃
wet-bulb	±0.2℃	±0.5℃
Temperature of air leaving outdoor side		
dry-bulb		±1.0℃
Air volume flowrate	±5%	±10%
Voltage	±1%	±2%
Water temperature		
inlet	±0.1℃	±0.2℃
outlet	±0.1℃	±0.2℃
Water volume flowrate	±1%	±2%
External resistance to air-flow	±5Pa	±10Pa

b) sensible cooling capacity, in watts;
c) latent cooling capacity, in watts;
d) heating capacity, in watts;
e) indoor-side air-flowrate, in cubic metres per second of standard air;
f) external resistance to indoor air-flow, in pascals;
g) effective power input to the equipment or individual power inputs to each of the electrical equipment components, in watts.

7.1.2 Adjustments

Test results shall be used to determine capacities without adjustment for permissible variations in test conditions, except that air enthalpies, specific volumes and isobaric specific heat capacities shall be corrected for deviations from saturation temperature and standard barometric pressure.

7.2 Data to be recorded

The date to be recorded for the capacity tests are given in tables 13 and 14 for the calorimeter test method and in tables 15 for the indoor air-enthalpy test method. The tables identify the general information required but are not intended to limit the data to be obtained. Electrical input values used for rating purposes shall be those measured during the capacity tests.

7.3 Test report

7.3.1 General information

As a minimum,the test report shall contain the following general information:
a) date;
b) test institute;
c) test location;
d) test method used (calorimeter or air enthalpy);
e) test supervisor;
f) test objective,type designation;
g) reference to this International Standard.

7.3.2 Additional information

The information given on the nameplate should be noted on the test report.

7.3.3 Rating test results

The values given shall be the mean of the values taken over the test period.

8 Marking provisions

8.1 Nameplate requirements

Each non-ducted air conditioner and heat pump shall have a nameplate,firmly attached and in a location accessible for reading.

8.2 Nameplate information

The nameplate shall carry the following minimum information in addition to the information required by international safety standards:

a)manufacturer's name or trademark[3];

b)distinctive type or model designation and serial number;

c)rated voltage(s);

d)rated frequency(ies);

e)climate application type(s)(see 4.1);

f)total cooling capacity[4];

g)heating capacity[4];

h)refrigerant designation and refrigerant mass charge.

8.3 Refrigerant designation

Refrigerant designation shall be in accordance with ISO 817.

8.4 Split systems

The information in a),b),c),d) and h)in 8.2 shall be provided on each element of a split system.

9 Publication of ratings

Table 13 - Data to be recorded for calorimeter cooling capacity tests

No.	Data
1	Date
2	Observers
3	Barometric pressure
4	Speed of equipment cooling fan(s)
5	Applied voltage
6	Frequency
7	Total power input to equipment[1]
8	Total current input to equipment
9	Control dry-bulb and wet-bulb temperature of air (indoor-side calorimeter compartment)[2]
10	Control dry-bulb and wet-bulb temperatrue of air (outdoor-side calorimeter compartment)[2]
11	Average air temperature outside the calorimeter (calibrated room-type;see figure B.4)
12	Total power input to indoor-side and outdoor-side compartments
13	Quantity of water evaporated in humidifier
14	Temperature of humidifier water entering indoor-side and outdoor-dide (if used) compartments or in humidifier tank
15	Cooling water flowrate through outdoor-side compartment heat-rejection coil
16	Temperature of cooling water entering outdoor-side compartment, from heat-rejection coil
17	Temperature of cooling water leaving outdoor-side compartment, from heat-rejection coil
18	Cooling water flowrate through equipment condenser (water-cooled units only)
19	Temperature of water entering equipment condenser (water-cooled units only)
20	Temperature of water leaving equipment condenser (water-cooled units only)
21	Mass of water from equipment which is condensed in the reconditioning equipment[3]
22	Temperature of condensed water leaving outdoor-side compartment
23	Volume of air-flow through measuring nozzle of separating partition
24	Air-static pressure difference across separating partition of calorimeter compartments

1) Total power input to the equipment, except if more than one external power connection if provided on the equipment; record input to each connection separately.

2) See B.1.7.

3) For equipment which evaporates condensate on the outdoor coil.

Table 14 - Data to be recorded for calorimeter heating capacity tests

No.	Data
1	Date
2	Observers
3	Barometric pressure
4	Speed of equipment heating fan(s)
5	Applied voltage
6	Frequency
7	Total power input to equipment[1)]
8	Total current input to equipment
9	Control dry-bulb and wet-bulb temperature of air (indoor-side calorimeter compartment)[2)]
10	Control dry-bulb and wet-bulb temperature of air (outdoor-side calorimeter compartment)[2)]
11	Average air temperature outside the calorimeter (calibrated room-type;see figure B.4)
12	Total power input to indoor-side and outdoor-side compartments
13	Quantity of water evaporated in humidifier
14	Temperature of humidifier water entering indoor-side and outdoor-dide (if used) compartments or in humidifier tank
15	Cooling water flowrate through outdoor-side compartment heat-rejection coil
16	Temperature of cooling water entering outdoor-side compartment, for heat-rejection coil
17	Temperature of cooling water leaving outdoor-side compartment, from heat-rejection coil
18	Water condensed in indoor-side or outdoor-side compartment
19	Temperature of condensed water leaving indoor-side compartment
20	Volume of air-flow through measuring nozzle of separating partition
21	Air-static pressure difference across separating partition of calorimeter compartments

1) Total power input to the equipment, except if more than one external power connection if provided on the equipment; record input to each connection separately.
2) See B.1.7.

Table 15 - Data to be recorded for calorimeter cooling capacity tests

No.	Data
1	Date
2	Observers
3	Barometric pressure
4	Time of test
5	Power input[1)]
6	Applied voltage(s)
7	Current
8	Frequency
9	External resistance to air-flow
10	Fan speed(s) (if adjustable)
11	Dry-bulb temperature of air entering equipment
12	Wet-bulb temperature of air entering equipment
13	Dry-bulb temperature of air leaving equipment
14	Wet-bulb temperature of air leaving equipment
15	Volume flowrate of air and all relevant measurements for its calculation

1) Total power input and, where required, input to equipent components.

9.1 Standard ratings

9.1.1 Standard ratings shall be published for cooling capacities (sensible,latent and total),heating capacity,energy efficiency ratio and coefficient of performance,as appropriate, for each unit produced in conformance to this international Standard.These ratings shall be based on data obtained at the established rating conditions in accordance with the provisions of this International Standard.

9.1.2 The values of the standard capacities shall be expressed in kilowatts,rounded to the nearest 0,1 kW.

9.1.3 The values of energy efficiency ratios and coefficients of performance shall be expressed in multiples of the nearest 0,05.

9.1.4 Each capacity rating shall be followed by the corresponding voltage and frequency rating.

9.2 Other ratings

Additional ratings may be published based on conditions other than those specified as standard rating conditions if they are clearly specified and the data are determined by the methods specified in this international Standard ,or by analytical methods which are verifiable by the test methods specified in this international Standard.

Annex3 PCB Senser resistance

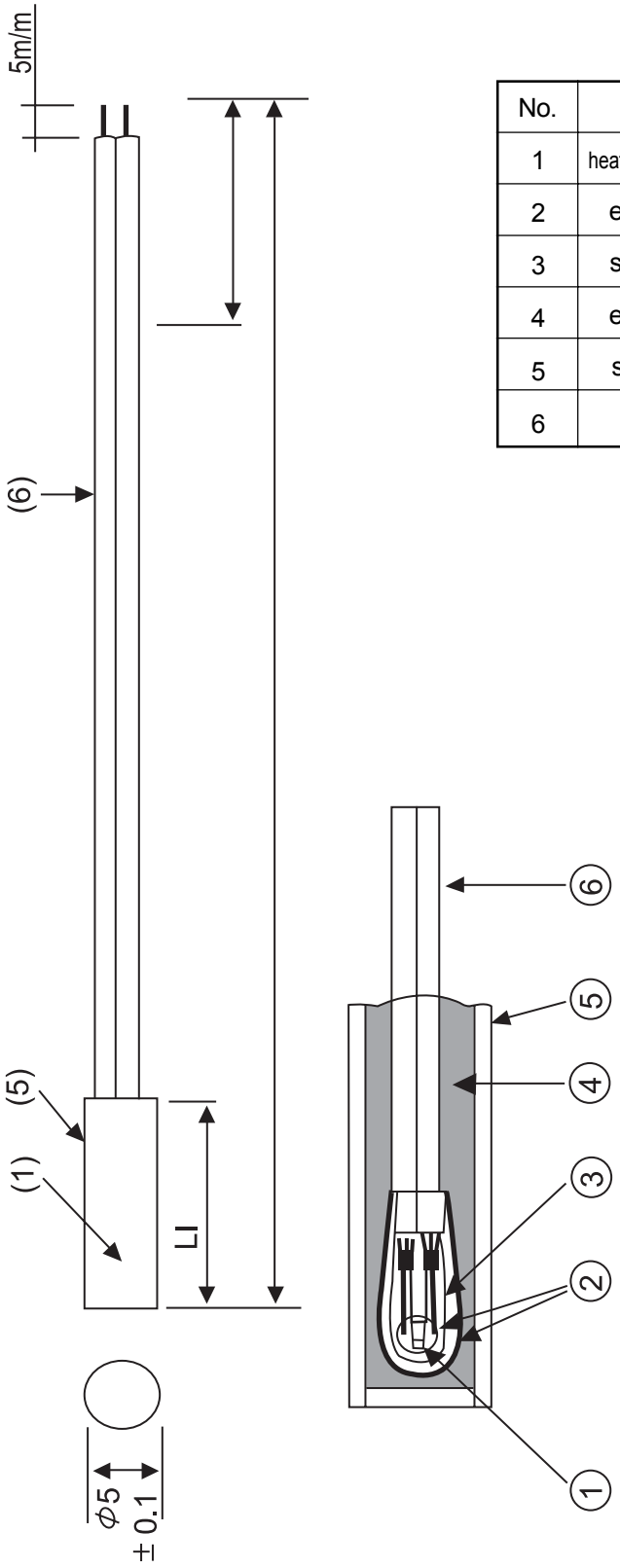

Tube temperature sensor

No.	Name	Material	Specification
1	heat-variable resistor	AT502 R25=5KΩ ±1%,B25/50=3470 ± 1%	
2	epoxy resin	ED95	
3	silicon coat	KE66	
4	epoxy resin	2805ET+GELL	
5	sensor end	Copper	5*1.25
6	string	PVC 105℃	2P AWG26 Black

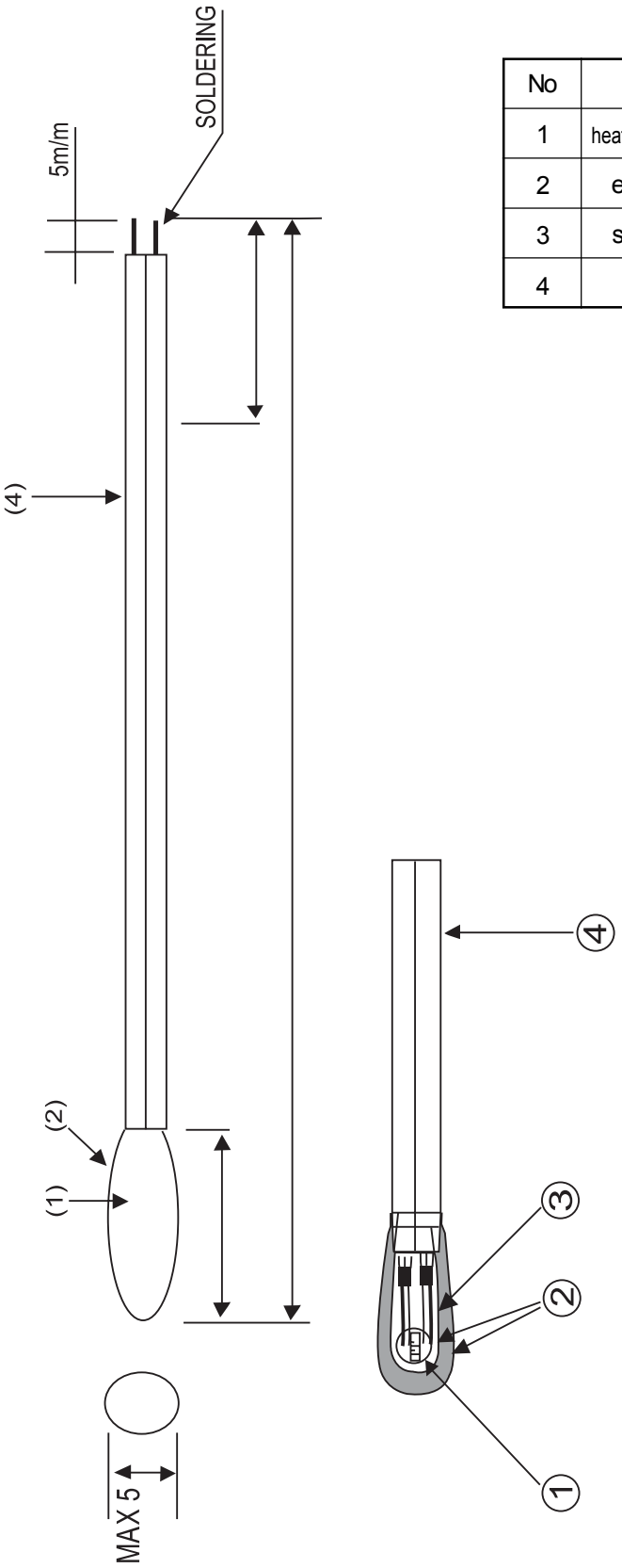

Room temperature sensor

No	Name	Material	Specification
1	heat-variable resistor	AT502 R25=5KΩ ±1%,B25/50=3470 ± 1%	
2	epoxy resin	ED95	
3	silicon coat	KE66	
4	string	PVC 105℃	2P AWG26 Black

Table1 502AT R25=5kΩ± 1%
B25/50=3470K ± 1%

academic temperature(℃)	minimum resistance(kΩ)	middle resistance (kΩ)	maximal resistance(kΩ)
-30.0	61.6030	63.7306	66.0233
-29.0	58.3323	60.3223	62.4543
-28.0	55.2565	57.1180	59.1013
-27.0	52.3627	54.1043	55.9497
-26.0	49.6390	51.2686	52.9864
-25.0	47.0745	48.5994	50.1989
-24.0	44.6589	46.0860	47.5757
-23.0	42.3326	43.7182	45.1062
-22.0	40.2367	41.4863	42.7804
-21.0	38.2130	39.3832	40.5891
-20.0	36.3038	37.3992	38.5237
-19.0	34.5019	35.5274	36.5763
-18.0	32.8008	33.7607	34.7394
-17.0	31.1940	32.0927	33.0060
-16.0	29.6729	30.5172	31.3698
-15.0	28.2411	29.0286	29.3243
-14.0	26.8344	27.6216	28.3653
-13.0	25.6012	26.2913	26.9860
-12.0	24.3871	25.0330	25.6822
-11.0	23.2379	23.8424	24.4493
-10.0	22.1498	22.7155	23.2829
-9.0	21.1192	21.6486	22.1792
-8.0	20.1428	20.6380	21.1343
-7.0	19.2173	19.6806	20.1449
-6.0	18.3399	18.7732	19.2077
-5.0	17.5078	17.9129	18.3196
-4.0	16.7183	17.0970	17.4778
-3.0	15.9690	16.3230	16.6796
-2.0	15.2578	15.5886	15.9225
-1.0	14.5824	14.8913	15.2042
0.0	13.9408	14.2293	14.5224
1.0	13.3320	13.6017	13.3756
2.0	12.7535	13.0057	13.2616
3.0	12.2036	12.4393	12.6785
4.0	11.6808	11.9011	12.1245
5.0	11.1835	11.3894	11.5981

academic temperature(℃)	minimum resistance(kΩ)	middle resistance (kΩ)	maximal resistance(kΩ)
46.0	2.2868	2.3273	2.3683
47.0	2.2092	2.2491	2.2894
48.0	2.1346	2.1739	2.2136
49.0	2.0630	2.1016	2.1407
50.0	1.9941	2.0321	2.0706
51.0	1.9232	1.9656	2.0035
52.0	1.8647	1.9015	1.9389
53.0	1.8036	1.8399	1.8766
54.0	1.7448	1.7804	1.8167
55.0	1.3881	1.7232	1.7588
56.0	1.6335	1.6680	1.7031
57.0	1.5809	1.6149	1.6494
58.0	1.5302	1.5636	1.5976
59.0	1.4814	1.5142	1.5476
60.0	1.4343	1.4666	1.4994
61.0	1.3890	1.4206	1.4529
62.0	1.3452	1.3763	1.4080
63.0	1.3030	1.3336	1.3648
64.0	1.2623	1.2923	1.3230
65.0	1.2231	1.2526	1.2827
66.0	1.1852	1.2142	1.2437
67.0	1.1487	1.1771	1.2061
68.0	1.1134	1.1413	1.1698
69.0	1.0794	1.1063	1.1348
70.0	1.0465	1.0734	1.1009
71.0	1.0148	1.0412	1.0682
72.0	0.9842	1.0100	1.0365
73.0	0.9546	0.9800	1.0060
74.0	0.9260	0.9509	0.9765
75.0	0.8984	0.9223	0.9479
76.0	0.8717	0.8957	0.9203
77.0	0.8460	0.8695	0.8936
78.0	0.8211	0.8441	0.3673
79.0	0.7970	0.8196	0.8428
80.0	0.7737	0.7959	0.8187
81.0	0.7512	0.7730	0.7953
82.0	0.7294	0.7508	0.7727
83.0	0.7084	0.7293	0.7509
84.0	0.6880	0.7086	0.7297
85.0	0.6683	0.6885	0.7092

academic temperature(℃)	minimum resistance(kΩ)	middle resistance (kΩ)	maximal resistance(kΩ)
6.0	10.7104	10.9028	11.0977
7.0	10.2601	10.4399	10.6219
8.0	9.8315	9.9995	10.1694
9.0	9.4233	9.5802	9.7383
10.0	9.0344	9.1810	9.3290
11.0	8.6640	8.8008	8.9389
12.0	8.3109	88.4385	8.5674
13.0	7.9742	8.0934	8.2135
14.0	7.6532	7.7643	7.8764
15.0	7.3469	7.4506	7.5550
16.0	7.0547	7.1513	7.2486
17.0	6.7759	6.8658	6.9564
13.0	6.5096	6.5934	6.6776
19.0	6.2553	6.3333	6.4117
20.0	6.0125	6.0850	6.1579
21.0	5.7804	5.8479	5.9155
22.0	5.5586	5.6213	5.6841
23.0	5.3466	5.4048	5.4630
24.0	5.1439	5.1978	5.2518
25.0	4.9500	5.0000	5.0500
26.0	4.7609	4.8108	4.3608
27.0	4.5800	4.6298	4.3797
28.0	4.4071	4.4566	4.5063
29.0	4.2416	4.2909	4.3404
30.0	4.0833	4.1323	4.1815
31.0	3.9317	3.9804	4.0292
32.0	3.7866	3.8349	3.8334
33.0	3.6477	3.6935	3.7436
34.0	3.5146	3.5620	3.6097
35.0	3.3871	3.4340	3.4812
36.0	3.2650	3.3113	3.3581
37.0	3.1478	3.1937	3.2399
38.0	3.0356	3.0809	3.1266
39.0	2.9279	2.9727	3.0178
40.0	2.8264	2.8688	2.9134
41.0	2.7256	2.7692	2.8131
42.0	2.6305	2.6735	2.7169
43.0	2.5393	2.0816	2.6244
44.0	2.4517	2.4934	2.5356
45.0	2.3676	2.4087	2.4503

academic temperature(℃)	minimum resistance(kΩ)	middle resistance (kΩ)	maximal resistance(kΩ)
86.0	0.6493	0.6690	0.6894
87.0	0.6309	0.6502	0.6702
88.0	0.6130	0.6320	0.6516
89.0	0.5957	0.6144	0.6336
90.0	0.5790	0.5973	0.6161
91.0	0.5629	0.5808	0.5992
92.0	0.5472	0.5647	0.5828
93.0	0.5320	0.5492	0.5670
94.0	0.5173	0.5342	0.5516
95.0	0.5031	0.5196	0.5367
96.0	0.4893	0.5055	0.5223
97.0	0.4759	0.4919	0.5083
98.0	0.4630	0.4736	0.4947
99.0	0.4505	0.4658	0.4816
100.0	0.4383	0.4533	0.4688

Table2 502AT EP1F 502AT-40236

temperature(℃)	maximal resistance(kΩ)	middle resistance (kΩ)	minimum resistance(kΩ)	Errors temperature(℃)	
0	13.56	13.29	13.03	-0.5	+0.5
1	12.99	12.74	12.50	-0.6	+0.5
2	12.46	12.22	11.99	-0.5	+0.5
3	11.94	11.73	11.51	-0.5	+0.6
4	11.46	11.25	11.05	-0.5	+0.5
5	10.99	10.80	10.61	-0.6	+0.5
6	10.55	10.37	10.19	-0.5	+0.5
7	10.13	9.960	9.793	-0.5	+0.5
8	9.728	9.569	9.412	-0.5	+0.6
9	9.345	9.196	9.049	-0.6	+0.5
10	8.979	8.840	8.702	-0.4	+0.4
11	8.626	8.496	8.366	-0.4	+0.4
12	8.289	8.167	8.045	-0.4	+0.4
13	7.967	7.853	7.739	-0.4	+0.4
14	7.660	7.553	7.447	-0.4	+0.4
15	7.367	7.267	7.167	-0.4	+0.4
16	7.087	6.993	6.900	-0.4	+0.4
17	6.819	6.731	6.644	-0.4	+0.4
18	6.563	6.481	6.400	-0.4	+0.4
19	6.319	6.242	6.165	-0.4	+0.4
20	6.085	6.013	5.942	-0.4	+0.4
21	5.859	5.793	5.726	-0.4	+0.4
22	5.643	5.581	5.519	-0.3	+0.4
23	5.437	5.379	5.321	-0.3	+0.3
24	5.239	5.185	5.132	-0.3	+0.3
25	5.050	5.000	4.950	-0.3	+0.3
26	4.871	4.821	4.771	-0.3	+0.3
27	4.700	4.650	4.601	-0.3	+0.3
28	4.536	4.486	4.437	-0.4	+0.4
29	4.379	4.329	4.280	-0.4	+0.4
30	4.228	4.179	4.130	-0.4	+0.4
31	4.082	4.033	3.984	-0.4	+0.4
32	3.942	3.894	3.845	-0.4	+0.4
33	3.808	3.760	3.711	-0.4	+0.4
34	3.679	3.631	3.583	-0.4	+0.4
35	3.556	3.508	3.461	-0.4	+0.4
36	3.437	3.390	3.343	-0.5	+0.5
37	3.323	3.276	3.229	-0.5	+0.5
38	3.213	3.167	3.121	-0.6	+0.6
39	3.108	3.062	3.017	-0.5	+0.5
40	3.007	2.961	2.916	-0.5	+0.5
41	2.908	2.864	2.819	-0.5	+0.5
42	2.814	2.770	2.726	-0.5	+0.5
43	2.723	2.679	2.636	-0.5	+0.5
44	2.636	2.593	2.550	-0.6	+0.6
45	2.552	2.509	2.467	-0.6	+0.6
46	2.471	2.429	2.387	-0.6	+0.6
47	2.393	2.352	2.314	-0.6	+0.6
48	2.310	2.277	2.237	-0.6	+0.6
49	2.246	2.206	2.166	-0.6	+0.6
50	2.177	2.137	2.098	-0.6	+0.6

temperature(℃)	maximal resistance(kΩ)	middle resistance (kΩ)	minimum resistance(kΩ)	Errors temperature(℃)	
50	2.177	2.137	2.098	-0.6	+0.6
51	2.109	2.070	2.031	-0.6	+0.6
52	2.044	2.006	1.967	-0.7	+0.7
53	1.981	1.843	1.906	-0.7	+0.7
54	1.921	1.883	1.847	-0.7	+0.7
55	1.863	1.826	1.789	-0.7	+0.7
56	1.807	1.770	1.734	-0.7	+0.7
57	1.752	1.717	1.681	-0.7	+0.7
58	1.700	1.665	1.630	-0.7	+0.7
59	1.650	1.615	1.581	-0.8	+0.8
60	1.601	1.567	1.534	-0.8	+0.8
61	1.554	1.521	1.488	-0.8	+0.8
62	1.509	1.476	1.443	-0.8	+0.8
63	1.465	1.432	1.401	-0.8	+0.8
64	1.423	1.391	1.359	-0.8	+0.8
65	1.382	1.350	1.319	-0.8	+0.8
66	1.342	1.311	1.281	-0.8	+0.9
67	1.304	1.274	1.244	-0.9	+0.9
68	1.267	1.237	1.208	-0.9	+0.9
69	1.232	1.202	1.173	-0.9	+0.9
70	1.197	1.168	1.140	-0.9	+0.9
71	1.164	1.135	1.108	-0.9	+0.9
72	1.131	1.103	1.076	-0.9	+0.9
73	1.100	1.073	1.046	-0.9	+1.0
74	1.070	1.043	1.016	-1.0	+1.0
75	1.041	1.014	0.9880	-1.0	+1.0
76	1.012	0.9861	0.9605	-1.0	+1.0
77	0.9849	0.9592	0.9340	-1.0	+1.0
78	0.9584	0.9331	0.9084	-1.0	+1.0
79	0.9327	0.9079	0.8836	-1.0	+1.0
80	0.9079	0.8835	0.8596	-1.1	+1.1
81	0.8838	0.8598	0.8363	-1.1	+1.1
82	0.8604	0.8368	0.8137	-1.1	+1.1
83	0.8378	0.8146	0.7919	-1.1	+1.1
84	0.8159	0.7930	0.7708	-1.1	+1.1
85	0.7846	0.7722	0.7503	-1.1	+1.1
86	0.7740	0.7520	0.7305	-1.1	+1.1
87	0.7640	0.7323	0.7112	-1.2	+1.2
88	0.7347	0.7134	0.6926	-1.2	+1.2
89	0.7159	0.6950	0.6746	-1.2	+1.2
90	0.6977	0.6771	0.6571	-1.2	+1.2
91	0.6801	0.6599	0.6402	-1.2	+1.2
92	0.6631	0.6432	0.6238	-1.2	+1.2
93	0.6465	0.6270	0.6080	-1.3	+1.3
94	0.6805	0.6113	0.5926	-1.3	+1.3
95	0.6150	0.5961	0.5777	-1.3	+1.3
96	0.5990	0.5813	0.5632	-1.3	+1.3
97	0.5852	0.5670	0.5482	-1.3	+1.3
98	0.5710	0.5531	0.5356	-1.3	+1.3
99	0.5572	0.5396	0.5224	-1.4	+1.4
100	0.5438	0.5265	0.5096	-1.4	+1.4

temperature(℃)	maximal resistance(kΩ)	middle resistance (kΩ)	minimum resistance(kΩ)	Errors temperature(℃)	
100	0.5438	0.5265	0.5096	-1.4	+1.4
101	0.5306	0.5135	0.4969	-1.4	+1.4
102	0.5177	0.5010	0.4847	-1.4	+1.4
103	0.5053	0.4888	0.4728	-1.4	+1.4
104	0.4932	0.4769	0.4612	-1.4	+1.4
105	0.4814	0.4654	0.4500	-1.4	+1.4
106	0.4700	0.4543	0.4391	-1.4	+1.5
107	0.4589	0.4435	0.4285	-1.5	+1.5
108	0.4481	0.4329	0.4183	-1.5	+1.5
109	0.4376	0.4227	0.4083	-1.5	
110	0.4275	0.4128	0.3986	-1.5	

Table3 R25=50kΩ± 3%　　R25/50=3950kΩ ± 2%

temperature (℃)	minimum resistance(ksz)	middle resistance (kΩ)	maximal resistance(kΩ)	temperature (℃)	Sinus	middle resistance (kΩ)	Toplimit
-30	833.9	911.4	995.2	20	59.37	61.48	63.61
-29	782.0	853.5	930.7	21	56.80	58.77	60.74
-28	733.8	799.8	871.1	22	54.36	56.19	58.03
-27	689.0	750.0	815.8	23	52.03	53.74	55.45
-26	647.3	703.8	764.5	24	49.82	51.41	53.00
-25	608.5	660.8	716.9	25	47.72	49.19	50.67
-24	572.4	620.8	672.7	26	45.63	47.08	48.54
-23	538.8	583.6	631.6	27	43.65	45.07	46.51
-22	507.4	548.9	593.4	28	41.76	43.16	44.57
-21	478.1	516.6	557.7	29	39.96	41.34	42.73
-20	450.2	486.5	524.6	30	38.26	39.61	40.98
-19	425.2	458.3	493.6	31	36.63	37.96	39.30
-18	401.2	432.0	464.8	32	35.08	36.38	37.70
-17	378.9	407.4	437.8	33	33.61	34.88	36.18
-16	357.9	384.5	412.6	34	32.20	33.45	34.72
-15	338.3	362.9	389.1	35	30.86	32.09	33.33
-14	319.8	342.8	367.0	36	29.58	30.79	32.01
-13	302.6	323.9	346.4	37	28.37	29.54	30.74
-12	286.3	306.2	327.1	38	27.21	28.36	29.53
-11	271.1	289.6	309.0	39	26.10	27.23	28.38
-10	256.8	274.0	292.1	40	25.04	26.15	27.27
-9	243.3	259.3	276.2	41	24.04	25.11	26.22
-8	230.7	245.6	261.2	42	23.07	24.13	25.21
-7	218.8	232.6	247.2	43	22.15	23.19	24.24
-6	207.5	220.5	234.0	44	21.28	22.29	23.32
-5	197.0	209.0	221.6	45	20.44	21.42	22.44
-4	187.0	198.3	210.0	46	19.64	20.60	21.59
-3	177.6	188.1	199.0	47	18.87	19.81	20.78
-2	168.8	178.5	188.7	48	18.14	19.06	20.01
-1	160.4	169.5	179.0	49	17.44	18.34	19.27
0	152.5	161.0	169.8	50	16.77	17.65	18.56
1	145.1	153.0	161.2	51	16.13	16.99	17.88
2	138.0	145.4	153.1	52	15.52	16.36	17.22
3	131.4	138.3	145.4	53	14.94	15.75	16.60
4	125.1	131.5	138.1	54	14.38	15.17	16.00
5	119.1	125.1	131.3	55	13.84	14.62	15.43
6	113.5	119.1	124.8	56	13.33	14.09	14.88
7	108.1	113.4	118.7	57	12.83	13.58	14.35
8	103.1	108.0	113.0	58	12.36	13.09	13.84
9	98.30	102.8	107.5	59	11.91	12.62	13.35
10	93.76	98.00	102.3	60	11.48	12.17	12.89
11	89.46	93.42	97.46	61	11.06	11.74	12.44
12	85.38	89.07	92.84	62	10.66	11.32	12.01
13	81.51	84.95	88.46	63	10.28	10.93	11.60
14	77.84	81.05	84.32	64	9.917	10.54	11.20
15	74.35	77.35	80.39	65	9.567	10.18	10.82
16	71.04	73.83	76.67	66	9.230	9.827	10.45
17	67.90	70.50	73.14	67	8.907	9.489	10.10
18	64.91	67.34	69.79	68	8.597	9.165	9.763
19	62.07	64.33	66.62	69	8.299	8.854	9.438

temperature (℃)	minimum resistance(ksz)	middle resis-tance (kΩ)	Toplimit	temperature (℃)	maximal resistance(kΩ)	middle resis-tance (kΩ)	Toplimit
70	8.013	8.555	9.125	120	1.738	1.912	2.102
71	7.738	8.268	8.825	121	1.693	1.863	2.049
72	7.475	7.991	8.536	122	1.640	1.816	1.998
73	7.221	7.726	8.257	123	1.606	1.770	1.948
74	6.978	7.470	7.990	124	1.565	1.725	1.900
75	6.744	7.224	7.732	125	1.525	1.682	1.854
76	6.519	6.988	7.484	126	1.487	1.640	1.808
77	6.303	6.761	7.245	127	1.449	1.660	1.765
78	6.095	6.542	7.016	128	1.413	1.560	1.722
79	5.895	6.331	6.794	129	1.377	1.522	1.681
80	5.702	6.129	6.581	130	1.343	1.485	1.641
81	5.517	5.933	6.376				
82	5.339	5.746	6.178				
83	5.167	5.565	5.987				
84	5.002	5.390	5.803				
85	4.843	5.222	5.625				
86	4.690	5.060	5.455				
87	4.543	4.904	5.290				
88	4.401	4.754	5.131				
89	4.264	4.609	4.977				
90	4.132	4.469	4.829				
91	4.005	4.334	4.687				
92	3.882	4.204	4.549				
93	3.764	4.079	4.416				
94	3.650	3.958	4.287				
95	3.541	3.841	4.163				
96	3.435	3.728	4.043				
97	3.332	3.619	3.928				
98	3.234	3.514	3.816				
99	3.138	3.413	3.708				
100	3.046	3.315	3.603				
101	2.958	3.220	3.503				
102	2.872	3.129	3.405				
103	2.789	3.040	3.311				
104	2.709	2.955	3.219				
105	2.632	2.872	3.131				
106	2.557	2.792	3.046				
107	2.485	2.715	2.963				
108	2.416	2.640	2.883				
109	2.348	2.568	2.806				
110	2.283	2.498	2.731				
111	2.220	2.431	2.659				
112	2.159	2.365	2.589				
113	2.100	2.302	2.521				
114	2.044	2.241	2.455				
115	1.988	2.182	2.392				
116	1.935	2.124	2.330				
117	1.883	2.069	2.270				
118	1.833	2.015	2.212				
119	1.785	1.963	2.156				