Part Ⅰ : Technical Information

1. Summary

Indoor Unit

GKH(12)BB-K6DNA3A/I
GKH(18)BB-K6DNA3A/I

GKH(24)BC-K6DNA4A/I

Remote Controller

YT1F(MOTO)

Parameter		Unit	Value
Model			GKH(24)BC-K6DNA4A/I
Product Code			CN510N0140
Power Supply	Rated Voltage	V~	220-240
	Rated Frequency	Hz	50
	Phases		1
Cooling Capacity		KW	7.10
Heating Capacity		KW	8.0
Air flow volume(SH/H/M/L/SL)		m^3/h	1280/1220/1100/880/-
Dehumidifying Volume		L/h	2.5
Fan Type			Centrifugal
Fan Diameter-height		mm	Φ450-142
Fan Motor Cooling Speed(SH/H/M/L/SL)		rpm	650/620/560/450/-
Fan Motor Heating Speed(SH/H/M/L/SL)		rpm	650/620/560/460/-
Fan Motor Power Output		W	45
Fan motor running current		A	/
Fan Motor Capacitor		μF	/
Evaporator Material			Aluminum fin-copper tube
Evaporator Pipe Diameter		mm	Φ7
Evaporator Number of Rows-Fin Pitch		mm	2-1.5
Evaporator Length(L)XHeight(H)XWidth(W)		mm	1965X171.5X25.4
Fuse Current		A	5
Sound Pressure Level(SH/H/M/L/SL)		dB (A)	47/45/41/36/-
Sound Power Level(SH/H/M/L/SL)		dB (A)	58/56/52/47/-
Dimension of Outline(LXWXH)		mm	840X840X240
Dimension of Carton Box(LXWXH)		mm	960X960X310
Dimension of Package(LXWXH)		mm	963X963X325
Net Weight		kg	26
Gross Weight		kg	32
Liquid pipe		mm	Φ9.52
Gas Pipe(to indoor unit)		mm	Φ16

The above data is subject to change without notice. Please refer to the nameplate of the unit.

3. Outline Dimension Diagram

GKH(12)BB-K6DNA3A/I GKH(18)BB-K6DNA3A/I

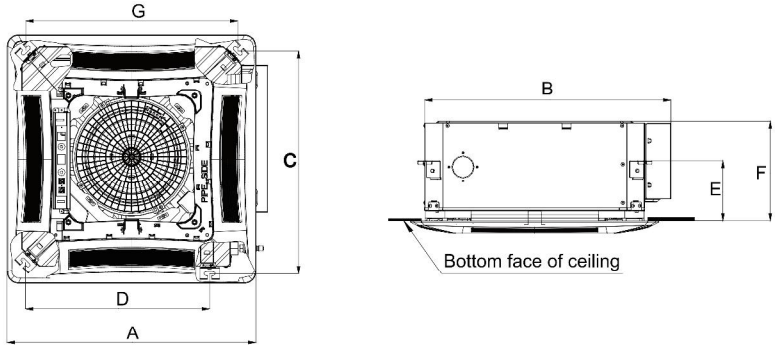

GKH(24)BC-K6DNA4A/I

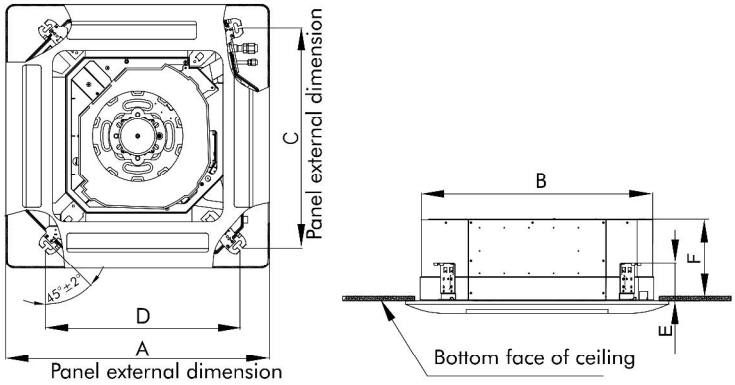

Unit:mm

Item / Model	A	B	C	D	E	F	G
GKH(12)BB-K6DNA3A/I	670	666	600	496	145	240	596
GKH(18)BB-K6DNA3A/I							
GKH(24)BC-K6DNA4A/I	950	840	780	680	145	240	-