1 Summary and features

Model	Remarks
GWCN07B6NK1CA GWHN07B6NK1CA GWCN09B6NK1CA GWHN09B6NK1CA	1PH 220～230V 50Hz R22
GWCN07B6NK3CA GWHN07B6NK3CA	1PH 230V 50Hz R410A

Model	Remarks
GWCN12B6NK1CA GWHN12B6NK1CA GWCN09B6NK3CA GWHN09B6NK3CA GWCN12B6NK3CA GWHN12B6NK3CA	1PH 220～230V 50Hz R22 1PH 230V 50Hz R410A
GWHN12B7NK1CA	1PH 230V～ 50Hz R22
GWCN12B7NK1CA	1PH 220-240V～ 50Hz R22
GWCN12B7NK3CA GWHN12B7NK3CA	1PH 220-240V～ 50Hz R410A

2 Specifications and technical parameters

Model		GWCN07B6NK1CA		GWHN07B6NK1CA	
Function		COOLING	HEATING	COOLING	HEATING
Rated Voltage		220-230～			
Rated Frequency		50HZ			
Total Capacity (W)		2000	/	2000	2200
Power Input (W) (High/Normal*)		800	/	800	860
Rated Input (W) (High/Normal*)		970	/	970	1000
Rated Current (A) (High/Normal *)		4.22	/	4.22	4.35
Air Flow Volume (m^3/h) (H/M/L)**		350			
Dehumidifying Volume (l/h)		1.2			
C.O.P / EER (W/W) (High/Normal*)		2.5	/	2.5	2.56
Energy Class		F	/	F	F
Indoor Unit	Model of Indoor Unit	GWCN07B6NK1CA/I		GWHN07B6NK1CA/I	
	Fan Motor Speed (r/min)	1015/915/815/730			
	Output of Fan Motor (w)	20			
	Input of Heater (w)	/			
	Fan Motor Capacitor (uF)	1			
	Fan Motor RLA(A)	0.17			
	Fan Type-Piece	Cross flow fan – 1			
	Diameter-Length (mm)	φ97 X 583			
	Evaporator	Aluminum fin-copper tube			
	Pipe Diameter (mm)	φ7			
	Row-Fin Gap(mm)	2-1.6			
	Coil lengthxheightxcoil width	576X230X25.4			
	Swing Motor Model	MP28EA			
	Output of Swing Motor (W)	2			
	Fuse (A)	PCB 3.15A Transformer 0.2A			
	Sound Pressure Level dB (A)	37/34/30/28			
	Sound Power Level dB (A)	47/44/40/38			
	Dimension (mm)	740 X202X250			
	Dimension of Package	790/275/325			
	Net Weight /Gross Weight	8/10			

Outdoor unit	Model of Outdoor Unit		GWCN07B6NE1EA/O	GWHN07B6NE1EA/O
	Compressor Manufacturer/trademark		MITSUBISHI	
	Compressor Model		KH145VFRA	
	Compressor Type		Rolling Piston Type	
	L.R.A. (A)		19	
	Compressor RLA(A)		3.9	
	Compressor Power Input(W)		850	
	Overload Protector		BF690-KB	
	Throttling Method		Capillary	
	Starting Method		Capacitor	
	Working Temp Range (℃)		18~43	-7~43
	Condenser		Aluminum fin-copper tube	
	Pipe Diameter (mm)		φ9.52	
	Rows-Fin Gap(mm)		1-1.6	
	Coil lengthxheightxcoil width		700X406X22	
	Fan Motor Speed (rpm)		950	
	Output of Fan Motor (W)		20	
	Fan Motor RLA(A)		0.4	
	Fan Motor Capacitor (uF)		1.5	
	Air Flow Volume of Outdoor Unit		1400	
	Fan Type-Piece		Axial fan – 1	
	Fan Diameter (mm)		φ320	
	Defrosting Method		Auto defrost	
	Climate Type		T1	
	Isolation		I	
	Moisture Protection		IP24	
	Permissible Excessive Operating Pressure for the Discharge Side(MPa)		2.5	
	Permissible Excessive Operating Pressure for the Suction Side(MPa)		0.6	
	Sound Pressure Level dB (A)		52	
	Sound Power Level dB (A)		62	
	Dimension (W/D/H)(mm)		660×320×428	
	Dimension of Package		765X350X490	
	Net Weight /Gross Weight		25/29	
	Refrigerant Charge (kg)		R22 0.73	R22 0.75
Connection Pipe	Length (m)		4	
	Gas additional charge(g/m)		25	
	Outer Diamete	Liquid Pipe (mm)	φ6	
		Gas Pipe (mm)	φ9.52	
	Max Distance	Height (m)	5	
		Length (m)	10	
Loading Quantity	20' Container		Interior Dimensions LXWXH：5898X2352X2393，Door Opening WXH：2343*2280	140
	40' Container		Interior Dimensions LXWXH：12032X2350X2390，Door Opening WXH：2343X2280	295
	40'High Cube Container		Interior Dimensions LXWXH：12032X2350X2697，Door Opening WXH：2338X2585	315

The technical data are subject to change without notice. Please refer to the nameplate of the unit.

Model		GWCN09B6NK1CA		GWHN09B6NK1CA	
Function		COOLING	HEATING	COOLING	HEATING
Rated Voltage		220-230～			
Rated Frequency		50HZ			
Total Capacity (W)		2500	/	2500	2800
Power Input (W) (High/Normal*)		960	/	950	950
Rated Input (W) (High/Normal*)		1170	/	1170	1170
Rated Current (A) (High/Normal *)		5.09	/	5.09	5.09
Air Flow Volume (m^3/h) (H/M/L)**		380		380	
Dehumidifying Volume (l/h)		1.2			
C.O.P / EER (W/W) (High/Normal*)		2.6	/	2.63	2.95
Energy Class		E	/	E	D
Indoor Unit	Model of Indoor Unit	GWCN09B6NK1CA/I		GWHN09B6NK1CA/I	
	Fan Motor Speed (r/min)	1035/955/815/730			
	Output of Fan Motor (w)	20			
	Input of Heater (w)	/			
	Fan Motor Capacitor (uF)	1			
	Fan Motor RLA(A)	0.17			
	Fan Type-Piece	Cross flow fan – 1			
	Diameter-Length (mm)	φ97 X 583			
	Evaporator	Aluminum fin-copper tube			
	Pipe Diameter (mm)	φ7			
	Row-Fin Gap(mm)	2-1.6			
	Coil lengthxheightxcoil width	576X230X25.4			
	Swing Motor Model	MP28EA			
	Output of Swing Motor (W)	2			
	Fuse (A)	PCB 3.15A Transformer 0.2A			
	Sound Pressure Level dB (A)	37/34/30/28		37/34/30/28	
	Sound Power Level dB (A)	47/44/40/38		47/44/40/38	
	Dimension (mm)	740 X202X250			
	Dimension of Package	790/275/325			
	Net Weight /Gross Weight	8/10			

Outdoor unit	Model of Outdoor Unit		GWCN09B6NE1EA/O	GWHN09B6NE1EA/O
	Compressor Manufacturer/trademark		MITSUBISHI	
	Compressor Model		2P17S225ANA	RH174VHA C
	Compressor Type		Rolling Piston Type	
	L.R.A. (A)		18	
	Compressor RLA(A)		4.1	
	Compressor Power Input(W)		880	
	Overload Protector		MRAS98776	
	Throttling Method		Capillary	
	Starting Method		Capacitor	
	Working Temp Range (℃)		16~43	-7~43
	Condenser		Aluminum fin-copper tube	
	Pipe Diameter (mm)		φ9.52	
	Rows-Fin Gap(mm)		1-1.6	
	Coil lengthxheightxcoil width		700X406X22	
	Fan Motor Speed (rpm)		950	
	Output of Fan Motor (W)		20	
	Fan Motor RLA(A)		0.4	
	Fan Motor Capacitor (uF)		1.5	
	Air Flow Volume of Outdoor Unit		1400	
	Fan Type-Piece		Axial fan －1	
	Fan Diameter (mm)		φ320	
	Defrosting Method		Auto defrost	
	Climate Type		T1	
	Isolation		I	
	Moisture Protection		IP24	
	Permissible Excessive Operating Pressure for the Discharge Side(MPa)		2.5	
	Permissible Excessive Operating Pressure for the Suction Side(MPa)		0.6	
	Sound Pressure Level dB (A)		52	
	Sound Power Level dB (A)		62	
	Dimension (W/D/H)(mm)		660×320×428	
	Dimension of Package		765X350X490	
	Net Weight /Gross Weight		25/29	
	Refrigerant Charge (kg)		R22 0.68	R22 0.78
Connection Pipe	Length (m)		4	
	Gas additional charge(g/m)		25	
	Outer Diamete	Liquid Pipe (mm)	φ6	
		Gas Pipe (mm)	φ9.52	
	Max Distance	Height (m)	5	
		Length (m)	10	
Loading Quantity	20' Container		Interior Dimensions LXWXH：5898X2352X2393，Door Opening WXH：2343*2280	140
	40' Container		Interior Dimensions LXWXH：12032X2350X2390，Door Opening WXH：2343X2280	295
	40'High Cube Container		Interior Dimensions LXWXH：12032X2350X2697，Door Opening WXH：2338X2585	315

The technical data are subject to change without notice. Please refer to the nameplate of the unit.

Model		GWCN12B6NK1CA		GWHN12B6NK1CA	
Function		COOLING	HEATING	COOLING	HEATING
Rated Voltage		220-230～			
Rated Frequency		50HZ			
Total Capacity (W)		3200	/	3200	3600
Power Input (W) (High/Normal*)		1260	/	1280	1400
Rated Input (W) (High/Normal*)		1550	/	1550	1700
Rated Current (A) (High/Normal *)		6.74	/	6.74	7.39
Air Flow Volume (m^3/h) (H/M/L)**		470			
Dehumidifying Volume (l/h)		1.2			
C.O.P / EER (W/W) (High/Normal*)		2.54	/	2.5	2.57
Energy Class		F	/	F	F
Indoor Unit	Model of Indoor Unit	GWCN12B6NK1CA/I		GWHN12B6NK1CA/I	
	Fan Motor Speed (r/min)	1160 / 1060 /960/860			
	Output of Fan Motor (w)	20			
	Input of Heater (w)	/			
	Fan Motor Capacitor (uF)	1			
	Fan Motor RLA(A)	0.17			
	Fan Type-Piece	Cross flow fan – 1			
	Diameter-Length (mm)	φ97 X 583			
	Evaporator	Aluminum fin-copper tube			
	Pipe Diameter (mm)	φ7			
	Row-Fin Gap(mm)	2-1.6			
	Coil lengthxheightxcoil width	576X230X25.4			
	Swing Motor Model	MP28EA			
	Output of Swing Motor (W)	2			
	Fuse (A)	PCB 3.15A Transformer 0.2A			
	Sound Pressure Level dB (A)	40/37/35/33			
	Sound Power Level dB (A)	50/47/45/43			
	Dimension (mm)	740 X202X250			
	Dimension of Package	790/275/325			
	Net Weight /Gross Weight	8/10			

Outdoor unit	Model of Outdoor Unit		GWCN12B6NE1EA/O	GWHN12B6NE1EA/O
	Compressor Manufacturer/trademark		GREE	
	Compressor Model		QX-222uB030g	
	Compressor Type		Rolling Piston Type	
	L.R.A. (A)		30	
	Compressor RLA(A)		5.7	
	Compressor Power Input(W)		1220	
	Overload Protector		B260-150A-141E	
	Throttling Method		Capillary	
	Starting Method		Capacitor	
	Working Temp Range (℃)		16~43	-7~43
	Condenser		Aluminum fin-copper tube	
	Pipe Diameter (mm)		φ9.52	
	Rows-Fin Gap(mm)		1-1.6	
	Coil lengthxheightxcoil width		750X508X25.4	
	Fan Motor Speed (rpm)		850	
	Output of Fan Motor (W)		30	
	Fan Motor RLA(A)		0.45	
	Fan Motor Capacitor (uF)		3	
	Air Flow Volume of Outdoor Unit		1800	
	Fan Type-Piece		Axial fan – 1	
	Fan Diameter (mm)		φ400	
	Defrosting Method		Auto defrost	
	Climate Type		T1	
	Isolation		I	
	Moisture Protection		IP24	
	Permissible Excessive Operating Pressure for the Discharge Side(MPa)		2.5	
	Permissible Excessive Operating Pressure for the Suction Side(MPa)		0.6	
	Sound Pressure Level dB (A)		53	
	Sound Power Level dB (A)		63	
	Dimension (W/D/H)(mm)		848X320X540	
	Dimension of Package		878X360X600	
	Net Weight /Gross Weight		35/40	
	Refrigerant Charge (kg)		R22 0.80	R22 0.87
Connection Pipe	Length (m)		4	
	Gas additional charge(g/m)		25	
	Outer Diamete	Liquid Pipe (mm)	φ6	
		Gas Pipe (mm)	φ12	
	Max Distance	Height (m)	5	
		Length (m)	10	
Loading Quantity	20' Container		Interior Dimensions LXWXH：5898X2352X2393，Door Opening WXH：2343*2280	100
	40' Container		Interior Dimensions LXWXH：12032X2350X2390，Door Opening WXH：2343X2280	210
	40'High Cube Container		Interior Dimensions LXWXH：12032X2350X2697，Door Opening WXH：2338X2585	275

The technical data are subject to change without notice. Please refer to the nameplate of the unit.

Model		GWCN07B6NK3CA		GWHN07B6NK3CA	
Function		COOLING	HEATING	COOLING	HEATING
Rated Voltage		230V～			
Rated Frequency		50HZ			
Total Capacity (W)		2100	/	2100	2250
Power Input (W) (High/Normal*)		645	/	645	655
Rated Input (W) (High/Normal*)		800	/	800	800
Rated Current (A) (High/Normal *)		3.48	/	3.48	3.48
Air Flow Volume (m^3/h) (H/M/L)**		460			
Dehumidifying Volume (l/h)		1.2			
C.O.P / EER (W/W) (High/Normal*)		3.26	/	3.26	3.44
Energy Class		B	/	B	A
Indoor Unit	Model of Indoor Unit	GWCN07B6NK3CA/I		GWHN07B6NK3CA/I	
	Fan Motor Speed (r/min)	1035/955/815/730			
	Output of Fan Motor (w)	20			
	Input of Heater (w)	/			
	Fan Motor Capacitor (uF)	1			
	Fan Motor RLA(A)	0.17			
	Fan Type-Piece	Cross flow fan – 1			
	Diameter-Length (mm)	φ97 X 583			
	Evaporator	Aluminum fin-copper tube			
	Pipe Diameter (mm)	φ7			
	Row-Fin Gap(mm)	2-1.6			
	Coil lengthxheightxcoil width	576X230X25.4			
	Swing Motor Model	MP28EA			
	Output of Swing Motor (W)	2			
	Fuse (A)	PCB 3.15A Transformer 0.2A			
	Sound Pressure Level dB (A)	37、34、30、28			
	Sound Power Level dB (A)	47、44、40、38			
	Dimension (mm)	740 X202X250			
	Dimension of Package	790/275/325			
	Net Weight /Gross Weight	8/10			

Outdoor unit	Model of Outdoor Unit		GWCN07B8NK3BA/O	GWHN07B8NK3BA/O
	Compressor Type		Scroll compressor	
	L.R.A. (A)		17	
	Compressor RLA(A)		3.1	
	Compressor Power Input(W)		702	
	Overload Protector		MRA12009-9201	
	Throttling Method		Capillary	
	Starting Method		Capacitor	
	Working Temp Range (℃)		16~43	-7~43
	Condenser		Aluminum fin-copper tube	
	Pipe Diameter (mm)		φ9.52	
	Rows-Fin Gap(mm)		2-1.4	
	Coil lengthxheightxcoil width		700X406X44	
	Fan Motor Speed (rpm)		950	
	Output of Fan Motor (W)		20	
	Fan Motor RLA(A)		0.09	
	Fan Motor Capacitor (uF)		1.5	
	Air Flow Volume of Outdoor Unit		/	
	Fan Type-Piece		Axial fan －1	
	Fan Diameter (mm)		φ320	
	Defrosting Method		Auto defrost	
	Climate Type		T1	
	Isolation		I	
	Moisture Protection		IP24	
	Permissible Excessive Operating Pressure for the Discharge Side(MPa)		3.8	
	Permissible Excessive Operating Pressure for the Suction Side(MPa)		1.2	
	Sound Pressure Level dB (A)		52	
	Sound Power Level dB (A)		62	
	Dimension (W/D/H)(mm)		660X260X430	
	Dimension of Package		765X350 X490	
	Net Weight /Gross Weight		28/32	
	Refrigerant Charge (kg)		R410A 0.87	R410A 0.88
Connection Pipe	Length (m)		4	
	Gas additional charge(g/m)		25	
	Outer Diamete	Liquid Pipe (mm)	φ6	
		Gas Pipe (mm)	φ9.52	
	Max Distance	Height (m)	5	
		Length (m)	10	
Loading Quantity	20’ Container		Interior Dimensions LXWXH：5898X2352X2393，Door Opening WXH：2343*2280	140
	40’ Container		Interior Dimensions LXWXH：12032X2350X2390，Door Opening WXH：2343X2280	295
	40’High Cube Container		Interior Dimensions LXWXH：12032X2350X2697，Door Opening WXH：2338X2585	315

The technical data are subject to change without notice. Please refer to the nameplate of the unit.

Model		GWCN09B6NK3CA		GWHN09B6NK3CA	
Function		COOLING	HEATING	COOLING	HEATING
Rated Voltage		230V～			
Rated Frequency		50HZ			
Total Capacity (W)		2600	/	2500	2700
Power Input (W) (High/Normal*)		750	/	730	760
Rated Input (W) (High/Normal*)		900	/	900	970
Rated Current (A) (High/Normal *)		3.91	/	3.91	4.22
Air Flow Volume (m^3/h) (H/M/L)**		520			
Dehumidifying Volume (l/h)		1.2			
C.O.P / EER (W/W) (High/Normal*)		3.47	/	3.42	3.55
Energy Class		A	/	A	B
Indoor Unit	Model of Indoor Unit	GWCN09B6NK3CA/I		GWHN09B6NK3CA/I	
	Fan Motor Speed (r/min)	1160/1060/960/860			
	Output of Fan Motor (w)	20			
	Input of Heater (w)	/			
	Fan Motor Capacitor (uF)	1			
	Fan Motor RLA(A)	0.17			
	Fan Type-Piece	Cross flow fan – 1			
	Diameter-Length (mm)	φ97 X 583			
	Evaporator	Aluminum fin-copper tube			
	Pipe Diameter (mm)	φ7			
	Row-Fin Gap(mm)	2-1.6		2-1.4	
	Coil lengthxheightxcoil width	576X230X25.4			
	Swing Motor Model	MP28EA			
	Output of Swing Motor (W)	2			
	Fuse (A)	PCB 3.15A Transformer 0.2A			
	Sound Pressure Level dB (A)	40、37、35、33			
	Sound Power Level dB (A)	50、47、45、43			
	Dimension (mm)	740 X202X250			
	Dimension of Package	790/275/325			
	Net Weight /Gross Weight	8/10			

Outdoor unit	Model of Outdoor Unit		GWCN09B8NK3BA/O	GWHN09B8NK3BA/O
	Compressor Type		Scroll compressor	
	L.R.A. (A)		17	
	Compressor RLA(A)		3.8	
	Compressor Power Input(W)		810	
	Overload Protector		MRA98635-9201	
	Throttling Method		Capillary	
	Starting Method		Capacitor	
	Working Temp Range (℃)		16~43	-7~43
	Condenser		Aluminum fin-copper tube	
	Pipe Diameter (mm)		φ9.52	
	Rows-Fin Gap(mm)		2-1.4	
	Coil lengthxheightxcoil width		750X508X44	
	Fan Motor Speed (rpm)		850	830
	Output of Fan Motor (W)		30	25
	Fan Motor RLA(A)		0.13	0.11
	Fan Motor Capacitor (uF)		2.5	
	Air Flow Volume of Outdoor Unit		/	
	Fan Type-Piece		Axial fan －1	
	Fan Diameter (mm)		φ400	
	Defrosting Method		Auto defrost	
	Climate Type		T1	
	Isolation		I	
	Moisture Protection		IP24	
	Permissible Excessive Operating Pressure for the Discharge Side(MPa)		3.8	
	Permissible Excessive Operating Pressure for the Suction Side(MPa)		1.2	
	Sound Pressure Level dB (A)		54	
	Sound Power Level dB (A)		64	
	Dimension (W/D/H)(mm)		848X320 X540	
	Dimension of Package		878X360 X590	
	Net Weight /Gross Weight		35/40	
	Refrigerant Charge (kg)		R410A 1.30	R410A 1.16
Connection Pipe	Length (m)		4	5
	Gas additional charge(g/m)		25	0
	Outer Diamete	Liquid Pipe (mm)	φ6	
		Gas Pipe (mm)	φ9.52	
	Max Distance	Height (m)	5	
		Length (m)	10	
Loading Quantity	20' Container		Interior Dimensions LXWXH：5898X2352X2393，Door Opening WXH：2343*2280	100
	40' Container		Interior Dimensions LXWXH：12032X2350X2390，Door Opening WXH：2343X2280	210
	40'High Cube Container		Interior Dimensions LXWXH：12032X2350X2697，Door Opening WXH：2338X2585	275

The technical data are subject to change without notice. Please refer to the nameplate of the unit.

Model		GWCN12B6NK3CA		GWHN12B6NK3CA	
Function		COOLING	HEATING	COOLING	HEATING
Rated Voltage		230V～			
Rated Frequency		50HZ			
Total Capacity (W)		3200	/	3200	3550
Power Input (W) (High/Normal*)		995	/	995	1210
Rated Input (W) (High/Normal*)		1280	/	1280	1210
Rated Current (A) (High/Normal *)		5.57	/	5.57	6.09
Air Flow Volume (m^3/h) (H/M/L)**		520			
Dehumidifying Volume (l/h)		1.2			
C.O.P / EER (W/W) (High/Normal*)		3.22	/	3.22	2.93
Energy Class		B	/	B	C
Indoor Unit	Model of Indoor Unit	GWCN12B6NK3CA/I		GWHN12B6NK3CA/I	
	Fan Motor Speed (r/min)	1160/1060/960/860			
	Output of Fan Motor (w)	20			
	Input of Heater (w)	/			
	Fan Motor Capacitor (uF)	1			
	Fan Motor RLA(A)	0.17			
	Fan Type-Piece	Cross flow fan – 1			
	Diameter-Length (mm)	φ97 X 583			
	Evaporator	Aluminum fin-copper tube			
	Pipe Diameter (mm)	φ7			
	Row-Fin Gap(mm)	2-1.6			
	Coil lengthxheightxcoil width	576X230X25.4			
	Swing Motor Model	MP28EA			
	Output of Swing Motor (W)	2			
	Fuse (A)	PCB 3.15A Transformer 0.2A			
	Sound Pressure Level dB (A)	40、37、35、33			
	Sound Power Level dB (A)	50、47、45、43			
	Dimension (mm)	740 X202X250			
	Dimension of Package	790/275/325			
	Net Weight /Gross Weight	8/10			

Outdoor unit	Model of Outdoor Unit		GWCN12B8NK3BA/O	GWHN12B8NK3BA/O
	Compressor Type		Scroll compressor	
	L.R.A. (A)		24	
	Compressor RLA(A)		5.25	
	Compressor Power Input(W)		1125	
	Overload Protector		B210-145-241E	
	Throttling Method		Capillary	
	Starting Method		Capacitor	
	Working Temp Range (℃)		16~43	-7~43
	Condenser		Aluminum fin-copper tube	
	Pipe Diameter (mm)		φ9.52	
	Rows-Fin Gap(mm)		2-1.4	
	Coil lengthxheightxcoil width		750X508X44	
	Fan Motor Speed (rpm)		850	
	Output of Fan Motor (W)		30	
	Fan Motor RLA(A)		0.13	
	Fan Motor Capacitor (uF)		2.5	
	Air Flow Volume of Outdoor Unit		/	
	Fan Type-Piece		Axial fan – 1	
	Fan Diameter (mm)		φ400	
	Defrosting Method		Auto defrost	
	Climate Type		T1	
	Isolation		I	
	Moisture Protection		IP24	
	Permissible Excessive Operating Pressure for the Discharge Side(MPa)		3.8	
	Permissible Excessive Operating Pressure for the Suction Side(MPa)		1.2	
	Sound Pressure Level dB (A)		54	
	Sound Power Level dB (A)		64	
	Dimension (W/D/H)(mm)		848X320 X540	
	Dimension of Package		878X360 X590	
	Net Weight /Gross Weight		35/40	
	Refrigerant Charge (kg)		R410A 1.35	R410A 1.30
Connection Pipe	Length (m)		4	
	Gas additional charge(g/m)		25	
	Outer Diamete	Liquid Pipe (mm)	φ6	
		Gas Pipe (mm)	φ9.52	
	Max Distance	Height (m)	5	
		Length (m)	10	
Loading Quantity	20' Container		Interior Dimensions LXWXH：5898X2352X2393，Door Opening WXH：2343*2280	100
	40' Container		Interior Dimensions LXWXH：12032X2350X2390，Door Opening WXH：2343X2280	210
	40'High Cube Container		Interior Dimensions LXWXH：12032X2350X2697，Door Opening WXH：2338X2585	275

The technical data are subject to change without notice. Please refer to the nameplate of the unit.

Model		GWCN12B7NK1CA	GWHN12B7NK1CA	
Function		COOLING	COOLING	HEATING
Rated Voltage		220-240V~	230V~	
Rated Frequency		50Hz	50Hz	
Total Capacity (W)		3500	3500 W	3850W
Power Input (W)		1300	1300	1380
Rated Input (W)		1600	1650	1650
Rated Current (A)		8.9	7.7	7.7
Air Flow Volume (m^3/h) (H/M/L)		500/440/380/320	500/440/380/320	
Dehumidifying Volume (l/h)		/	/	
EER / C.O.P (W/W)		2.6/-	2.65/2.80	
Energy Class		D	D	
Indoor unit	Model of Indoor Unit	GWCN12B7NK1CA /I	GWHN12B7NK1CA /I	
	Fan Motor Speed (r/min) (H/M/L)	1170/1060/990/930	1170/1060/990/930	
	Output of Fan Motor (w)	9	9	
	Input of Heater (w)	/	/	
	Fan Motor Capacitor (uF)	1	1	
	Fan Motor RLA(A)	0.155	0.155	
	Fan Type-Piece	Cross flow fan – 1	Cross flow fan – 1	
	Diameter-Length (mm)	φ99 X 644	φ99 X 644	
	Evaporator	Aluminum fin-copper tube	Aluminum fin-copper tube	
	Pipe Diameter (mm)	φ7	φ7	
	Row-Fin Gap(mm)	2-1.5	2-1.5	
	Coil length (l) x height (H) x coil width (L)	656X250X25.4	656X250X25.4	
	Swing Motor Model	MP24AA	MP24AA	
	Output of Swing Motor (W)	2	2	
	Fuse (A)	PCB 3.15A Transformer 0.2A	PCB 3.15A Transformer 0.2A	
	Sound Pressure Level dB (A) (H/M/L)	43/41/36/32	43/41/36/32	
	Sound Power Level dB (A) (H/M/L)	53/51/46/42	53/51/46/42	
	Dimension (L/W/H) (mm)	805/280/205	805/280/205	
	Dimension of Package (L/W/H) (mm)	860/355/280	860/355/280	
	Net Weight /Gross Weight (kg)	9/12	9/12	

Outdoor unit	Model of Outdoor Unit		GWCN12B7NK1EA/O	GWHN12B7NK1EA/O
	Compressor		zhuhai Landa/TOSOT	Shenyang Sanyo/SANYO
	Compressor Model		QX-23E030gA	C-RV232BH1AA
	Compressor Type		ROTARY	ROTARY
	L.R.A. (A)		32	34
	Compressor RLA(A)		6.4	6.2
	Compressor Power Input(W)		1270	1330
	Overload Protector		Internal	MRA99122-9201
	Throttling Method		Capillary	Capillary
	Starting Method		Capacitor	Capacitor
	Working Temp Range (℃)		18～43	–7 ～ 52
	Condenser		Aluminum fin-copper tube	Aluminum fin-copper tube
	Pipe Diameter (mm)		φ9.52	φ7
	Rows-Fin Gap(mm)		1-1.6	2-1.6
	Coil length (l) x height (H) x coil width (L)		608X508X210	608X495X210
	Fan Motor Speed (rpm)		850±20	850±20
	Output of Fan Motor (W)		30	30
	Fan Motor RLA(A)		0.45	0.42
	Fan Motor Capacitor (uF)		3	3
	Air Flow Volume of Outdoor Unit		/	/
	Fan Type-Piece		Axial fan –1	Axial fan –1
	Fan Diameter (mm)		φ400	φ400
	Defrosting Method		Auto defrost	Auto defrost
	Climate Type		T1	T1
	Isolation		I	I
	Moisture Protection		IP24	IP24
	Permissible Excessive		2.5	2.5
	Permissible Excessive		0.6	0.6
	Sound Pressure Level dB (A) (H/M/L)		56	56
	Sound Power Level dB (A) (H/M/L)		66	66
	Dimension (W/D/H)(mm)		848/320/540	848/320/540
	Dimension of Package		848/320/540	878/360/590
	Net Weight /Gross Weight (kg)		35/40	40/45
	Refrigerant Charge (kg)		R22/0.83	R22/1.1
Connection Pipe	Length (m)		3	3
	Gas additional charge(g/m)		25	25
	Outer Diameter	Liquid Pipe (mm)	φ6	φ6
		Gas Pipe (mm)	φ12	φ12
	Max Distance	Height (m)	5	5
		Length (m)	10	10

Model		GWCN12B7NK3CA	GWHN12B7NK3CA	
Function		COOLING	COOLING	HEATING
Rated Voltage		220-240V~	220-240V~	
Rated Frequency		50Hz	50Hz	
Total Capacity (W)		3500	3500	3850
Power Input (W)		1230	1200	1300
Rated Input (W)		1300	1300	1400
Rated Current (A)		5.5	5.5	6.1
Air Flow Volume (m^3/h) (H/M/L)		500/440/380/320	500/440/380/320	
Dehumidifying Volume (l/h)		/	/	
EER / C.O.P (W/W)		2.84/-	2.83/2.86	
Energy Class		D	D	
Indoor unit	Model of Indoor Unit	GWCN12B7NK3CA /I	GWHN12B7NK3CA /I	
	Fan Motor Speed (r/min) (H/M/L)	1170/1060/990/930	1170/1060/990/930	
	Output of Fan Motor (w)	9	9	
	Input of Heater (w)	/	/	
	Fan Motor Capacitor (uF)	1	1	
	Fan Motor RLA(A)	0.155	0.155	
	Fan Type-Piece	Cross flow fan – 1	Cross flow fan – 1	
	Diameter-Length (mm)	φ99 X 644	φ99 X 644	
	Evaporator	Aluminum fin-copper tube	Aluminum fin-copper tube	
	Pipe Diameter (mm)	φ7	φ7	
	Row-Fin Gap(mm)	2-1.5	2-1.5	
	Coil length (l) x height (H) x coil width (L)	656X250X25.4	656X250X25.4	
	Swing Motor Model	MP24AA	MP24AA	
	Output of Swing Motor (W)	2	2	
	Fuse (A)	PCB 3.15A Transformer 0.2A	PCB 3.15A Transformer 0.2A	
	Sound Pressure Level dB (A) (H/M/L)	43/41/36/32	43/41/36/32	
	Sound Power Level dB (A) (H/M/L)	53/51/46/42	53/51/46/42	
	Dimension (L/W/H) (mm)	805/280/205	805/280/180	
	Dimension of Package (L/W/H) (mm)	860/355/280	860/355/280	
	Net Weight /Gross Weight (kg)	9/12	9/12	

Outdoor unit	Model of Outdoor Unit		GWCN12B7NK3EA/O	GWHN12B7NK3EA/O
	Compressor		Shenyang Sanyo/SANYO	Shenyang Sanyo/SANYO
	Compressor Model		C-RV146H1A	C-RV146H1A
	Compressor Type		ROTARY	ROTARY
	L.R.A. (A)		39.8	39.8
	Compressor RLA(A)		5.6	5.6
	Compressor Power Input(W)		1000	1000
	Overload Protector		MRA98596-9201/B210-145-241E	MRA98596-9201/B210-145-241E
	Throttling Method		Capillary	Capillary
	Starting Method		Capacitor	Capacitor
	Working Temp Range (℃)		–7 ～ 52	–7 ～ 52
	Condenser		Aluminum fin-copper tube	Aluminum fin-copper tube
	Pipe Diameter (mm)		φ9.52	φ9.52
	Rows-Fin Gap(mm)		2-1.4	2-1.4
	Coil length (l) x height (H) x coil width (L)		614X508X210	614X508X210
	Fan Motor Speed (rpm)		900±20	900±20
	Output of Fan Motor (W)		48	48
	Fan Motor RLA(A)		0.55	0.55
	Fan Motor Capacitor (uF)		3	3
	Air Flow Volume of Outdoor Unit		/	/
	Fan Type-Piece		Axial fan –1	Axial fan –1
	Fan Diameter (mm)		φ400	φ400
	Defrosting Method		Auto defrost	Auto defrost
	Climate Type		T1	T1
	Isolation		I	I
	Moisture Protection		IP24	IP24
	Permissible Excessive Operating Pressure for the Discharge Side(MPa)		3.8	3.8
	Permissible Excessive Operating Pressure for the Suction Side(MPa)		1.2	1.2
	Sound Pressure Level dB (A) (H/M/L)		55	55
	Sound Power Level dB (A) (H/M/L)		65	65
	Dimension (W/D/H)(mm)		848/320/540	848/320/540
	Dimension of Package		878/360/590	878/360/590
	Net Weight /Gross Weight (kg)		40/44	40/44
	Refrigerant Charge (kg)		R410A/1.3	R410A/1.3
Connection Pipe	Length (m)		3	3
	Gas additional charge(g/m)		25	25
	Outer Diameter	Liquid Pipe	φ6	φ6
		Gas Pipe	φ12	φ12
	Max Distance	Height (m)	5	5
		Length (m)	10	10

The technical data are subject to change without notice. Please refer to the nameplate of the unit.

3 Parts Name

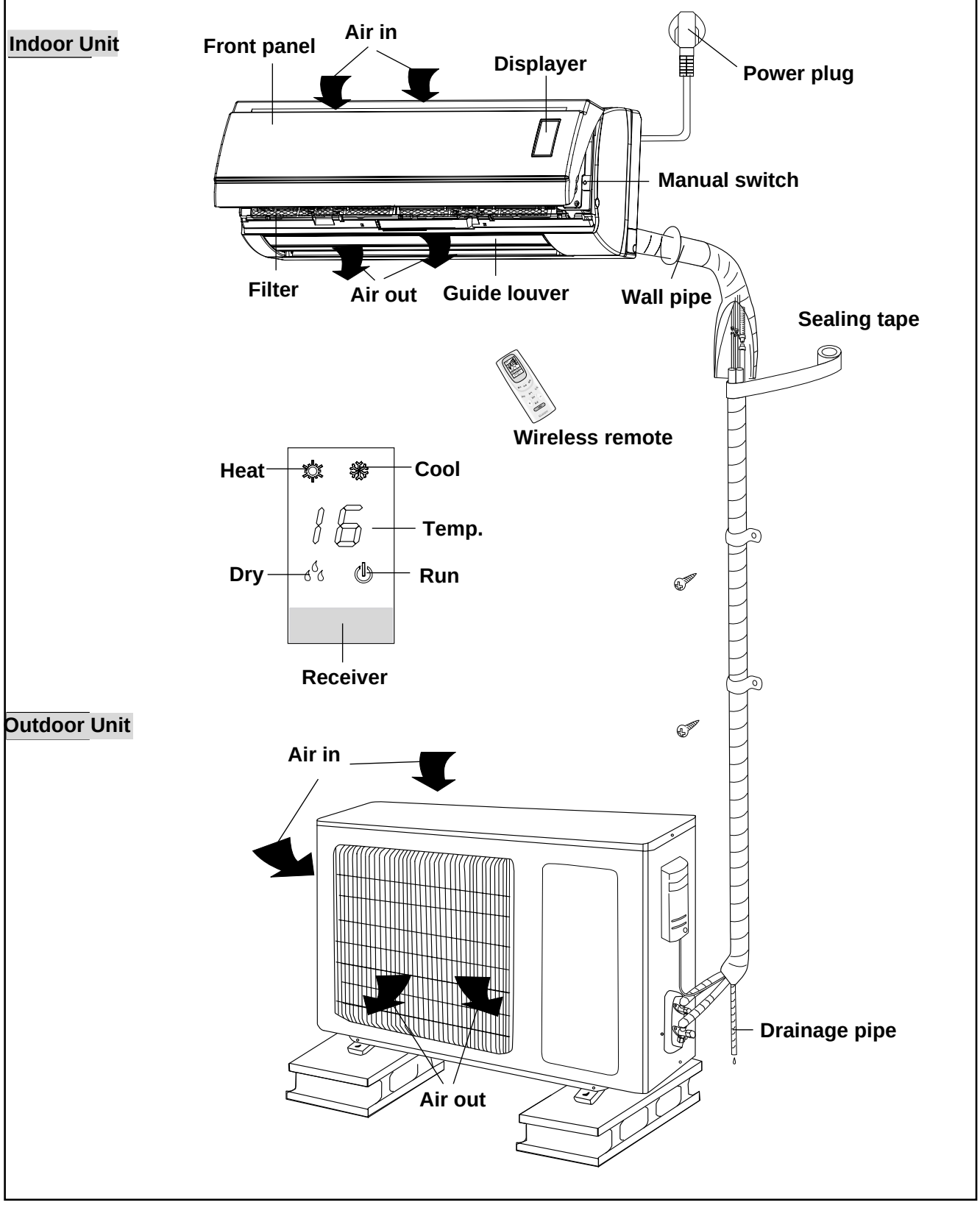
Indoor Unit
Front panel
Air in
Displayer
Power plug
Manual switch
Filter
Air out
Guide louver
Wall pipe
Sealing tape
Wireless remote
Heat
Cool
Temp.
Dry
Run
Receiver
Outdoor Unit
Air in
Drainage pipe
Air out

4 Outline and installation dimensions

4.1 Outline and installation dimensions of indoor unit

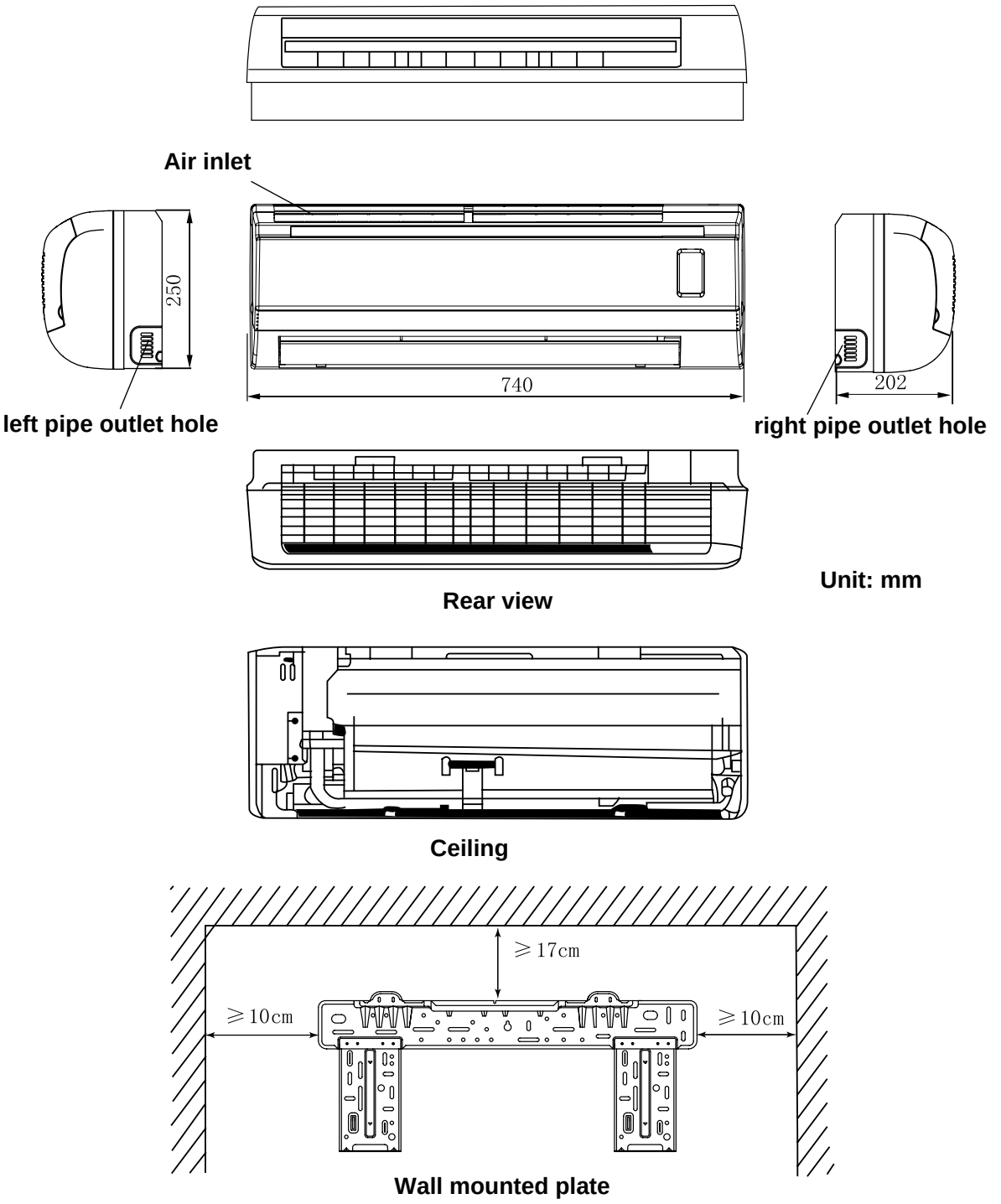

4.2 Outline and installation dimensions of outdoor unit

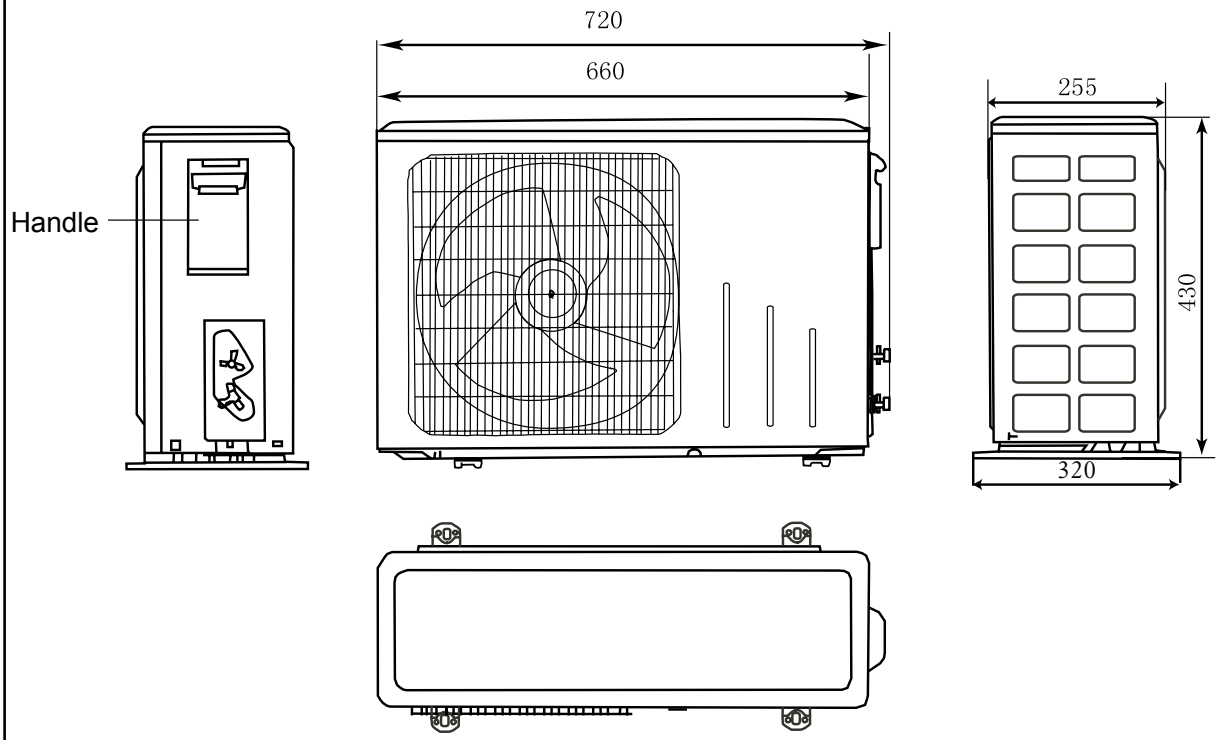

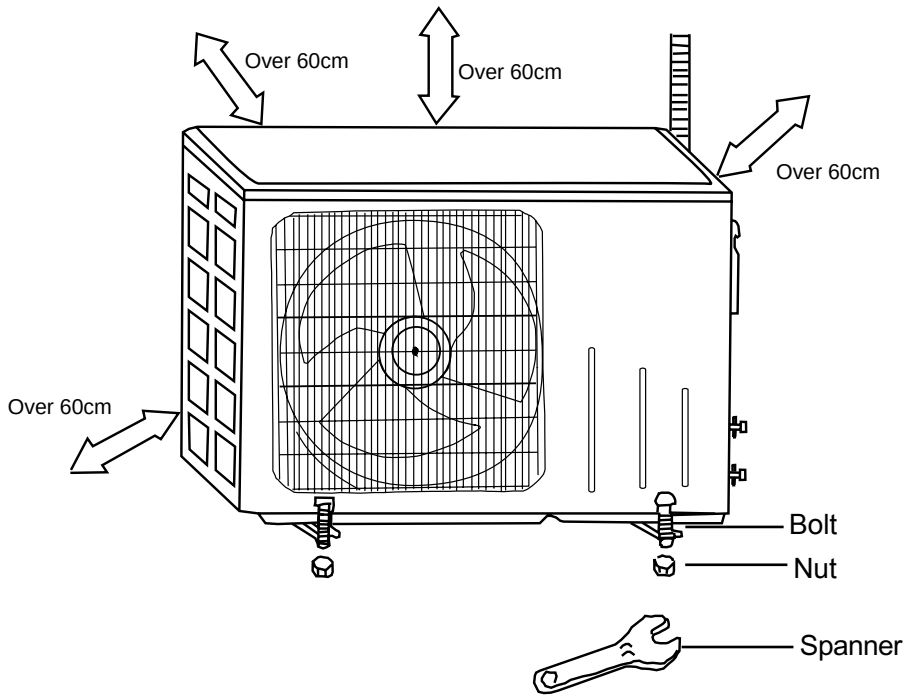

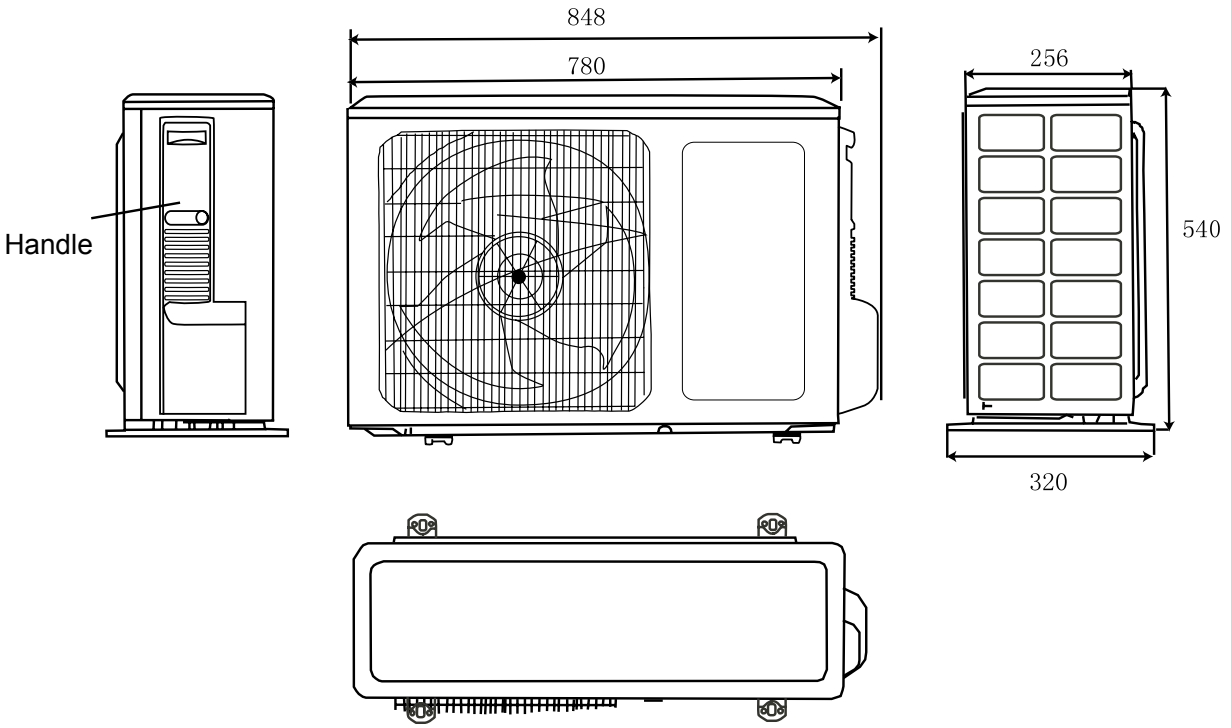
848
780
256
540
320
Handle

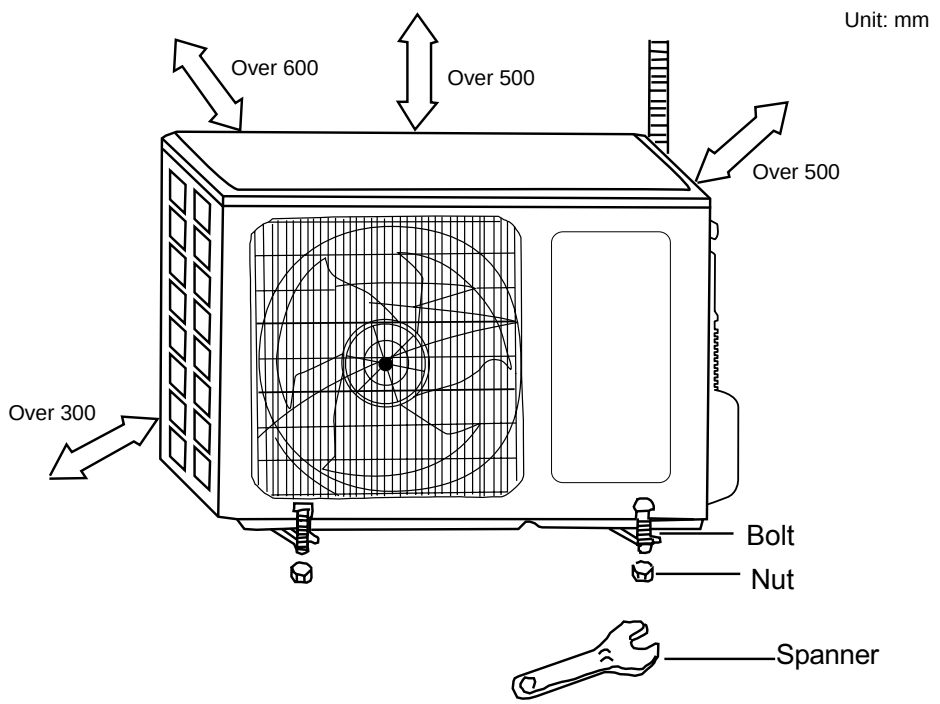
Unit: mm
Over 600
Over 500
Over 500
Over 300
Bolt
Nut
Spanner

6 Circuit diagram

GWCN07B6NK1CA GWCN09B6NK1CA GWCN12B6NK1CA

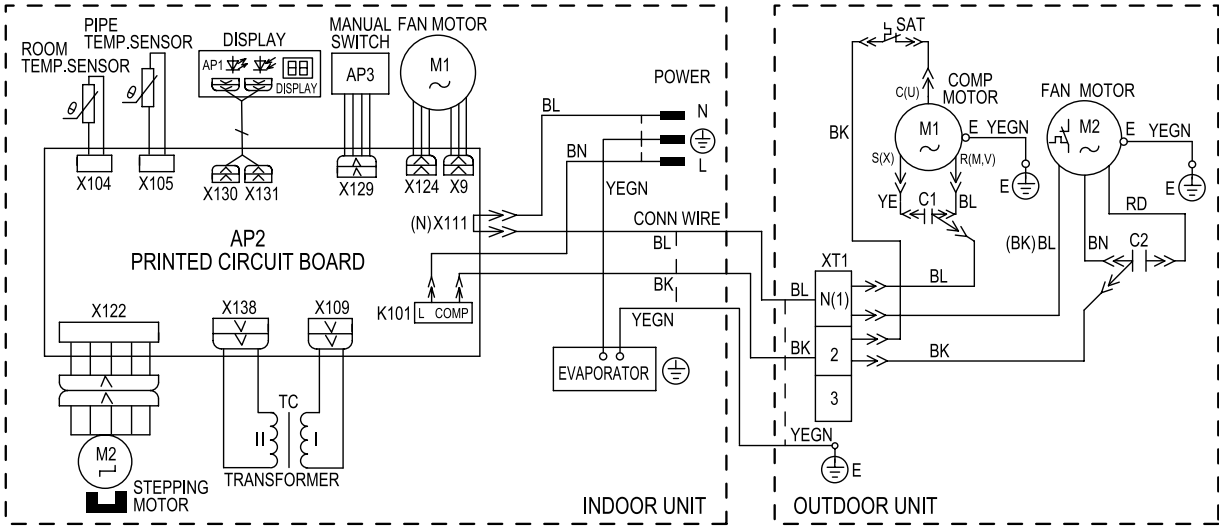

WHN07B6NK1CA GWHN12B6NK1CA

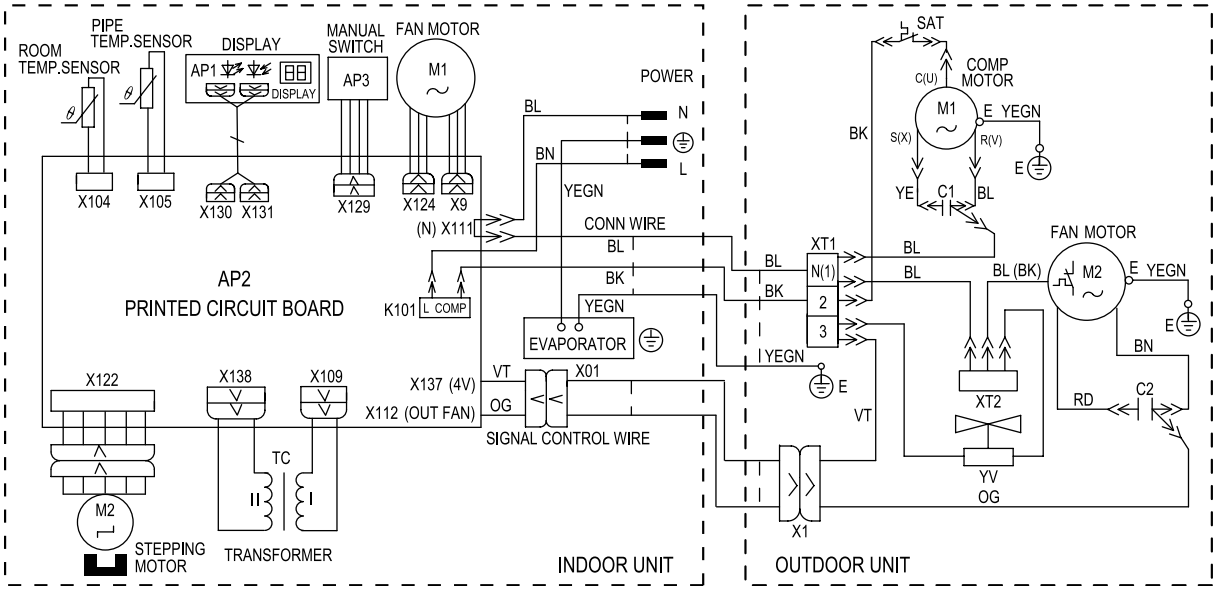

These circuit diagrams are subject to change without notice. Please refer to the ones stuck on the machines.

GWCN07B6NK3CA

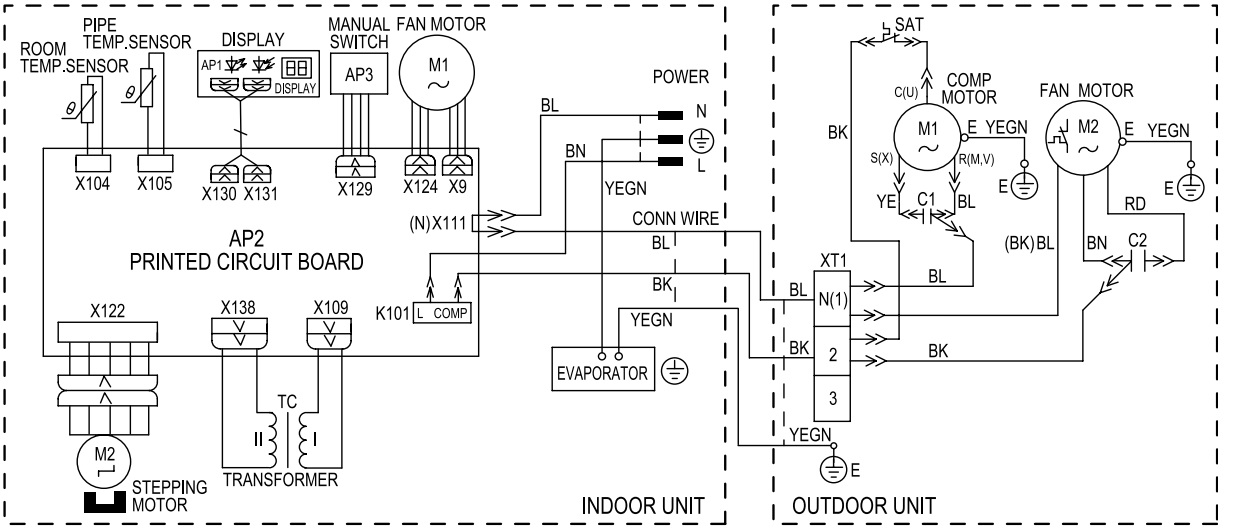

GWHN07B6NK3CA

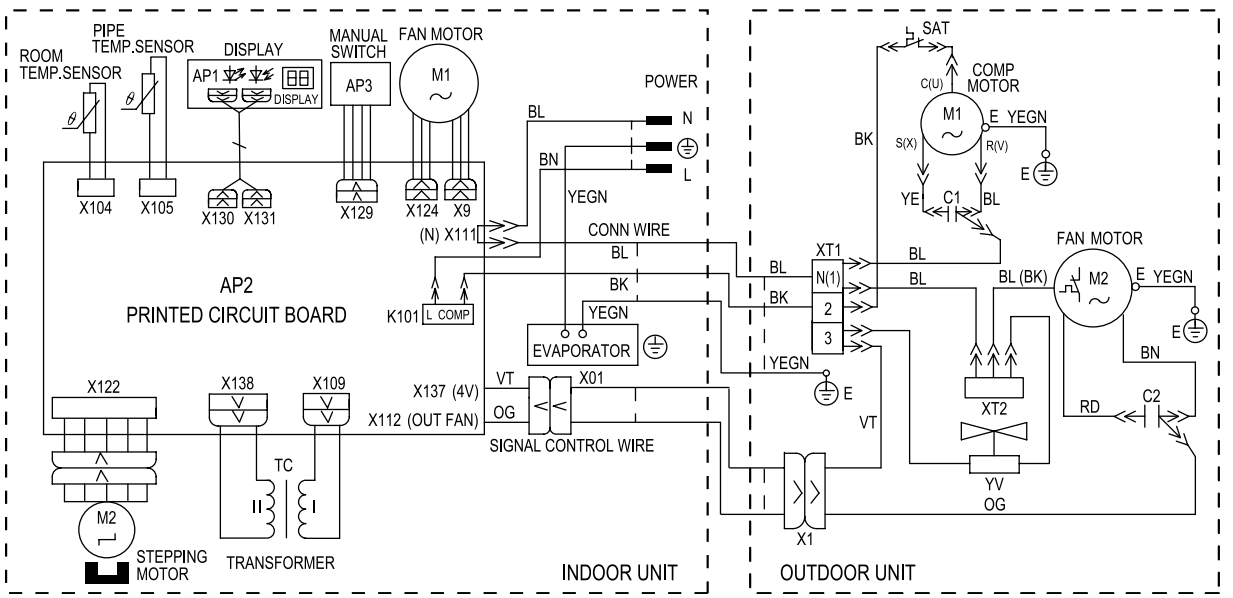

GWCN09B6NK3CA GWCN12B6NK3CA

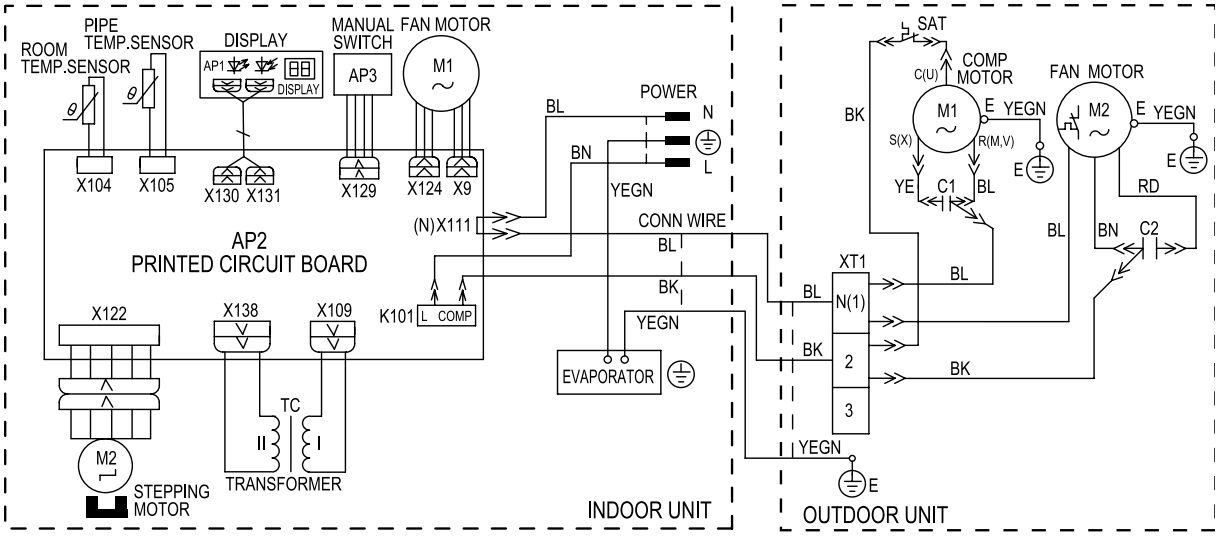

GWHN09B6NK3CA GWHN12B6NK3CA

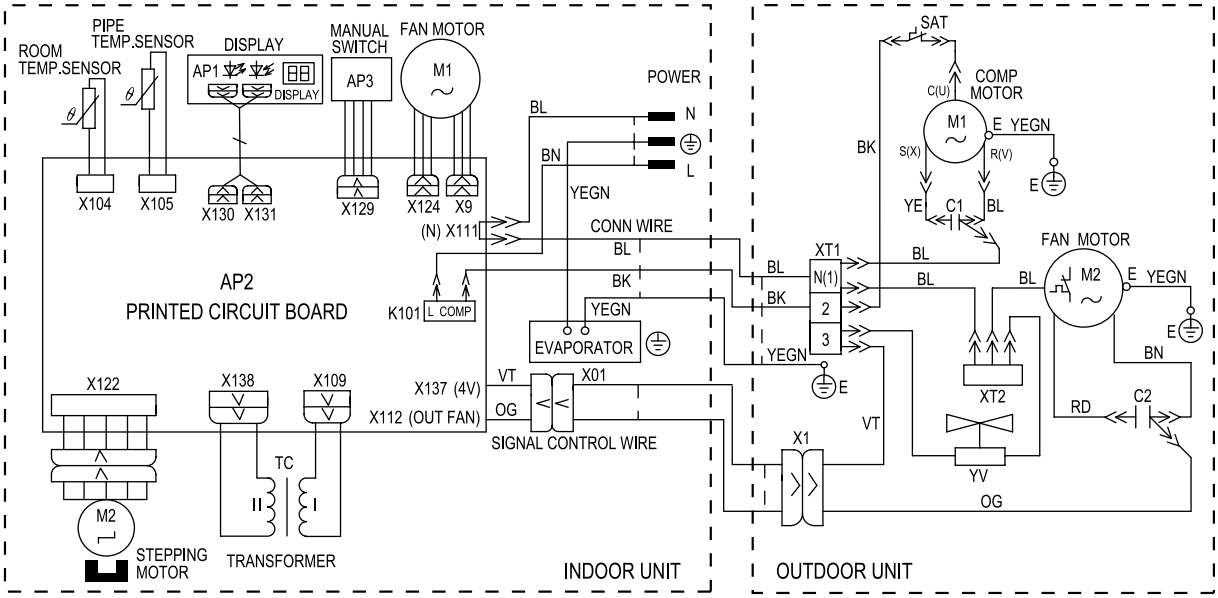

GWHNO9B6NK1CA

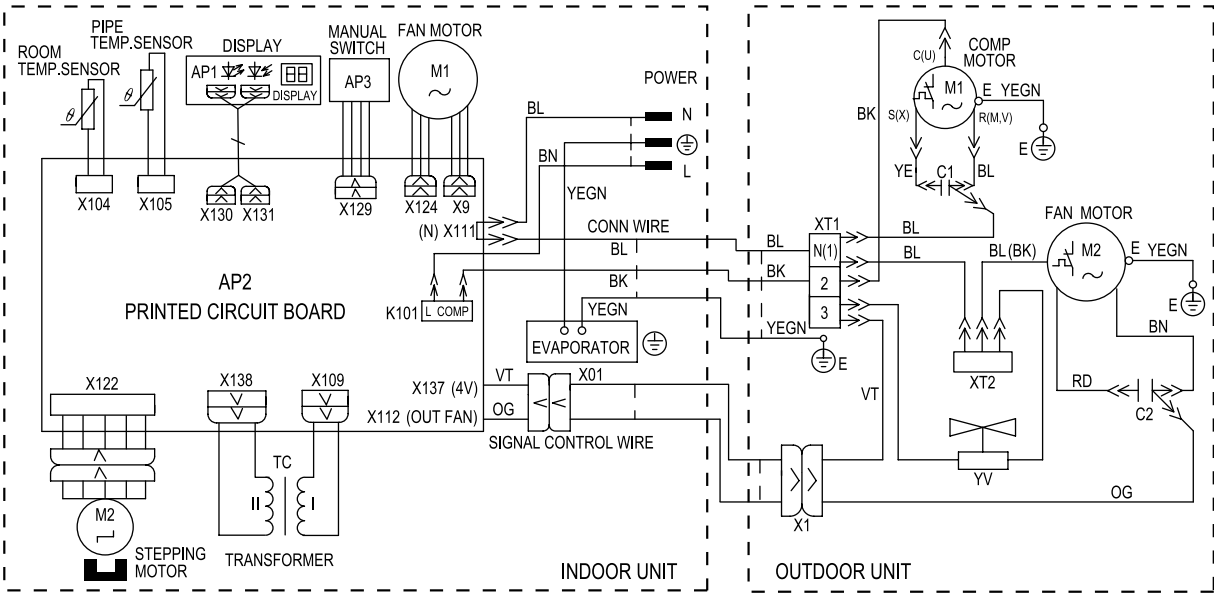

GWHN12B7NK1CA GWHN12B7NK3CA

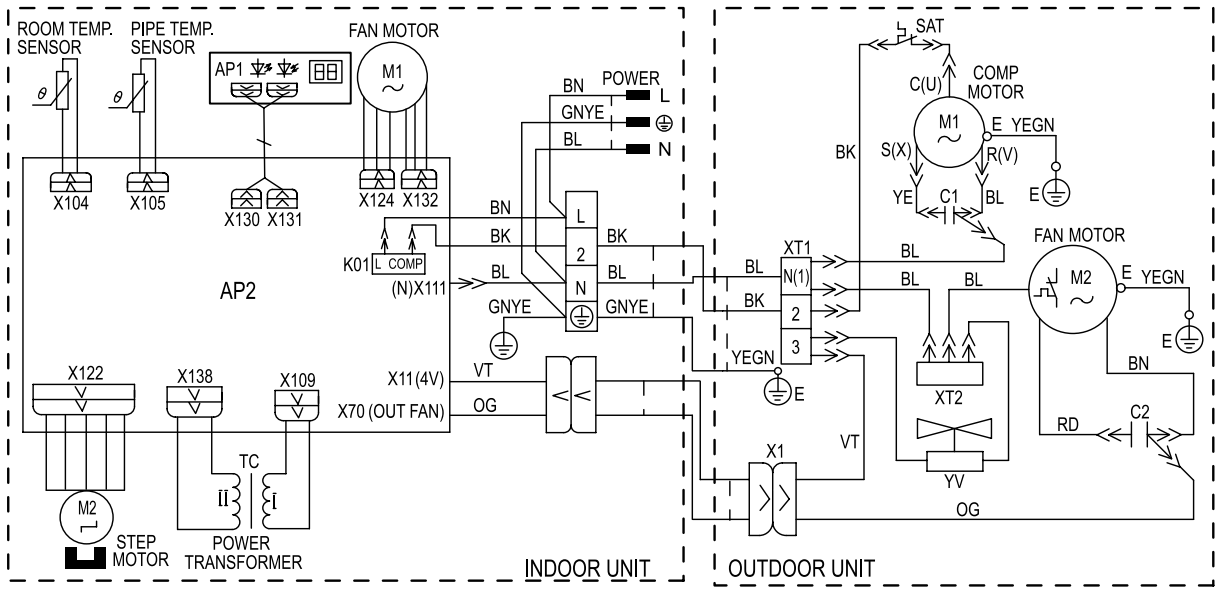

GWCN12B7NK1CA

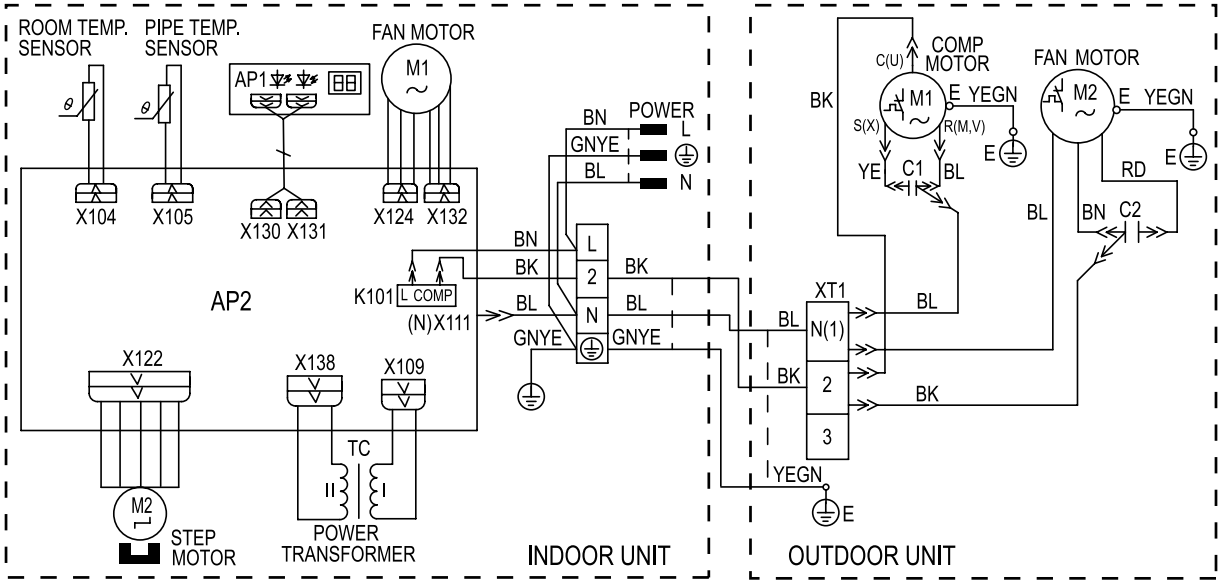

GWCN12B7NK3CA

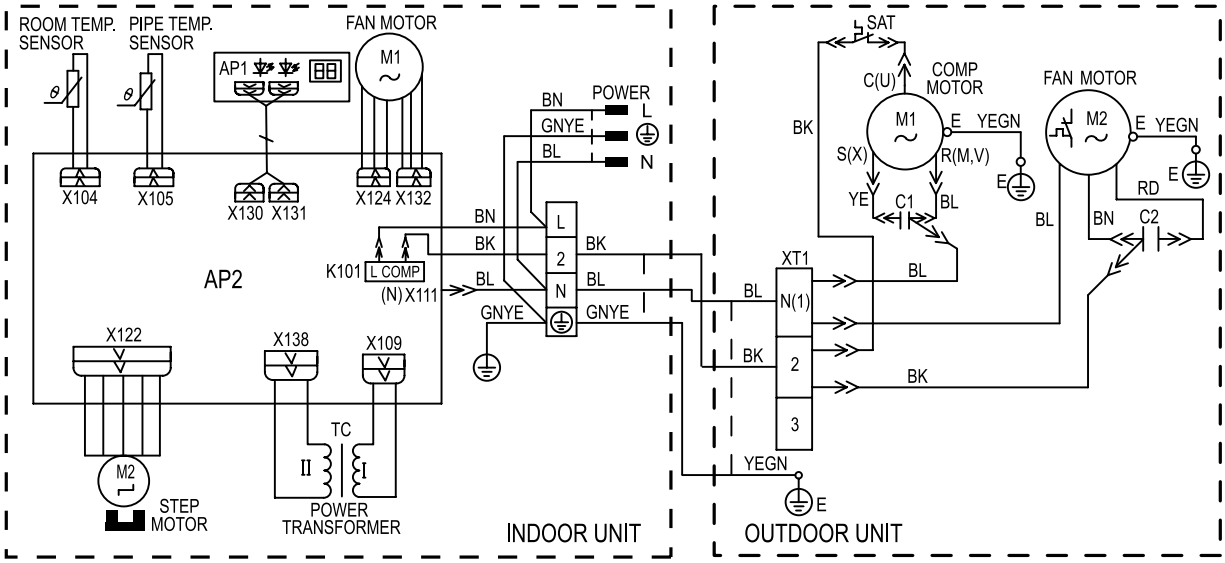

These circuit diagrams are subject to change without notice. Please refer to the ones stuck on the machines.

6 Manual of functions of remote controller and operation method

6.1 Manual 1 of functions of remote controller

6.1.1 Temperature parameter

◆**The room setting temperature(Tpreset)**

◆**The room ambient temperature (Tamb)**

6.1.2Basic Functions

Once energized, the compressor should in no way be restarted unless after 3-minute time interval at least. For the first energization, the compressor will be started without 3-minute lag. The compressor, once started,will not be stopped within 6 minutes with the change of room temperature.

6.1.2.1 **Cooling Mode**

6.1.2.1.1 **Cooling Conditions and Process**

When $T_{amb.} \geqslant T_{preset}$ +1℃, the unit will run under cooling mode, in which case the compressor and outdoor fan will start and the indoor fan will run at setting speed.

When $T_{amb.} \leq T_{preset}$ -1℃, the compressor and the outdoor fan will stop, the indoor fan will run at setting speed.

When T_{preset} -1℃<$T_{amb.}$< T_{preset} +1℃, the unit will maintain its original operating status.

➢ Under this mode, the switchover valve will not be powered on, and the setting temperature range is16 ~30℃ .

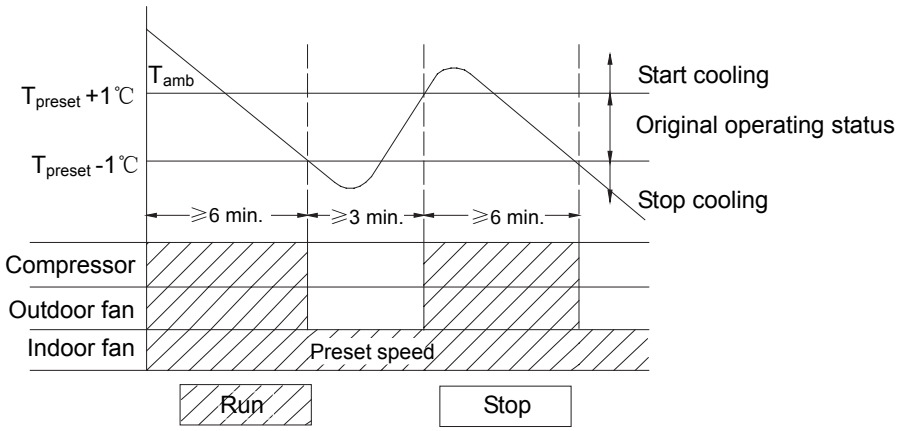

6.1.2.1.2 **Display**

The RUN and COOL indicator will be bright. Double 8 module indicator will display the setting temperature.

6.1.2.1.3 Protection

◆ **Antifreeze Protection**

If it is detected that the system is under antifreeze protection, the compressor and outdoor fan will be stopped, and the indoor fan will run at setting speed. When antifreeze protection is released and the compressor has stopped for 3 minutes, the unit will resume its original operating status.

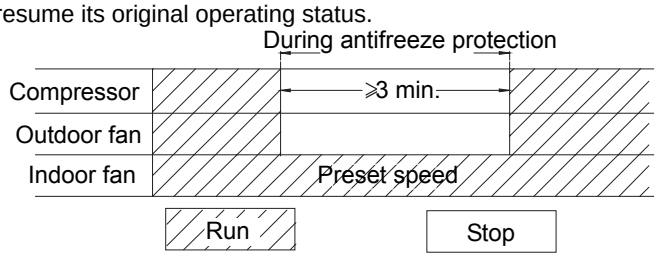

6.1.2.2 DRY Modes

6.1.2.2 .1 The conditions and process of DRY

When $T_{amb.}$> T_{preset} +2℃, the unit will run under DRY cooling mode, in which case the compressor and outdoor fan will be started and the indoor fan will run at low speed.

When T_{preset} -2℃≤$T_{amb.}$≤T_{preset} +2℃, the unit will run under DRY mode, in which case the indoor fan will keep run at low speed, the compressor and the outdoor fan will be stopped after 6 minutes . After 4 minutes,the compressor and the outdoor fan will be restarted. The dehumidifying process is so repeated in cycle.

When $T_{amb.}$< T_{preset}-2℃, the compressor and outdoor fan will be stopped, the indoor fan will run at low speed.

➢ Under this mode, the switchover valve will not be powered on, and the setting temperature range is16 ~30℃ .

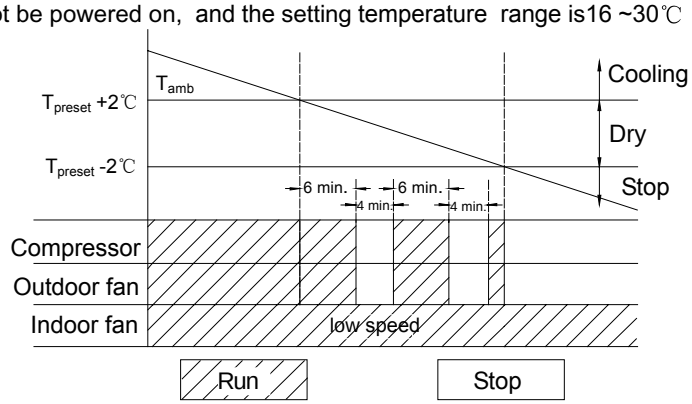

6.1.2.2.2 Display

The RUN and DRY indicator will be bright. Double 8 module indicator will display the setting temperature.

6.1.2.2.3 Protection

◆ **Antifreeze Protection**

Upon meeting the cooling condition, if it is detected that the system is under antifreeze protection, the compressor and outdoor fan will be stopped,and the indoor fan will run at low speed. When antifreeze protection is released and the compressor has stopped for 3 minutes, the complete unit will resume its original operating status.

Upon meeting the dehumidify condition, if it is detected that the system is under antifreeze protection, the com -pressor and outdoor fan will be stopped,and the indoor fan will run at low speed. When antifreeze protection is released and the compressor has stopped for 4 minutes, the complete unit will resume its original operating status.

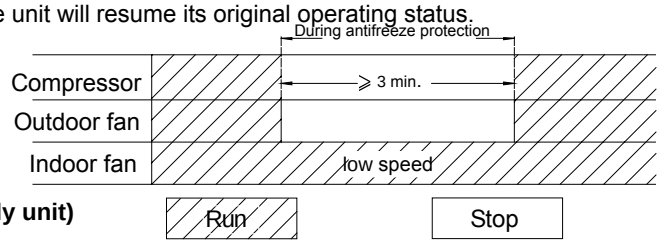

6.1.2.3 HEAT Mode (there is no this mode for cooling only unit)

6.1.2.3 .1The conditions and process of heating

When Tamb ≤ Tset +2 ℃ ,the system enters heating running, in this case, the reversal valve, compressor, outer fan enter simultaneously running.The indoor fan will delay at most for 2min to run.

When Tamb ≥ Tset +4℃,the compressor and outdoor fan will stop, but the reversal valve is still with power on, the indoor unit will run at setting fan speed for 60s then will stop .

When Tset +2 ℃<Tamb < Tset +4 ℃,the unit will maintain its original operating status.

➢ Under this mode, the switchover valve will be powered on, and the setting temperature range is16 ~30 ℃ .

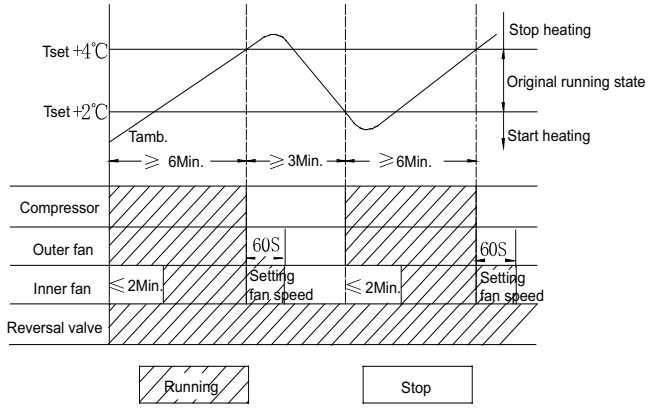

6.1.2.3.2 Display

The RUN and HEAT indicator will be bright. Double 8 module indicator will display the setting temperature.

6.1.2.3.3 Conditions and processes of defrost

When the condenser is detected to have frost, the system will enter into defrosting status, in which case the compressor will continue to run, the outdoor fan, 4-way valve and indoor fan will be stopped .When it is detected that the frost in condenser is completely eliminated, the outdoor fan, 4-way valve and indoor fan will be started, the compressor will keep running.

- The first defrost after energization will last 10 minutes. Later, the defrost time can be adjusted according to the quantity of frost. Defrost takes longer if more frost (Max. 12 minutes) and takes shorter if less frost (Min. 7.5 minutes). The system will exit defrost mode upon completion of defrosting.

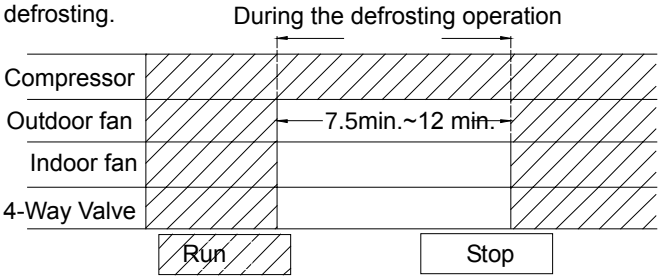

6.1.2.3.4 Protection

◆ **High Temp. Protection**

If it is detected that the evaporator tube temperature is too high, the outdoor fan will be stopped. When the tube temperature resumes to normal, the outdoor fan will be restarted.

◆ **Noise Silencing Protection:** If the unit is stopped by pressing ON/OFF, the reversal valve will be stopped after 2-minute lag; or 2 minutes will be delayed upon mode switching.

6.1.2.4 Fan mode

Under FAN mode, only the indoor fan runs at setting speed.The RUN indicator will be bright. Double 8 module indicator will display the setting temperature. When stand by, the power indicator is bright but the unit does not run.

6.1.2.5 Auto Mode

Under this mode, the system will automatically select its run mode (cool, dehumidify, heat or fan) with the change of ambient temperature. For protection function, same as under cooling and heating mode.

➢Display: At AUTO COOL mode,the RUN and COOL indicator will be bright, double 8 module indicator will display 25 ℃. At AUTO HEAT,the RUN and HEAT indicator will be bright, double 8 module indicator will display 20 ℃ At AUTO FAN,the RUN indicator will be bright, double 8 module indicator will display 25℃.

6.1.3 Other Control

6.1.3.1 Sleep Function

Setting SLEEP function under COOL or DEHUMIDIFY mode, the preset temperature will automatically rise by 1℃ after 1 hour and rise by another 1℃ after 2 hours. Preset temperature will rise by 2℃ in total within 2 hours. After that, the unit will run at this preset temperature.

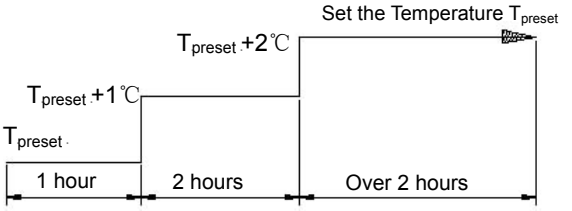

Setting SLEEP function under HEAT mode, the preset temperature will automatically decrease by 1℃ after 1hour and decrease by another 1℃after 2 hours. Preset temperature will decrease by 2 ℃ in total within 2 hours. After that, the unit will run at this preset temperature.

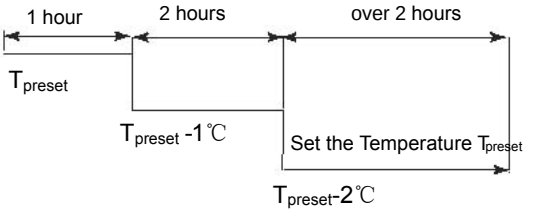

In AUTO mode, the setting temp. will not change.

6.1.3.2 Swing motor control

After powered on, the step motor firstly will turn the guide louver to A then turn to 0 position, to turn off the air outlet vent. After unit turned on, if it doesn't swing, heating will stop at D2 position, cooling will stop at D3 position.If the swing is started when in cool mode, it will swing between D1 and D3; when in heat mode, it will swing between L and D3; After turned off,it will turn to A, then turn to 0 position, and it will turn off the air outlet vent.

When indoor fan is stopped, the guide louver will be immediately stopped at current position.When the indoor fan is restarted, the guide louver will resume to swing.

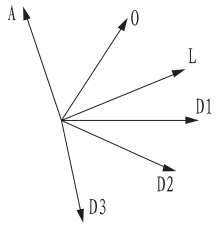

6.1.3.3 Buzzer

When the unit is energized or receives remote control signal or the auto key be pressed,, the buzzer will give out a beep.

6.1.3.4 Manual switch Auto, Test, Run, Stop function

When turn the manual switch to Auto step, it will run at auto mode; if there is remote control signal received, that will run in the remote control signal.

When turn the manual switch to Test step, the main unit will compel to run in COOL mode, the compressor, outer fan, swing motor will compel to run, inner fan will run at high fan speed; If there is sensor open circuit or short circuit detected by sensor, the buzzer will alarm.

If there is remote control signal, that the main unit will run at the remote control signal.

When turn the manaul switch to Run step, the main unit stand by , it will run in the received remote control signal.

When turn the manual switch to Stop step, the whole unit will stop and doesn't receive any remote control signal.

6.1.3.5 Display show

6.1.3.5.1 RUN indicator and MODE indicator

Once eneygized,all icon will display,and then only the power indicator is bright.When the unit is turned on by remote control, the RUN indicator and the mode indicator will be bright.Under the sleep mode or turn the light key off,only the RUN indicators is bright.When turn off the unit,only the power indicator is bright.The run indicator will blink when Defrosting.

6.1.3.5.2 Double 8 module indication

When turn on the unit, it will indicate the setting temperature (16~30℃). Under AUTO mode,when cooling and blowing , it will display 25 ℃ and it will display 20 ℃ when heating.Cooling only unti will only display 25℃ .

6.1.3.6 Auto fan speed control

In this mode, according to ambient temperature, indoor fan will select High,Middle and Low fan speed automatically with an interval of changing at leasts 3min and 30 s among the wind speeds.

6.1.3.7 DRY function

Under COOL and DRY mode(AUTO, HEAT and FAN mode don't have dry function),use remote control to set dry function on or off. When it is on, press the on/off key to turn off the unit, the indoor fan will run at low fan speed for 10min(during this 10min, only the swing runs at its original operating status), then the whole unit stop. when the dry function is set off, press the on/off key,the whole unit will stop immediately.

Under DRY mode, set dry function off, the indoor fan will stop immediately and the guide louver will be closed.

when the dry function is set on, there is "DRY" display on the remote control.

After power off, when power on,the dry function is set off.

When the remote control power on,the dry function is set off.

When the control on the split unit power on,the dry function is set off, unless it receive the signal to set on dry function from the remote control.

6.1.3.8 Super function

Under COOL and HEAT mode(AUTO, DRY and FAN mode don't have super function),press "SUPER" key on the remote control, there will be "SUPER" display on the remote control, the display of fan speed on the remote control doesn't change meanwhile the indoor fan runs at super high fan speed, another press to quit the super function, in this case, the "SUPER" on the remote control disappear,the indoor fan resume to run at setting wind speed.

At super function, press fan speed key,also quit the super function.

6.1.3.9 Memory function

Contents of memory: Mode before power off, Set fan speed, Set temperature,Timing, Swing, Super
There isn't memory of Sleep function.
When manual switch is on AUTO, TEST or STOP step,after power on,the unit will run according to the manual switch's mode.
When manual switch is on RUN,after power on,the unit will run at the mode before power off.
If memory is at the unit to start running state before power off,when power on, it has 3min delay protection.
If the manual switch is on TEST step before power off, when power on, it wil run at the mode before the "TEST " .

6.1.3.10 Timer function

The unit will automatically be turned on or off according to the timer set by the remote controller.

6.1.3.11 PG motor block control

1). The indoor fan is PG motor, during motor block protection, all loads stop(indoor fan,outdoor fan ,compressor etc.,the 4-way valve will stop after 2min delay, and the guide louver stop at current position).

2). In motor block protection, when the unit is running, the malfunction light will display block malfunction code " H6" and the power indicator is bright(it would not be controlled by the light key), other items will not display. when the unit is stop,the block malfunction code" H6" and the power indicator don't display.

3). In motor block protection, both the remote control receiving and pressing is available to turn on or turn off the unit, but does not for specific control(indoor fan,outdoor fan ,compressor etc.,the 4-way valve will stop after 2min delay, and the guide louver stop at current position).

4). Once the motor block protection act, it is need to power off the unit will resume to work.

6.2 Manual of functions of remote controller and operation method

This Function Manual is applicable to: GWCN12B7NK1CA GWHN12B7NK1CA GWCN12B7NK3CA GWHN12B7NK3CA

6.2.1 Temperature parameter

- ◆**The room setting temperature(Tpreset)**
- ◆**The room ambient temperature (Tamb)**

6.2.2Basic Functions

Once energized, the compressor should in no way be restarted unless after 3-minute time interval at least. For the first energization, the compressor will be started without 3-minute lag. The compressor, once started,will not be stopped within 6 minutes with the change of room temperature.

6.2.2.1 **Cooling Mode**

6.2.2.1.1 **Cooling Conditions and Process**

When $T_{amb.} \geqslant T_{preset}$ +1℃, the unit will run under cooling mode, in which case the compressor and outdoor fan will start and the indoor fan will run at setting speed.

When $T_{amb.} \leq T_{preset}$ -1℃, the compressor and the outdoor fan will stop, the indoor fan will run at setting speed.

When T_{preset} -1℃<$T_{amb.}$< T_{preset} +1℃, the unit will maintain its original operating status.

➢ Under this mode, the switchover valve will not be powered on, and the setting temperature range is16 ~30℃ .

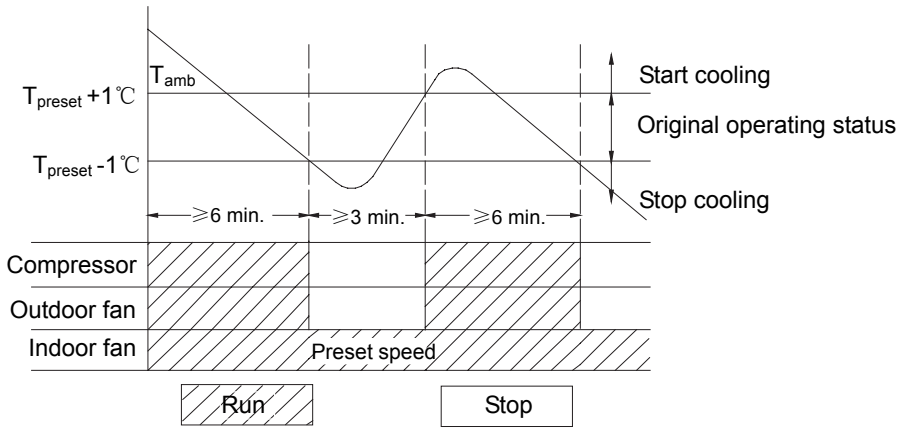

6.2.2.1.2 **Display**

The RUN and COOL indicator will be bright. Double 8 module indicator will display the setting temperature.

6.2.2.1.3 Protection

◆ **Antifreeze Protection**

If it is detected that the system is under antifreeze protection, the compressor and outdoor fan will be stopped, and the indoor fan will run at setting speed. When antifreeze protection is released and the compressor has stopped for 3 minutes, the unit will resume its original operating status.

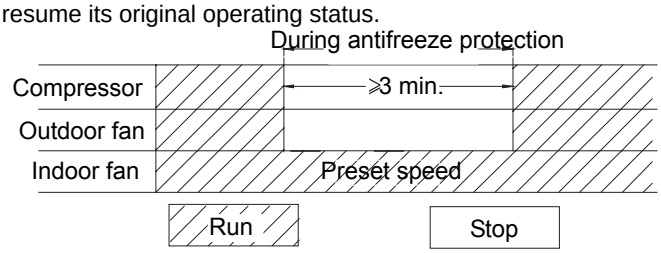

6.2.2.2 DRY Modes

6.2.2.2 .1 The conditions and process of DRY

When $T_{amb.}$> T_{preset} +2℃, the unit will run under DRY cooling mode, in which case the compressor and outdoor fan will be started and the indoor fan will run at low speed.

When T_{preset} -2℃≤$T_{amb.}$≤T_{preset} +2℃, the unit will run under DRY mode, in which case the indoor fan will keep run at low speed, the compressor and the outdoor fan will be stopped after 6 minutes . After 4 minutes,the compressor and the outdoor fan will be restarted. The dehumidifying process is so repeated in cycle.

When $T_{amb.}$< T_{preset}-2℃, the compressor and outdoor fan will be stopped, the indoor fan will run at low speed.

➢ Under this mode, the switchover valve will not be powered on, and the setting temperature range is16 ~30℃ .

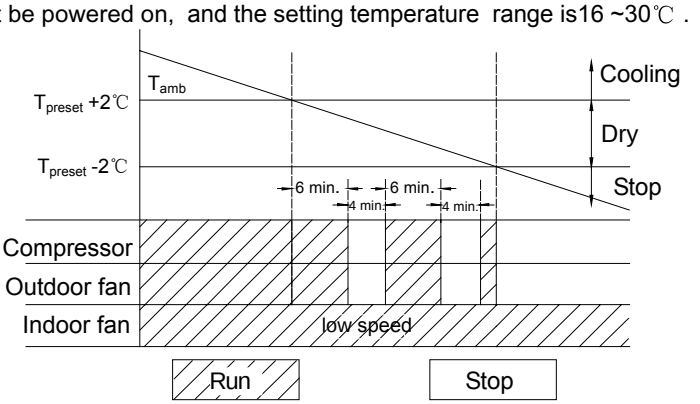

6.2.2.2.2 Display

The RUN and DRY indicator will be bright. Double 8 module indicator will display the setting temperature.

6.2.2.2.3 Protection

◆ **Antifreeze Protection**

Upon meeting the cooling condition, if it is detected that the system is under antifreeze protection, the compressor and outdoor fan will be stopped,and the indoor fan will run at low speed. When antifreeze protection is released and the compressor has stopped for 3 minutes, the complete unit will resume its original operating status.

Upon meeting the dehumidify condition, if it is detected that the system is under antifreeze protection, the com -pressor and outdoor fan will be stopped,and the indoor fan will run at low speed. When antifreeze protection is released and the compressor has stopped for 4 minutes, the complete unit will resume its original operating status.

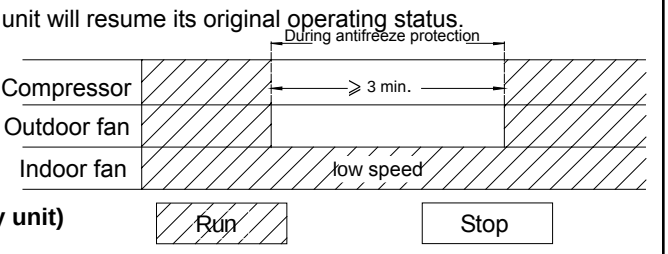

6.2.2.3 HEAT Mode (there is no this mode for cooling only unit)

6.2.2.3 .1The conditions and process of heating

When Tamb ≤ Tset +2 ℃ ,the system enters heating running, in this case, the reversal valve, compressor, outer fan enter simultaneously running.The indoor fan will delay at most for 2min to run.

When Tamb ≥ Tset +4℃,the compressor and outdoor fan will stop, but the reversal valve is still with power on, the indoor unit will run at setting fan speed for 60s then will stop .

When Tset +2 ℃<Tamb < Tset +4 ℃,the unit will maintain its original operating status.

➢ Under this mode, the switchover valve will be powered on, and the setting temperature range is16 ~30 ℃.

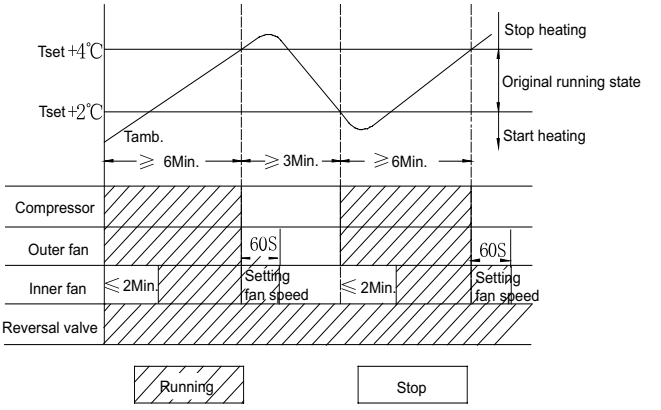

6.2.2.3.2 Defrosting Conditions and Process

When the condenser is detected to have frost, the system will enter into defrosting status, in which case the compressor will continue to run, the outdoor fan, 4-way valve and indoor fan will be stopped .When it is detected that the frost in condenser is completely eliminated, the outdoor fan and 4-way valve will be started,the indoor fan will be started 2mins

later,the compressor will keep running.

- The first defrost after energization will last 10 minutes. Later, the defrost time can be adjusted according to the quantity of frost. Defrost takes longer if more frost (Max. 12 minutes) and takes shorter if less frost (Min. 7 minutes). The system will exit defrost mode upon completion of defrosting.

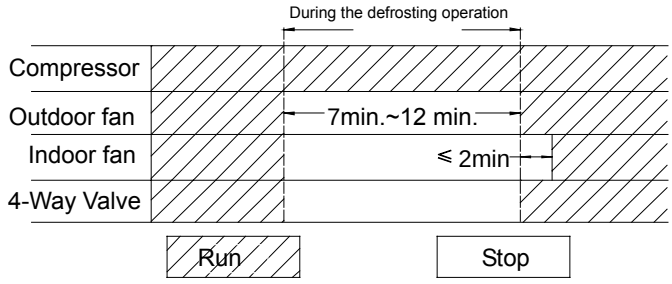

6.2.2.3.3 Display

The RUN and HEAT indicator will be bright. Double 8 module indicator will display the setting temperature.

6.2.2.3.4 Protection Functions

◆ **Anti-high temperature protection**

If it is detected that the evaporator tube temperature is too high, the outdoor fan will be stopped. When the tube temperature resumes to normal, the outdoor fan will be restarted.

◆ **Noise Silencing Protection**

If the unit is stopped by pressing ON/OFF, the switchover valve will be stopped after 2-minute lag; or 2 minutes will be delayed upon mode switching.

6.2.2.4 Fan mode

Under FAN mode, only the indoor fan runs at preset speed. The RUN indicator will be bright and double 8 indicator will display the setting temperature.

6.2.2.5 Auto Mode

Under this mode, the system will automatically select its run mode (cool, dehumidify, heat or fan) with the change of ambient temperature. For protection function, same as under cooling and heating mode.

➢Display: At AUTO COOL mode,the RUN and COOL indicator will be bright, double 8 module indicator will display 25 ℃. At AUTO HEAT,the RUN and HEAT indicator will be bright, double 8 module indicator will display 20 ℃ At AUTO FAN,the RUN indicator will be bright, double 8 module indicator will display 25℃.

6.2.3 Other Control

6.2.3.1 Sleep Function

Setting SLEEP function under COOL or DEHUMIDIFY mode, the preset temperature will automatically rise by 1℃ after 1 hour and rise by another 1℃ after 2 hours. Preset temperature will rise by 2℃ in total within 2 hours. After that, the unit will run at this preset temperature.

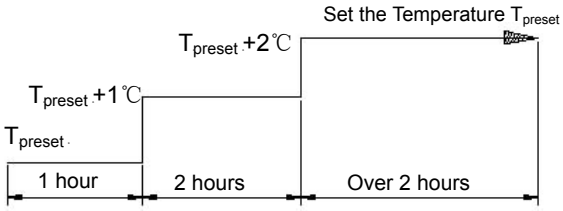

Setting SLEEP function under HEAT mode, the preset temperature will automatically decrease by 1℃after 1hour and decrease by another 1℃after 2 hours. Preset temperature will decrease by 2 ℃ in total within 2 hours. After that, the unit will run at this preset temperature.

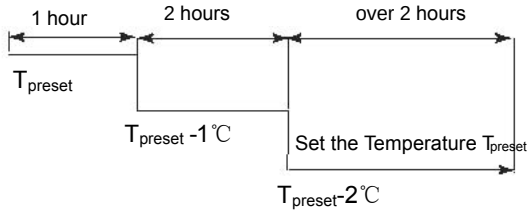

In AUTO mode, the setting temp. will not change.

6.1.3.2 Swing motor control

After powered on, the swing up/down motor will firstly rotate the guide louver to 0 position to close the air outlet vent. After unit is turned on, if to set the swing function,when the indoor fan stops running,the guide louver will stop at the current position at the same time,when the indoor fan is running, the guide louver will resume to swing state. From the COOL,DRY FAN etc. mode change to HEAT mode, the guide louver will open to the heating mode initial D position, after the swing start,

it will run at the heating angle (A-D). When switch from the HEAT to the COOL,DRY or FAN mode,the guide louver will open to the cooling mode initial B position, if the swing start,it will run at the cooling angle(A-C).

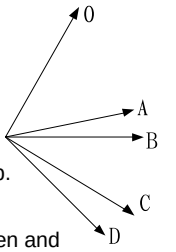

6.2.3.3 Buzzer

When the unit is energized or receives remote control signal or the auto key be pressed,, the buzzer will give out a beep.

6.2.3.4 AUTO key(on the main PCB)

When press this key,the unit will run at AUTO mode, the indoor fan will run at auto wind speed, the guide louver will open and swing,another press to turn off the unit.

6.2.3.5 Display show

6.2.3.5.1 RUN indicator and MODE indicator

Once eneygized,all icon will display,and then only the power indicator is bright.When the unit is turned on by remote control, the RUN indicator and the mode indicator will be bright.Under the sleep mode or turn the light key off,only the RUN indicator is bright.When turn off the unit,only the power indicator is bright.The run indicator will blink when Defrosting.

6.2.3.5.2 Double 8 module indication

When turn on the unit, it will indicate the setting temperature (16~30℃). Under AUTO mode,when cooling and blowing , it will display 25 ℃ and it will display 20 ℃ when heating.Cooling only unti will only display 25℃ .

6.2.3.6 Auto fan speed control

In this mode, according to ambient temperature, indoor fan will select High,Middle and Low fan speed automatically with an interval of changing at leasts 3min and 30 s among the wind speeds.

6.2.3.7 DRY function

Under COOL and DRY mode(AUTO, HEAT and FAN mode don't have dry function),use remote control to set dry function on or off. When it is on, press the on/off key to turn off the unit, the indoor fan will run at low fan speed for 10min(during this 10min, only the swing runs at its original operating status), then the whole unit stop. when the dry function is set off, press the on/off key,the whole unit will stop immediately.

Under DRY mode, set dry function off, the indoor fan will stop immediately and the guide louver will be closed.

when the dry function is set on, there is "DRY" display on the remote control.

After power off, when power on,the dry function is set off.

When the remote control power on,the dry function is set off.

When the control on the split unit power on,the dry function is set off, unless it receive the signal to set on dry function from the remote control.

6.2.3.8 Super function

Under COOL and HEAT mode(AUTO, DRY and FAN mode don't have super function),press "SUPER" key on the remote control, there will be "SUPER" display on the remote control, the display of fan speed on the remote control doesn't change meanwhile the indoor fan runs at super high fan speed, another press to quit the super function, in this case, the "SUPER" on the remote control disappear,the indoor fan resume to run at setting wind speed.

At super function, press fan speed key,also quit the super function.

6.2.3.9 Memory function

When powered off and powered on again, the unit will run at the state before power-off.

Contents of memory: Mode before power off, Set fan speed, Set temperature,Timing, Swing, Super

There isn't memory of Sleep function.

6.2.3.10 Timer function

The unit will automatically be turned on or off according to the timer set by the remote controller.

6.2.3.11 PG motor block control

1). The indoor fan is PG motor, during motor block protection, all loads stop(indoor fan,outdoor fan ,compressor etc.,the 4-way valve will stop after 2min delay, and the guide louver stop at current position).

2). In motor block protection, when the unit is running, the malfunction light will display block malfunction code " H6" and the power indicator is bright(it would not be controlled by the light key), other items will not display. when the unit is stop,the block malfunction code" H6" and the power indicator don't display.

3). In motor block protection, both the remote control receiving and pressing is available to turn on or turn off the unit, but does not for specific control.

4). Once the motor block protection act, it is need to power off the unit will resume to work.

7 Disassembly Procedures

7. 1 Disassembling process of indoor unit

Operation procedures/pictures

7. 1. 1 Disassemble the front panel

Pull the panel open. And pull out the wiring terminal, pull the panel outward with force along the groove fixing the panel of the body case to remove the panel as shown in Fig. 7-1.

Fig. 7 — 1

7. 1. 2 Disassemble filter

Push the filter in the middle, to make the clasp out of the groove, then can take down the filter. As shown in Fig. 7-2.

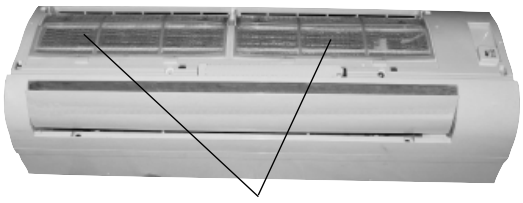

Fig. 7 — 2

7. 1. 3 Disassemble the guide louver

Bend the guide louver, then take it out. As shown in Fig. 7-3.

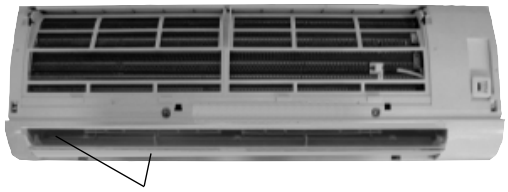

Fig.7 — 3

7.1.4 Disassemble the body case

Open the 4 screw caps at the panel and open the body case, pull out the movable latch at the panel board with hand and then pull it backwards to disassemble the panel as shown in Fig.7-4

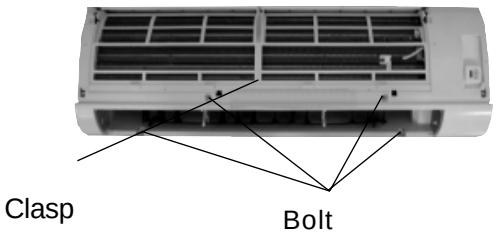

Fig 7－4

7.1.5 Disassemble electric box

Loosen one screw which fixing the electric box cover and indicator holder, then loosen the clasp of backside, then can disassemble the electric box cover. As shown in Fig. 7-5.

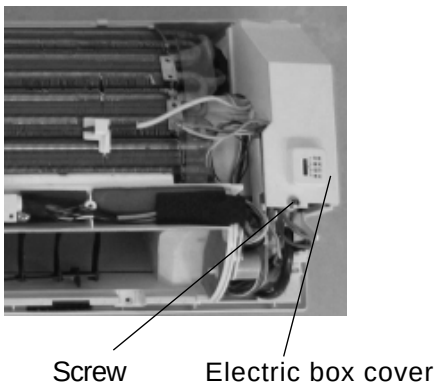

Fig. 7－5

7.1.6 Disasssemble the water-tray sub-assy

Loosen the left and right clasps of the water tray sub-assy, the pull out the terminals of the stepping motor. Then could take out the water-tray sub-assy. Please take care, because there is drainage pipe together. As shown in Fig. 7-6.

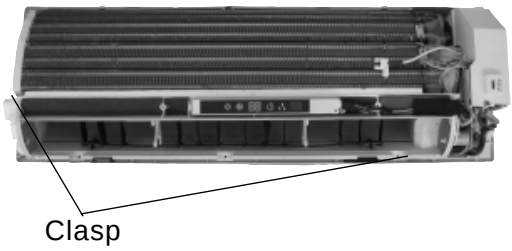

Fig.7－6

Operation procedures/pictures

7.1.7 Disassemble electric box

Remove the wire terminal of the motor, use the screwdriver to unscrew the earth screw and the screw fixing the electric box, then at last to open one clasp of the electric box by hands, can take down the electric box. As shown in Fig. 7-7.

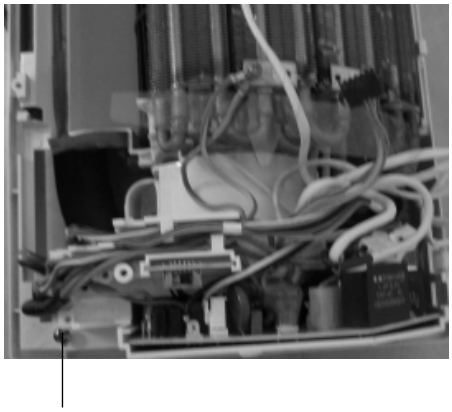

Fig 7 — 7

7.1.8 Disassemble evaporator

Unscrew one screw which fixing the connection pipe clamp. Then taking down the connection pipe clamp. As shown in Fig. 7-8.
Unscrew two screws of the left and right sides of evaporator. As shown in Fig. 7-9, 7-10.
Lift up the left side of evaporator by hands, then push it backward, to make the side clasp slide out of the groove. Be careful to take out the evaporator, and take care of the the connection pipe.

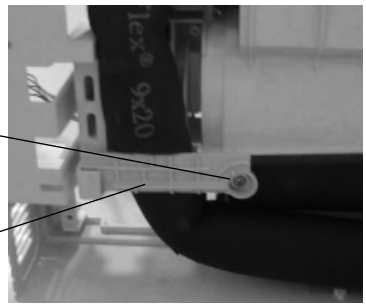

Fig 7 — 8

Fig 7 — 9

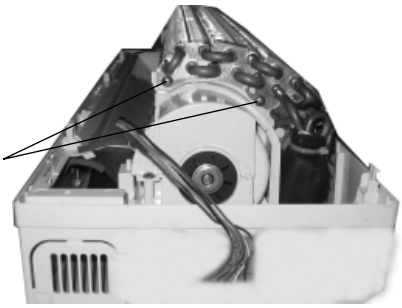

Fig 7 — 10

7. 1. 9 Disassemble motor

Disassemble the bolt of fixing the motor clamp, there are 3pcs in all.Take down the motor clamp. As shown in Fig. 7-11. Loosen tighten nut on the right side of spindle sleeve of the cross flow fan, slightly to lift the motor up, then could take down the motor. As shown in Fig. 7-12.

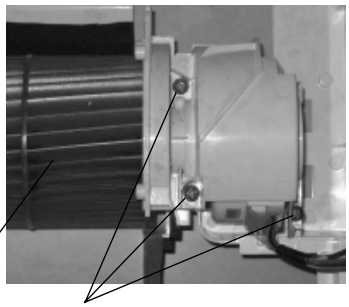

Fig. 7 — 11

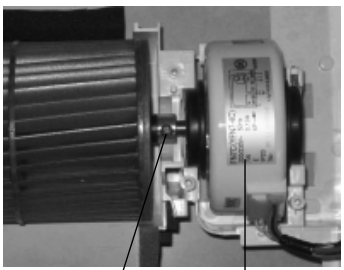

Fig.7 — 12

7. 1. 10 Disassemble cross flow fan

Refer to the steps of the above, after took out the motor,

then could take out the cross flow fan from the base.

7. 2 Disassembly Procedures of the outdoor unit

Operation procedures/pictures

7. 2. 1 Disassemble the top cover

Screw off one screw fixing the handle with a screw driverand remove the handle after pushing downward with force.
Screw off three screws around the top cover and pull upward to remove the top cover as shown in Fig.7-13

Fig.7-13

7. 2. 2 Remove the net cover

Screw off 4 taping screws at the rear side board.Remove the net cover as shown in Fig. 7-14.

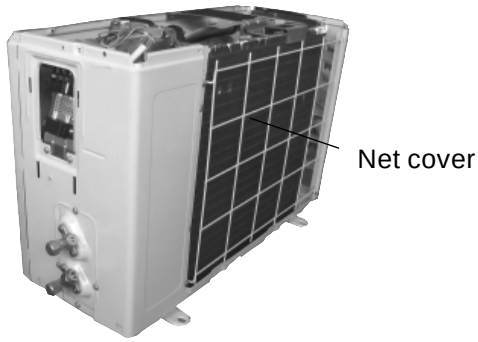

Fig 7-14

7. 2. 3 Disassemble rear grill

Screw off 6 screws by screwdriver at the rear grill. Remove the rear grill as shown in Fig.7-15.

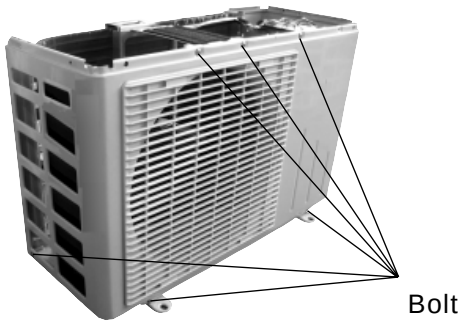

Fig 7-15

7.2.4 Disassemble electric box

Screw off the 3 screws fixing the electric box, and remove the electric box as shown in Fig. 7-16.

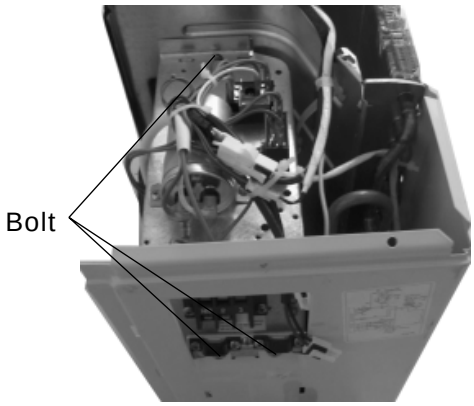

Fig. 7-16

7.2.5 Disassemble right side plate

Screw off the 5 screws at the rear side plate to remove the right side plate assembly as shown in Fig.7-17.

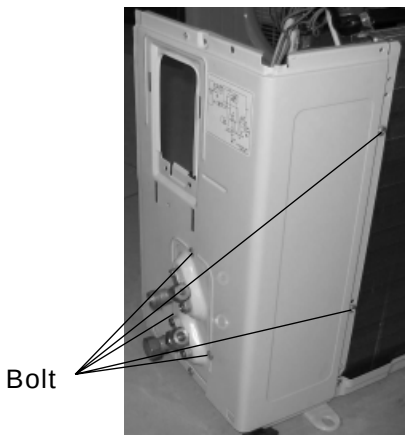

Fig. 7-17

7.2.6 Disassemble axial flow fan

Loosen the fixing nut with a spanner, remove the nut. Remove the axial flow fan with force as shown in Fig.7-18.

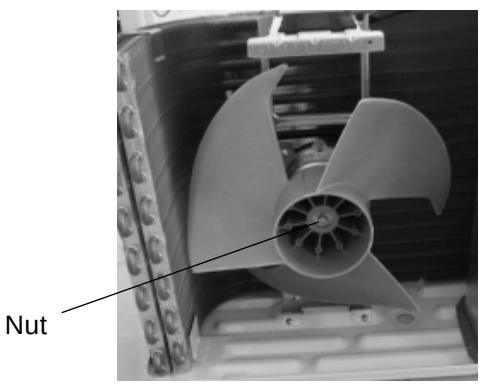

Fig. 7-18

Operation procedures/pictures

7.2.7 Disassemble motor and motor support

Screw off the screws fixing the motor and motor supporter and remove the motor and motor supporter. As shown in Fig.7-19.

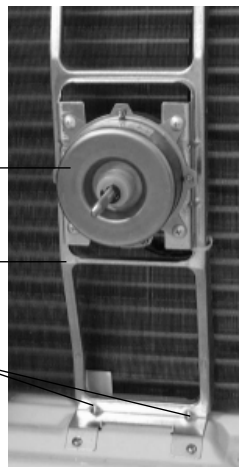

Fig.7-19

7.2.8 Disassemble the capillary sub-assy

Unsolder the soldered point which connected with the capillary sub-assy and other pipeline, then take down it. As shown in Fig. 7-20.

Fig 7-20

7.2.9 Disassemble valves

Use the screw driver to screw off the screws which fixing the valves, then unsolder the connection pipe which connected with the valves. Then could disassemble the valves. As shown in Fig. 7-21.

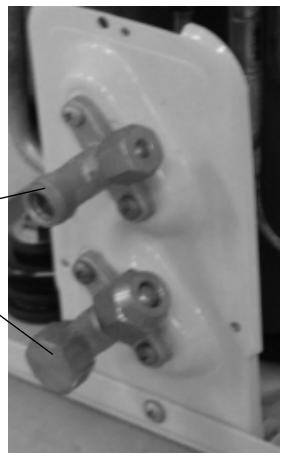

Fig 7-21

7. 2. 10 Disassemble the compressor

Unsolder two pieces of soldered point of the compressor, then loosen 3 pieces of bottom screw by spanner, then could disassemble the compressor. As shown in Fig. 7-22.

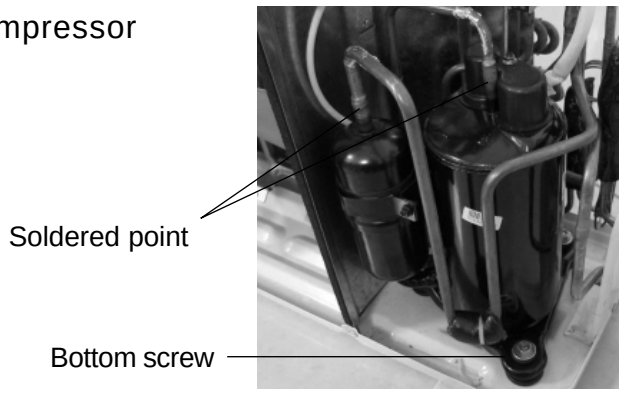

Fig. 7-22

7. 3 Disassembly Procedures of the outdoor unit

Operation procedures/pictures

7. 3. 1 Disassemble the top cover

Screw off one screw fixing the handle with a screw driverand remove the handle after pushing downward with force.

Screw off three screws around the top cover and pull upward to remove the top cover as shown in Fig.7-23

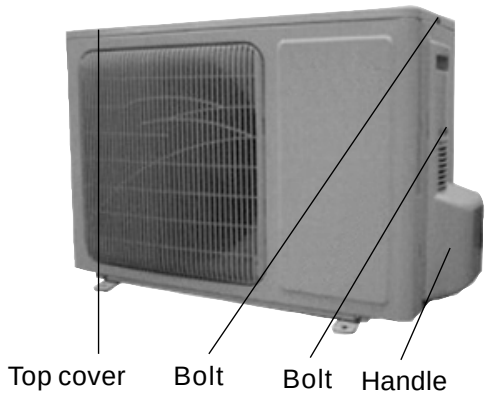

Fig. 7-23

7. 3. 2 Remove the net cover

Screw off 4 taping screws at the rear side board, and the valve frame bottom plate and condenser side board.Remove the net cover as shown in Fig.7-24

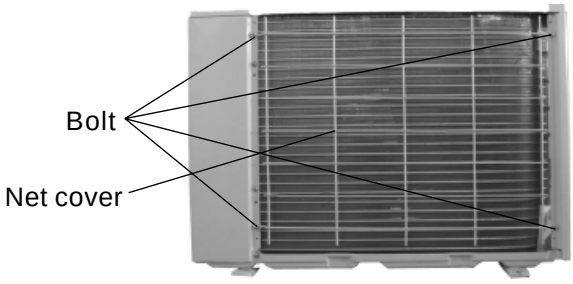

Fig 7-24

7. 3. 3 Disassemble panel assembly

Screw off 5 taping screws at the rear side board and the valve frame bottom plate and condenser side board. Remove the front panel assemble as shown in Fig.7-25.

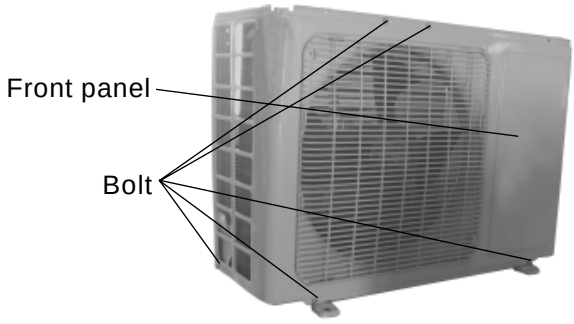

Fig 7-25

7.3.4 Disassemble electric device installation board

Screw off the 3 screws fixing the electric device installation board, and pull out the inserting contacts for leads of compressor and fan motor, and remove the electric device installation board as shown in Fig.7-26.

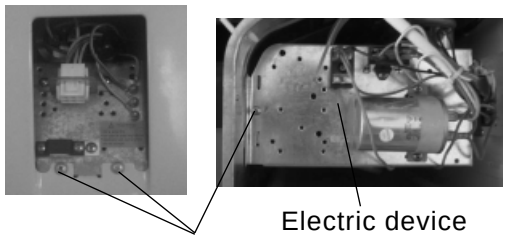

Fig. 7-26

7.3.5 Disassemble right side plate assembly

Screw off the 4 screws at the rear side plate to remove the right side plate assembly as shown in Fig.7-27.

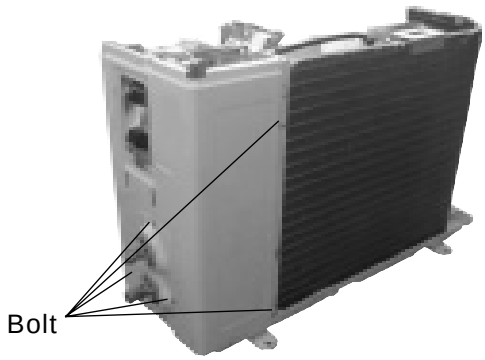

Fig.7-27

7.3.6 Disassemble axial flow fan

Loosen the fixing nut with a spanner, remove the nut, spring washer and flat washer. Remove the lower axial flow fan with force as shown in Fig.7-28.

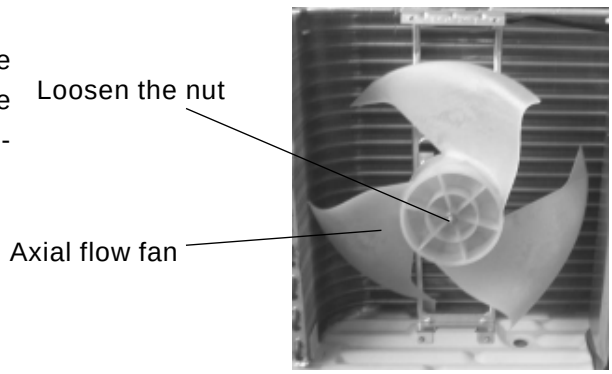

Fig. 7-28

Operation procedures/pictures

7.3.7 Disassemble motor and motor support

Screw off the 4 taping screws fixing the motor and remove the motor. Screw out the 2 taping screws and remove the motor support by pulling upward as shown in Fig.8-29.

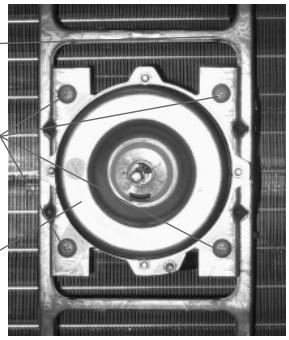

Fig.8-29

7.3.8 Disassemble 4-way valve (Only existing in cooling/heating unit)

Screw off the fixing nuts for the fixing the solenoids of 4-way valve and remove the solenoid. Wrap the 4-way valvewith wet gauze and solder off the 4 soldering points of 4-way valve, remove the 4-way valve. It is recommended to solder as quickly as possible and the cotton gauze should always be wet. Make sure not to burn the leads of compressor as shown in Fig.7-30. (Remarks: prior to disassembling any pipe component or compressor, it should be sure that no cooling refrigerant left inside any more.)

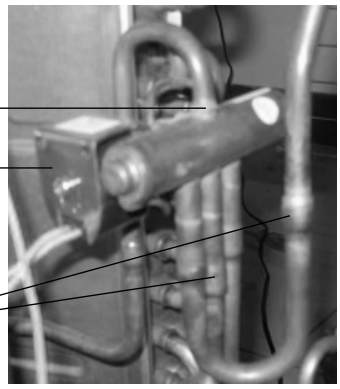

Fig.7-30

7.3.9 Disassemble the capillary sub-assy

Unsolder the soldered point of the capillary sub-assy and other pipelines, then take down the capillary sub-assy. As shown in Fig. 7-31.

Fig.7-31

7. 3. 10 Disassemble big and small valves

Screw off the 2 screw bolts fixing the big valve and solder off the soldering point connecting the big valve and the gas returning pipe. Remove the big valve (Remarks: It is recommended to wrap the big valve with wet gauze completely when soldering off the soldering points to prevent the valve body from being damaged by high temperature). Screw off the 2 screwed bolts fixing the small valve, and solder off the soldering point connecting the small valve and the cross type pipe. Remove the small valve as shown in Fig.7-32.

Fig 7-32

7. 3. 11 Disassemble the compressor

Screw off the 3 washer nuts at the bottom legs of the compressor (Remarks: requiring drainage of cooling refrigerant first.) Solder off all the soldering points of sucking/discharging pipes for the compressor, and remove carefully the piping. Remove the compressor as shown in Fig.7-33.

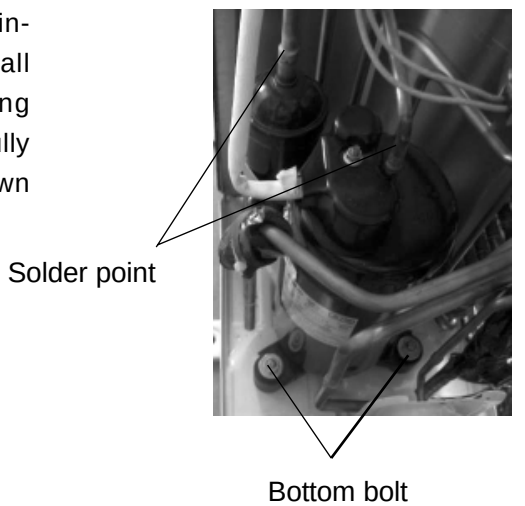

Fig. 7-33

8 Explosive view and list of parts for indoor unit

8. 1 Explosive view of parts for indoor unit

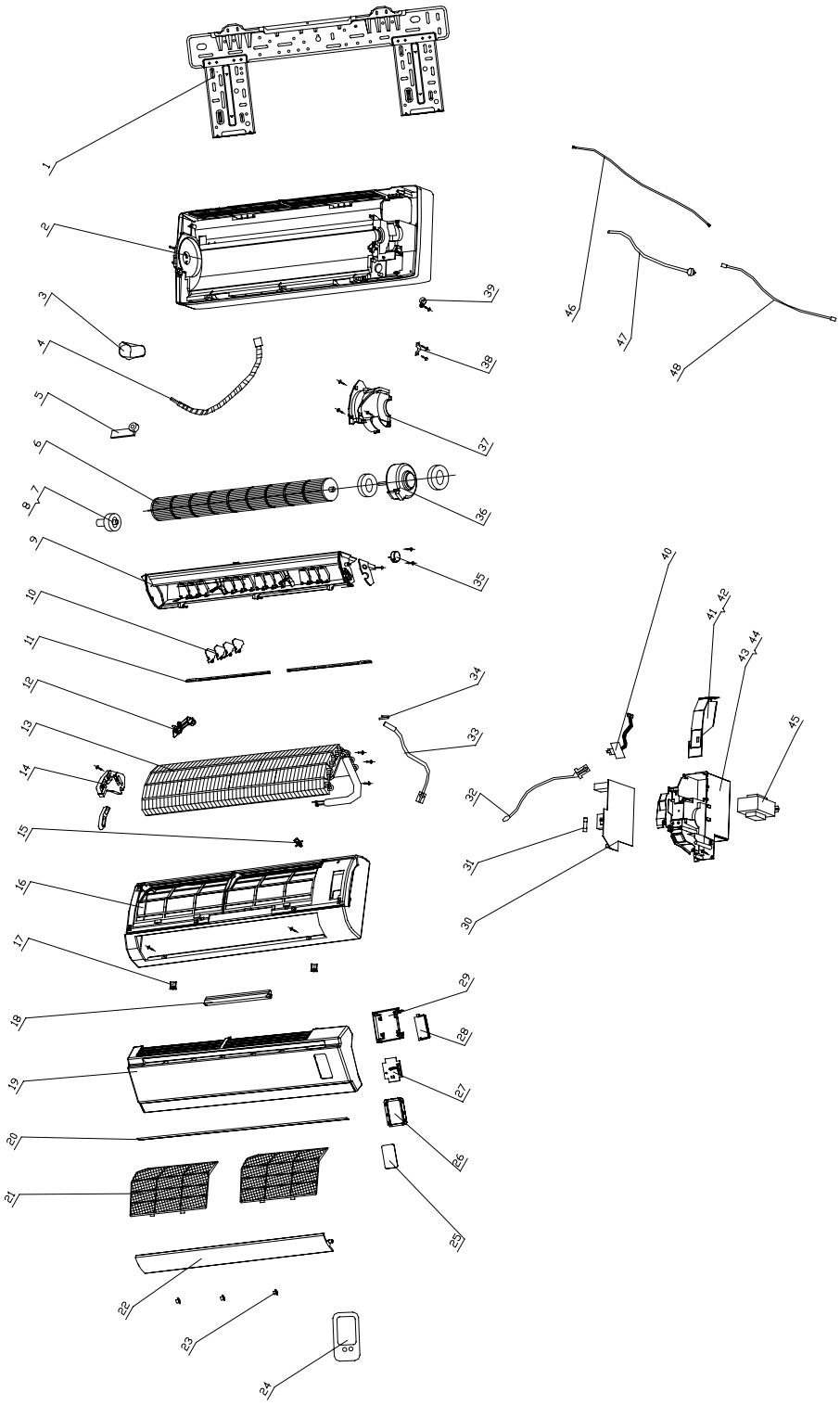

8.2 Parts list of indoor unit

No	Description	Part Code		Qty
		GWCN07B6NK1CA/I	GWHN07B6NK1CA/I	
1	Wall-Mounting Frame	01252220	01252220	1
2	Rear Case	222020572	222020572	1
3	Evaporator Pipe Cover	06122001	06122001	1
4	Drainage Pipe	052324111	052324111	1
5	Pipe Clamp	24242004	24242004	1
6	Cross Flow Fan	10352001	10352001	1
7	Fan Bearing	76512210	76512210	1
8	Ring of Bearing	76512203	76512203	1
9	Water Tray	20182052	20182052	1
10	Swing Louver	10512079	10512079	12
11	Swing link	10582052	10582052	1
12	Manual Lever	10582051	10582051	2
13	Evaporator Assy	010021271	010021271	1
14	Evaporator Support	24212058	24212058	1
15	Cable clamp	71010002	71010002	1
16	Front Case	200026261	200026261	1
17	Screw Cover	242520042	242520042	2
18	Decorating board	20192041	20192041	1
19	Front Panel	200025781	200025781	1
20	Border of front lid	20192042	20192042	1
21	Filter	11122002	11122002	2
22	Guide Louver	105120782	105120782	1
23	Guide Louver Bearing	10542011	10542011	3
24	Remote Controller	30511009	30511009	1
25	Magic mirror	68014004	68014004	1
26	Decorating ring	20192028	20192028	1
27	Display board	30545017	30545017	1
28	Protect board	26112102	26112102	1
29	Cover plate	22242056	22242056	1
30	Main PCB	30030266	30030265	1
31	Fuse 3.15A 250VAC	46010014	46010014	1
32	Room Sensor	390000451	390000451	1
33	Tube Sensor	390000592	390000592	1
34	Sensor insert	42020063	42020063	1
35	Stepping Motor MP28EA	15212105	15212105	1
36	Motor FN20E-PG	150120761	150120761	1
37	Motor Clamp	26112080	26112080	1
38	Wire Clip	26112082	26112082	1
39	Wire Clamp	/	71010103	1
40	Receiver Board K	30042017	30042017	1
42	Cover of shielding case	01592009	01592009	1
43	Electric Box	20112017	20112017	1
44	Shielding case	01592008	01592008	1
45	Transformer 41X26.5E	43110231	43110231	1
46	Connecting Cable	400202455	400202455	1
47	Power Cord	400220111	400220111	1
48	Signal control wire	/	4003213450	1

No	Description	Part Code		Qty
		GWCN09B6NK1CA/I	GWHN09B6NK1CA/I	
1	Wall-Mounting Frame	01252220	01252220	1
2	Rear Case	222020572	222020572	1
3	Evaporator Pipe Cover	06122001	06122001	1
4	Drainage Pipe	052324111	052324111	1
5	Pipe Clamp	24242004	24242004	1
6	Cross Flow Fan	10352001	10352001	1
7	Fan Bearing	76512210	76512210	1
8	Ring of Bearing	76512203	76512203	1
9	Water Tray	20182052	20182052	1
10	Swing Louver	10512079	10512079	12
11	Swing link	10582052	10582052	1
12	Manual Lever	10582051	10582051	2
13	Evaporator Assy	010021271	010021271	1
14	Evaporator Support	24212058	24212058	1
15	Cable clamp	71010002	71010002	1
16	Front Case	200026261	200026261	1
17	Screw Cover	242520042	242520042	2
18	Decorating board	20192041	20192041	1
19	Front Panel	200025781	200025781	1
20	Border of front lid	20192042	20192042	1
21	Filter	11122002	11122002	2
22	Guide Louver	105120782	105120782	1
23	Guide Louver Bearing	10542011	10542011	3
24	Remote Controller	30511009	30511009	1
25	Magic mirror	68014004	68014004	1
26	Decorating ring	20192028	20192028	1
27	Display board	30545017	30545017	1
28	Protect board	26112102	26112102	1
29	Cover plate	22242056	22242056	1
30	Main PCB	30030269	30030268	1
31	Fuse 3.15A 250VAC	46010014	46010014	1
32	Room Sensor	390000451	390000451	1
33	Tube Sensor	390000592	390000592	1
34	Sensor insert	42020063	42020063	1
35	Stepping Motor MP28EA	15212105	15212105	1
36	Motor FN20E-PG	150120761	150120761	1
37	Motor Clamp	26112080	26112080	1
38	Wire Clip	26112082	26112082	1
39	Wire Clamp	/	71010103	1
40	Receiver Board K	30042017	30042017	1
42	Cover of shielding case	01592009	01592009	1
43	Electric Box	20112017	20112017	1
44	Shielding case	01592008	01592008	1
45	Transformer 41X26.5E	43110231	43110231	1
46	Connecting Cable	400202455	400202455	1
47	Power Cord	400220111	400220111	1
48	Signal control wire	/	4003213450	1

No	Description	Part Code		Qty
		GWCN12B6NK1CA/I	GWHN12B6NK1CA/I	
1	Wall-Mounting Frame	01252220	01252220	1
2	Rear Case	222020572	222020572	1
3	Evaporator Pipe Cover	06122001	06122001	1
4	Drainage Pipe	052324111	052324111	1
5	Pipe Clamp	24242004	24242004	1
6	Cross Flow Fan	10352001	10352001	1
7	Fan Bearing	76512210	76512210	1
8	Ring of Bearing	76512203	76512203	1
9	Water Tray	20182052	20182052	1
10	Swing Louver	10512079	10512079	12
11	Swing link	10582052	10582052	1
12	Manual Lever	10582051	10582051	2
13	Evaporator Assy	010021274	010021274	1
14	Evaporator Support	24212058	24212058	1
15	Cable clamp	71010002	71010002	1
16	Front Case	200026261	200026261	1
17	Screw Cover	242520042	242520042	2
18	Decorating board	20192041	20192041	1
19	Front Panel	200025781	200025781	1
20	Border of front lid	20192042	20192042	1
21	Filter	11122002	11122002	2
22	Guide Louver	105120782	105120782	1
23	Guide Louver Bearing	10542011	10542011	3
24	Remote Controller	30511009	30511009	1
25	Magic mirror	68014004	68014004	1
26	Decorating ring	20192028	20192028	1
27	Display board	30545017	30545017	1
28	Protect board	26112102	26112102	1
29	Cover plate	22242056	22242056	1
30	Main PCB	30030263	30030262	1
31	Fuse 3.15A 250VAC	46010014	46010014	1
32	Room Sensor	390000451	390000451	1
33	Tube Sensor	390000592	390000592	1
34	Sensor insert	42020063	42020063	1
35	Stepping Motor MP28EA	15212105	15212105	1
36	Motor FN20E-PG	150120761	150120761	1
37	Motor Clamp	26112080	26112080	1
38	Wire Clip	26112082	26112082	1
39	Wire Clamp	/	71010103	1
40	Receiver Board K	30042017	30042017	1
42	Cover of shielding case	01592009	01592009	1
43	Electric Box	20112017	20112017	1
44	Shielding case	01592008	01592008	1
45	Transformer 41X26.5E	43110231	43110231	1
46	Connecting Cable	400202455	400202455	1
47	Power Cord	400220111	400220111	1
48	Signal control wire	/	4003213450	1

No	Description	Part Code		Qty
		GWCN07B6NK3CA/I	GWHN07B6NK3CA/I	
1	Wall-Mounting Frame	01252220	01252220	1
2	Rear Case	222020572	222020572	1
3	Evaporator Pipe Cover	06122001	06122001	1
4	Drainage Pipe	052324111	052324111	1
5	Pipe Clamp	24242004	24242004	1
6	Cross Flow Fan	10352001	10352001	1
7	Fan Bearing	76512210	76512210	1
8	Ring of Bearing	76512203	76512203	1
9	Water Tray	20182052	20182052	1
10	Swing Louver	10512079	10512079	12
11	Swing link	10582052	10582052	1
12	Manual Lever	10582051	10582051	2
13	Evaporator Assy	010021276	010021276	1
14	Evaporator Support	24212058	24212058	1
15	Cable clamp	71010002	71010002	1
16	Front Case	200026261	200026261	1
17	Screw Cover	242520042	242520042	2
18	Decorating board	20192041	20192041	1
19	Front Panel	200025781	200025781	1
20	Border of front lid	20192042	20192042	1
21	Filter	11122002	11122002	2
22	Guide Louver	105120782	105120782	1
23	Guide Louver Bearing	10542011	10542011	3
24	Remote Controller	30511009	30511009	1
25	Magic mirror	68014004	68014004	1
26	Decorating ring	20192028	20192028	1
27	Display board	30545017	30545017	1
28	Protect board	26112102	26112102	1
29	Cover plate	22242056	22242056	1
30	Main PCB	30030266	30030265	1
31	Fuse 3.15A 250VAC	46010014	46010014	1
32	Room Sensor	390000451	390000451	1
33	Tube Sensor	390000592	390000592	1
34	Sensor insert	42020063	42020063	1
35	Stepping Motor MP28EA	15212105	15212105	1
36	Motor FN20E-PG	150120761	150120761	1
37	Motor Clamp	26112080	26112080	1
38	Wire Clip	26112082	26112082	1
39	Wire Clamp	/	71010103	1
40	Receiver Board K	30042017	30042017	1
42	Cover of shielding case	01592009	01592009	1
43	Electric Box	20112017	20112017	1
44	Shielding case	01592008	01592008	1
45	Transformer 41X26.5E	43110231	43110231	1
46	Connecting Cable	400202455	400202455	1
47	Power Cord	400220111	400220111	1
48	Signal control wire	/	4003213450	1

No	Description	Part Code		Qty
		GWCN09B6NK3CA/I	GWHN09B6NK3CA/I	
1	Wall-Mounting Frame	01252220	01252220	1
2	Rear Case	222020572	222020572	1
3	Evaporator Pipe Cover	06122001	06122001	1
4	Drainage Pipe	052324111	052324111	1
5	Pipe Clamp	24242004	24242004	1
6	Cross Flow Fan	10352001	10352001	1
7	Fan Bearing	76512210	76512210	1
8	Ring of Bearing	76512203	76512203	1
9	Water Tray	20182052	20182052	1
10	Swing Louver	10512079	10512079	12
11	Swing link	10582052	10582052	1
12	Manual Lever	10582051	10582051	2
13	Evaporator Assy	010021276	010021276	1
14	Evaporator Support	24212058	24212058	1
15	Cable clamp	71010002	71010002	1
16	Front Case	200026261	200026261	1
17	Screw Cover	242520042	242520042	2
18	Decorating board	20192041	20192041	1
19	Front Panel	200025781	200025781	1
20	Border of front lid	20192042	20192042	1
21	Filter	11122002	11122002	2
22	Guide Louver	105120782	105120782	1
23	Guide Louver Bearing	10542011	10542011	3
24	Remote Controller	30511009	30511009	1
25	Magic mirror	68014004	68014004	1
26	Decorating ring	20192028	20192028	1
27	Display board	30545017	30545017	1
28	Protect board	26112102	26112102	1
29	Cover plate	22242056	22242056	1
30	Main PCB	30030263	30030262	1
31	Fuse 3.15A 250VAC	46010014	46010014	1
32	Room Sensor	390000451	390000451	1
33	Tube Sensor	390000592	390000592	1
34	Sensor insert	42020063	42020063	1
35	Stepping Motor MP28EA	15212105	15212105	1
36	Motor FN20E-PG	150120761	150120761	1
37	Motor Clamp	26112080	26112080	1
38	Wire Clip	26112082	26112082	1
39	Wire Clamp	/	71010103	1
40	Receiver Board K	30042017	30042017	1
42	Cover of shielding case	01592009	01592009	1
43	Electric Box	20112017	20112017	1
44	Shielding case	01592008	01592008	1
45	Transformer 41X26.5E	43110231	43110231	1
46	Connecting Cable	400202455	400202455	1
47	Power Cord	400220111	400220111	1
48	Signal control wire	/	4003213450	1

No	Description	Part Code		Qty
		GWCN12B6NK3CA/I	GWHN12B6NK3CA/I	
1	Wall-Mounting Frame	01252220	01252220	1
2	Rear Case	222020572	222020572	1
3	Evaporator Pipe Cover	06122001	06122001	1
4	Drainage Pipe	052324111	052324111	1
5	Pipe Clamp	24242004	24242004	1
6	Cross Flow Fan	10352001	10352001	1
7	Fan Bearing	76512210	76512210	1
8	Ring of Bearing	76512203	76512203	1
9	Water Tray	20182052	20182052	1
10	Swing Louver	10512079	10512079	12
11	Swing link	10582052	10582052	1
12	Manual Lever	10582051	10582051	2
13	Evaporator Assy	010021279	010021279	1
14	Evaporator Support	24212058	24212058	1
15	Cable clamp	71010002	71010002	1
16	Front Case	200026261	200026261	1
17	Screw Cover	242520042	242520042	2
18	Decorating board	20192041	20192041	1
19	Front Panel	200025781	200025781	1
20	Border of front lid	20192042	20192042	1
21	Filter	11122002	11122002	2
22	Guide Louver	105120782	105120782	1
23	Guide Louver Bearing	10542011	10542011	3
24	Remote Controller	30511009	30511009	1
25	Magic mirror	68014004	68014004	1
26	Decorating ring	20192028	20192028	1
27	Display board	30545017	30545017	1
28	Protect board	26112102	26112102	1
29	Cover plate	22242056	22242056	1
30	Main PCB	30030263	30030262	1
31	Fuse 3.15A 250VAC	46010014	46010014	1
32	Room Sensor	390000451	390000451	1
33	Tube Sensor	390000592	390000592	1
34	Sensor insert	42020063	42020063	1
35	Stepping Motor MP28EA	15212105	15212105	1
36	Motor FN20E-PG	150120761	150120761	1
37	Motor Clamp	26112080	26112080	1
38	Wire Clip	26112082	26112082	1
39	Wire Clamp	/	71010103	1
40	Receiver Board K	30042017	30042017	1
42	Cover of shielding case	01592009	01592009	1
43	Electric Box	20112017	20112017	1
44	Shielding case	01592008	01592008	1
45	Transformer 41X26.5E	43110231	43110231	1
46	Connecting Cable	400202455	400202455	1
47	Power Cord	400220111	400220111	1
48	Signal control wire	/	4003213450	1

8. 3 Explosive view of parts for indoor unit

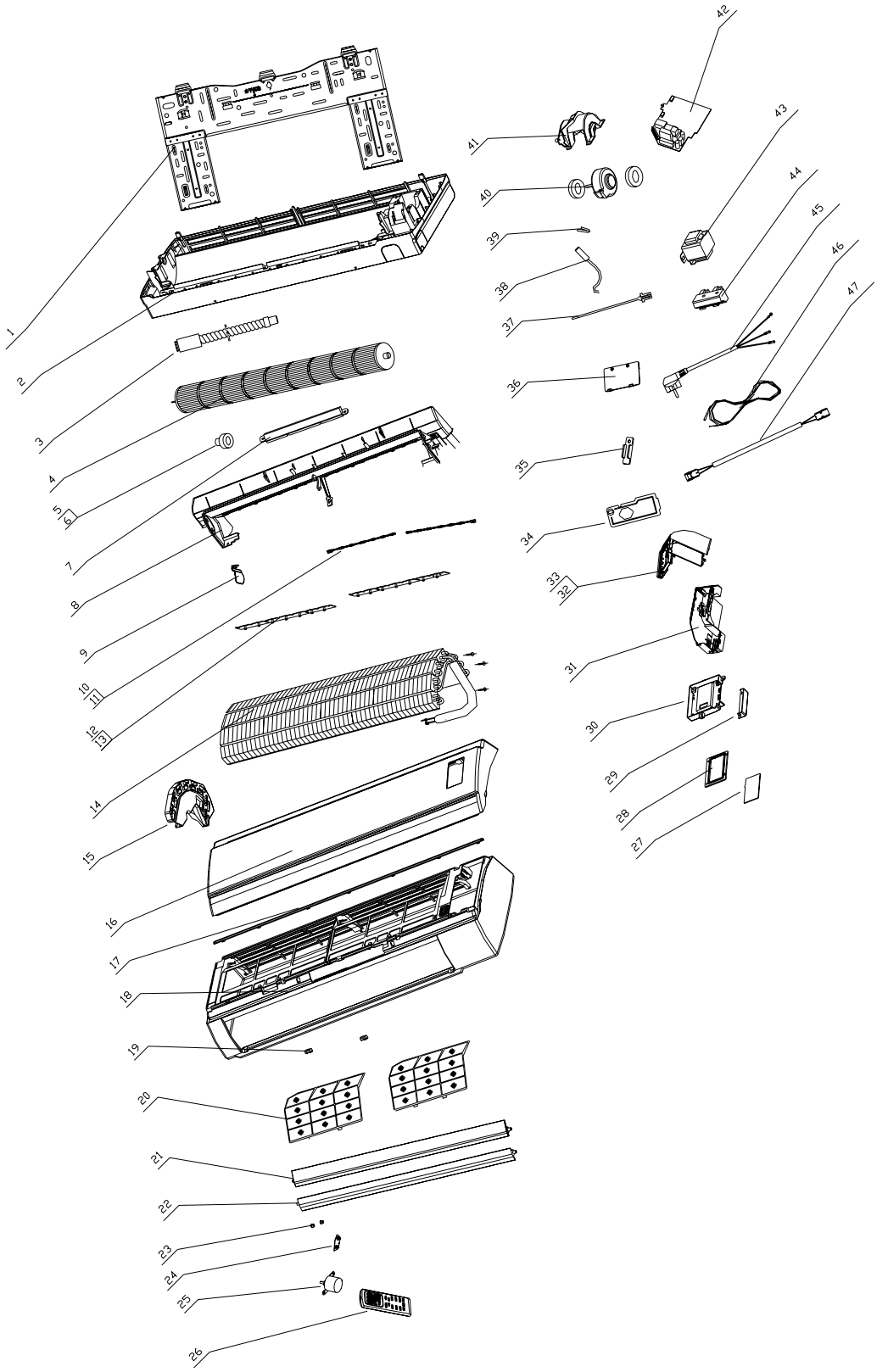

8.4 Parts list of indoor unit

No	Description	Part Code		Qty
		GWCN12B7NK1CA/I	GWHN12B7NK1CA/I	
1	Wall-Mounting Frame	01252217	01252217	1
2	Rear Case	222020343	222020343	1
3	Drainage Pipe	052324111	052324111	1
4	Cross Flow Fan	10352012	10352012	1
5	Fan Bearing	76512210	76512210	1
6	Ring of Bearing	76512206	76512206	1
7	Decoration Plate	20192023	20192023	1
8	Water Tray	20182426	20182426	1
9	Swing Louver	10512030	10512030	14
10	Left Linkage Lever	10582016	10582016	1
11	Right Linkage Lever	10582017	10582017	1
12	Left Louver Support	26112037	26112037	1
13	Right Louver Support	26112038	26112038	1
14	Evaporator Assy	010021573	010021573	1
15	Left Evaporator Support	24212023	24212023	1
16	Front Panel	20002580	20002580	1
17	Border of front lid	20192044	20192044	1
18	Front Case	200025041	200025041	1
19	Screw Cover	242520053	242520053	2
20	Filter Assy	11120019	11120019	2
21	Guide Louver	261120393	261120393	1
22	Lower Guide Louver	261120403	261120403	1
23	Mid Bearing	10542016	10542016	2
24	Left Bearing	10542002	10542002	1
25	Motor MP24AA	15212108	15212108	1
26	Remote Controller YB1A21	30511009	30511009	1
27	Magic mirror	68012046	68012046	1
28	Decoration Frame	20192031	20192031	1
29	Display Cover	22244060	22244060	1
30	Display	30545012	30545012	1
31	Electric Box	20102140	20102140	1
32	Electric Box Cover	201021411	201021411	1
33	Shielding Box Sub-assy	01592013	01592013	1
34	Covering Plate	22242053	22242053	1
35	Wire Clamp	24242003	24242003	1
36	Rear Pipe Cover	26112035	26112035	1
37	Room Sensor	390000451	390000451	1
38	Tube Sensor	390000591	390000591	1
39	Sensor Insert	42020063	42020063	1
40	Motor FN9D-PG	15012072	15012072	1
41	Right Support of Evaporator	24212024	24212024	1
42	Main PCB	30030315	30030314	1
43	Transformer	43110236	43110236	1
44	Terminal board (4bit)	42010248	42010248	1
45	Power Cord	40020203	40020203	1
46	Connecting Cable	400205401	400205401	1
47	Signal Cable	无	4003213450	

No	Description	Part Code		Qty
		GWCN12B7NK3CA/I	GWHN12B7NK3CA/I	
1	Wall-Mounting Frame	01252217	01252217	1
2	Rear Case	222020343	222020343	1
3	Drainage Pipe	052324111	052324111	1
4	Cross Flow Fan	10352012	10352012	1
5	Fan Bearing	76512210	76512210	1
6	Ring of Bearing	76512206	76512206	1
7	Decoration Plate	20192023	20192023	1
8	Water Tray	20182426	20182426	1
9	Swing Louver	10512030	10512030	14
10	Left Linkage Lever	10582016	10582016	1
11	Right Linkage Lever	10582017	10582017	1
12	Left Louver Support	26112037	26112037	1
13	Right Louver Support	26112038	26112038	1
14	Evaporator Assy	010022152	010022152	1
15	Left Evaporator Support	24212023	24212023	1
16	Front Panel	20002580	20002580	1
17	Border of front lid	20192044	20192044	1
18	Front Case	200025041	200025041	1
19	Screw Cover	242520053	242520053	2
20	Filter Assy	11120019	11120019	2
21	Guide Louver	261120393	261120393	1
22	Lower Guide Louver	261120403	261120403	1
23	Mid Bearing	10542016	10542016	2
24	Left Bearing	10542002	10542002	1
25	Motor MP24AA	15212108	15212108	1
26	Remote Controller YB1A21	30511009	30511009	1
27	Magic mirror	68012046	68012046	1
28	Decoration Frame	20192031	20192031	1
29	Display Cover	22244060	22244060	1
30	Display	30545012	30545012	1
31	Electric Box	20102140	20102140	1
32	Electric Box Cover	201021411	201021411	1
33	Shielding Box Sub-assy	01592013	01592013	1
34	Covering Plate	22242053	22242053	1
35	Wire Clamp	24242003	24242003	1
36	Rear Pipe Cover	26112035	26112035	1
37	Room Sensor	390000451	390000451	1
38	Tube Sensor	390000591	390000591	1
39	Sensor Insert	42020063	42020063	1
40	Motor FN9D-PG	15012072	15012072	1
41	Right Support of Evaporator	24212024	24212024	1
42	Main PCB	30030315	30030314	1
43	Transformer	43110236	43110236	1
44	Terminal board (4bit)	42010248	42010248	1
45	Power Cord	40020203	40020203	1
46	Connecting Cable	400205401	400205401	1
47	Signal Cable	无	4003213450	1

8.5 Explosive view of outdoor unit

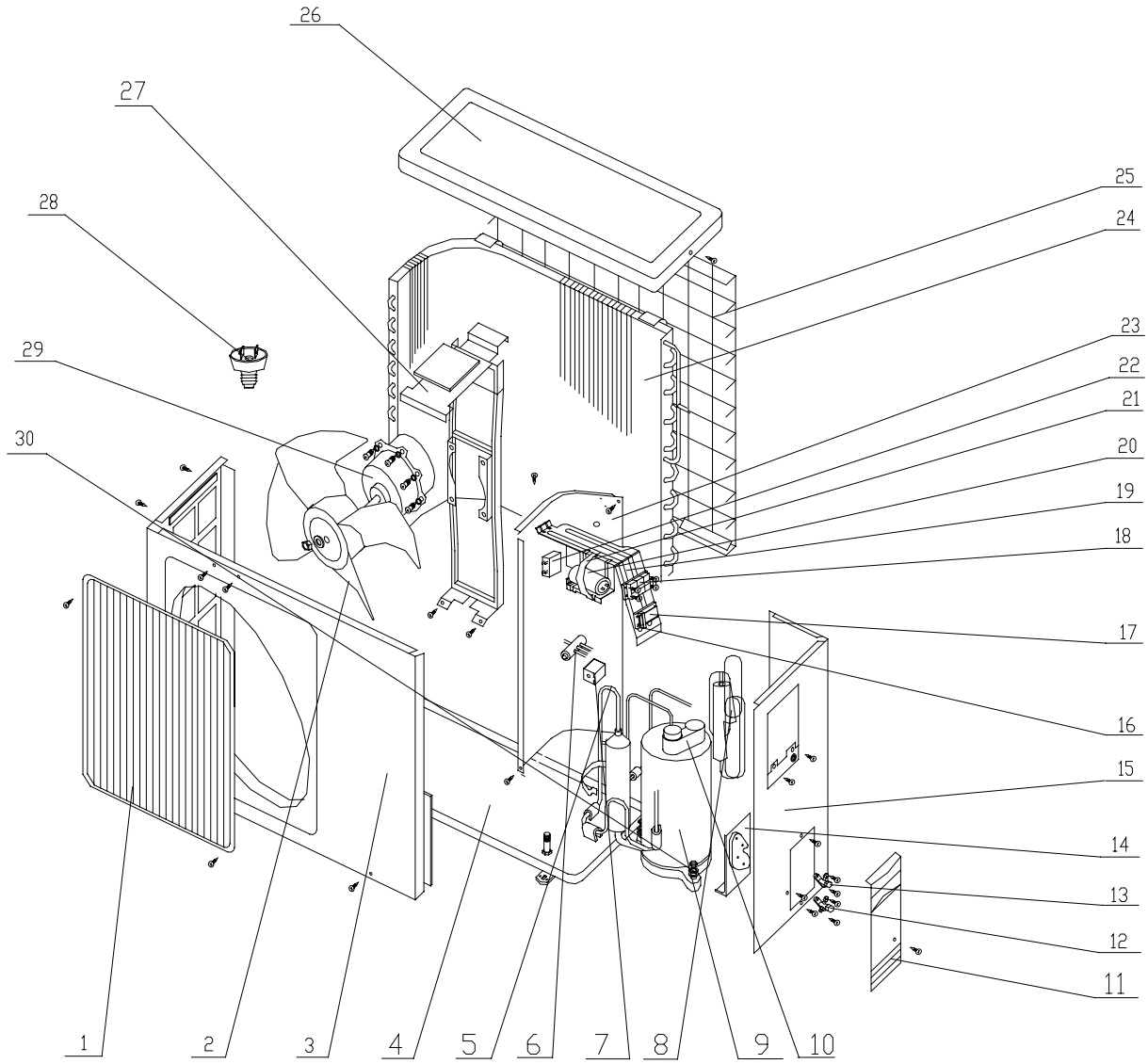

8.6 Parts list of outdoor unit

No	Description	Part Code		Qty
		GWCN07B6NE1EA/O	GWHN07B6NE1EA/O	
1	Front Grill	22263002	22263002	1
2	Axial Flow Fan	10333002	10333002	1
3	Front Plate	015330141	015330141	1
4	Metal Base	01203153	01203153	1
5	4-way rever -sing valve component	/	03023328	1
6	4-way valve	/	43000402	1
7	4-way valve coil	/	43000400	1
8	Capillary Assy	03003318	03003321	1
9	Compressor 2P17S225ANA	00100054	00100054	1
10	Overload Protector	00180001	00180001	1
11	Handle	26233101	26233101	1
12	Gas Valve	07100145	07100145	1
13	Liquid Valve	07100024	07100024	1
14	Valve Support	01713424	01713424	1
15	Right Side Plate	01303151	01303151	1
16	Wiring clamp plate	24253001	24253001	1
17	Wiring clamp cover	24253002	24253002	1
18	Terminal Board T386A	42011241	42011241	1
19	Electric Plate	01403012	01403012	1
20	Comp Capacitor	33010044	33010044	1
21	Capacitor Clamp	02143014	02143014	1
22	Fan Capacitor	33010020	33010020	1
23	Isolation Sheet Assy	01233101	01233103	1
24	Condenser Assy	01133037	01133048	1
25	Rear Grill	11123201	11123201	1
26	Top Cover	01253263	01253027	1
27	Motor Support	01703054	01703054	1
28	Drainage Connecter	/	06123401	1
29	Motor FW20F	15013156	15013156	1
30	Compressor Gasket	76710271	76710271	3

The above data are subject to change without notice.

No	Description	Part Code		Qty
		GWCN09B6NE1EA/O	GWHN09B6NE1EA/O	
1	Front Grill	22263002	22263002	1
2	Axial Flow Fan	10333002	10333002	1
3	Front Plate	015330141	015330141	1
4	Metal Base	01203070	01203481	1
5	4-way rever -sing valve component	/	03023400	1
6	4-way valve	/	43000402	1
7	4-way valve coil	/	43000400	1
8	Capillary Assy	03003324	03003320	1
9	Compressor 2P17S225ANA	00120110	00120078	1
10	Overload Protector	00180061	00180061	1
11	Handle	26233101	26233101	1
12	Gas Valve	07100143	07100145	1
13	Liquid Valve	07100024	07100024	1
14	Valve Support	01713424	01713424	1
15	Right Side Plate	01303151	01303151	1
16	Wiring clamp plate	24253001	24253001	1
17	Wiring clamp cover	24253002	24253002	1
18	Terminal Board T386A	42011241	42011241	1
19	Electric Plate	01403012	01403012	1
20	Comp Capacitor	33010742	33000017	1
21	Capacitor Clamp	02143014	02143014	1
22	Fan Capacitor	33010020	33010020	1
23	Isolation Sheet Assy	01233101	01233101	1
24	Condenser Assy	01133037	01133048	1
25	Rear Grill	11123201	11123201	1
26	Top Cover	01253263	01253027	1
27	Motor Support	01703054	01703054	1
28	Drainage Connecter	/	06123401	1
29	Motor FW20F	15013156	15013156	1
30	Compressor Gasket	76710217	76710217	3

The above data are subject to change without notice.

No	Description	Part Code		Qty
		GWCN07B8NK3BA/O	GWHN07B8NK3BA/O	
1	Front Grill	22263002	22263002	1
2	Axial Flow Fan	10333002	10333002	1
3	Front Plate	015330141	015330141	1
4	Metal Base	01203171	01203171	1
5	4-way rever -sing valve component	/	03023460	1
6	4-way valve	/	430004022	1
7	4-way valve coil	/	43000400	1
8	Capillary Assy	03103230	03003358	1
9	Compressor 2P17S225ANA	00100086	00100086	1
10	Overload Protector	00180044	00180044	1
11	Handle	26233101	26233101	1
12	Gas Valve	07100005	07100005	1
13	Liquid Valve	07100003	07100003	1
14	Valve Support	01713424	01713424	1
15	Right Side Plate	01303151	01303151	1
16	Wiring clamp plate	24253001	24253001	1
17	Wiring clamp cover	24253002	24253002	1
18	Terminal Board T386A	42011241	42011241	1
19	Electric Plate	01403012	01403012	1
20	Comp Capacitor	33000017	33000017	1
21	Capacitor Clamp	02143014	02143014	1
22	Fan Capacitor	33010020	33010020	1
23	Isolation Sheet Assy	01233101	01233101	1
24	Condenser Assy	01133006	011032864	1
25	Rear Grill	11123301	11123301	1
26	Top Cover	01253263	01253027	1
27	Motor Support	01703055	01703055	1
28	Drainage Connecter	/	06123401	1
29	Motor FW20F	15013156	15013156	1
30	Compressor Gasket	76710253	76710253	3

8. 7 Explosive view of outdoor unit

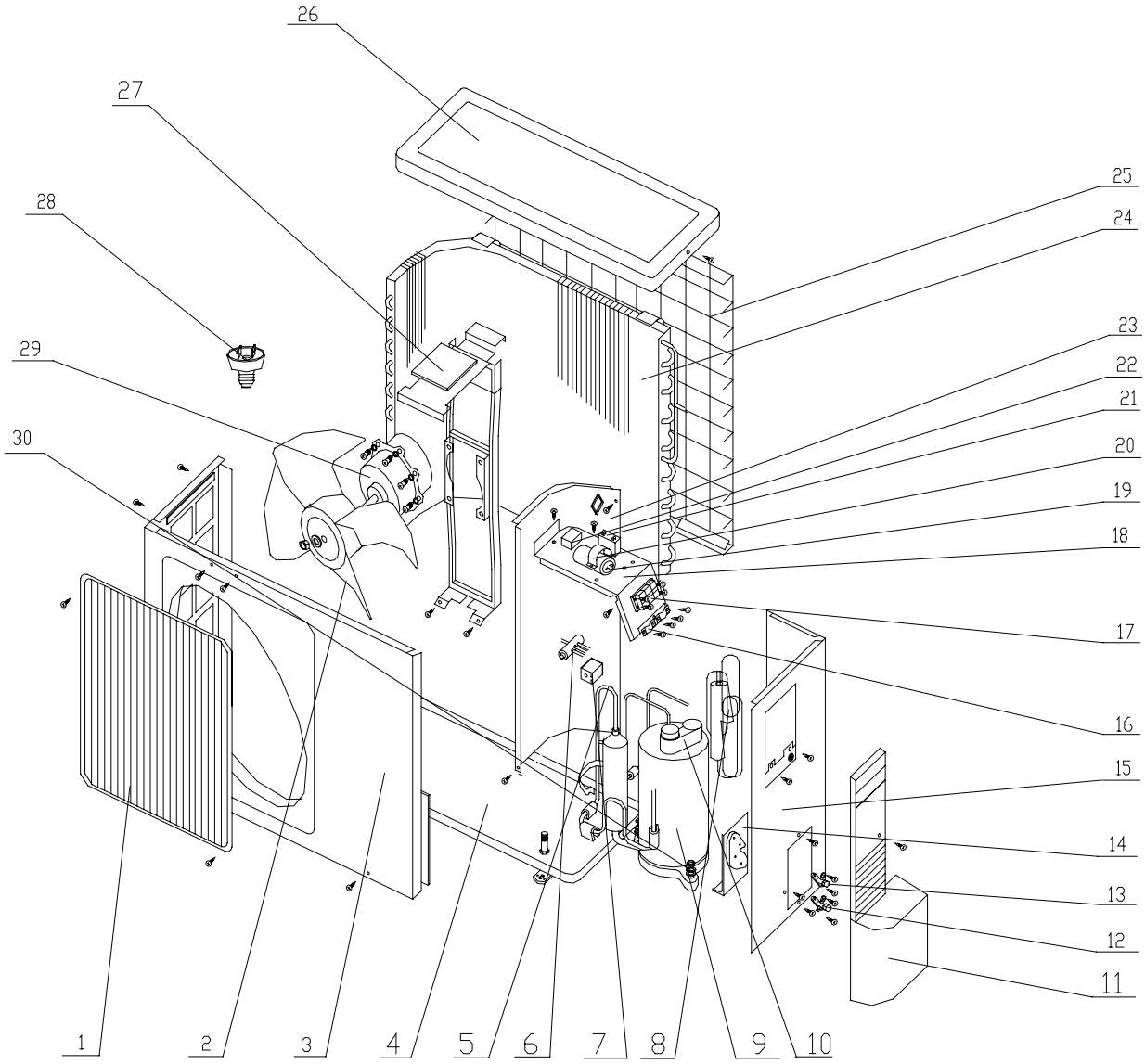

8.8 Parts list of outdoor unit

No	Description	Part Code		Qty
		GWHN12B6NE1EA/O	GWCN12B6NE1EA/O	
1	Front Grill	22413431	22413431	1
2	Axial Flow Fan	10333413	10333413	1
3	Front Plate	015330121	01533012	1
4	Metal Base	012032453	012032453	1
5	4-way rever -sing valve component	030231453	/	1
6	4-way valve	43000402	/	1
7	4-way valve coil	43000400	/	1
8	Capillary Assy	030036883	030034262	1
9	Compressor 2P17S225ANA	00100423	00103020	1
10	Overload Protector	00180046	/	1
11	Handle	26233433	26233433	1
12	Gas Valve	07100147	07100147	1
13	Liquid Valve	07100024	07100024	1
14	Valve Support	01713041	01713041	1
15	Right Side Plate	01302004	01302004	1
16	Wiring clamp plate	71010103	71010103	1
17	Wiring clamp cover	42011241	42011241	1
18	Terminal Board T386A	01403117	01403117	1
19	Electric Plate	33010743	33010743	1
20	Comp Capacitor	02143401	02143401	1
21	Capacitor Clamp	33010027	33010027	1
22	Fan Capacitor	/	/	1
23	Isolation Sheet Assy	01233417	01233417	1
24	Condenser Assy	01103173	01133375	1
25	Rear Grill	01473030	01473030	1
26	Top Cover	01253261	01253261	1
27	Motor Support	01703068	01703052	1
28	Drainage Connecter	06123401	/	1
29	Motor FW20F	15013067	15013067	1
30	Compressor Gasket	76710270	76710270	3

The above data are subject to change without notice.

8.9 Explosive view of outdoor unit

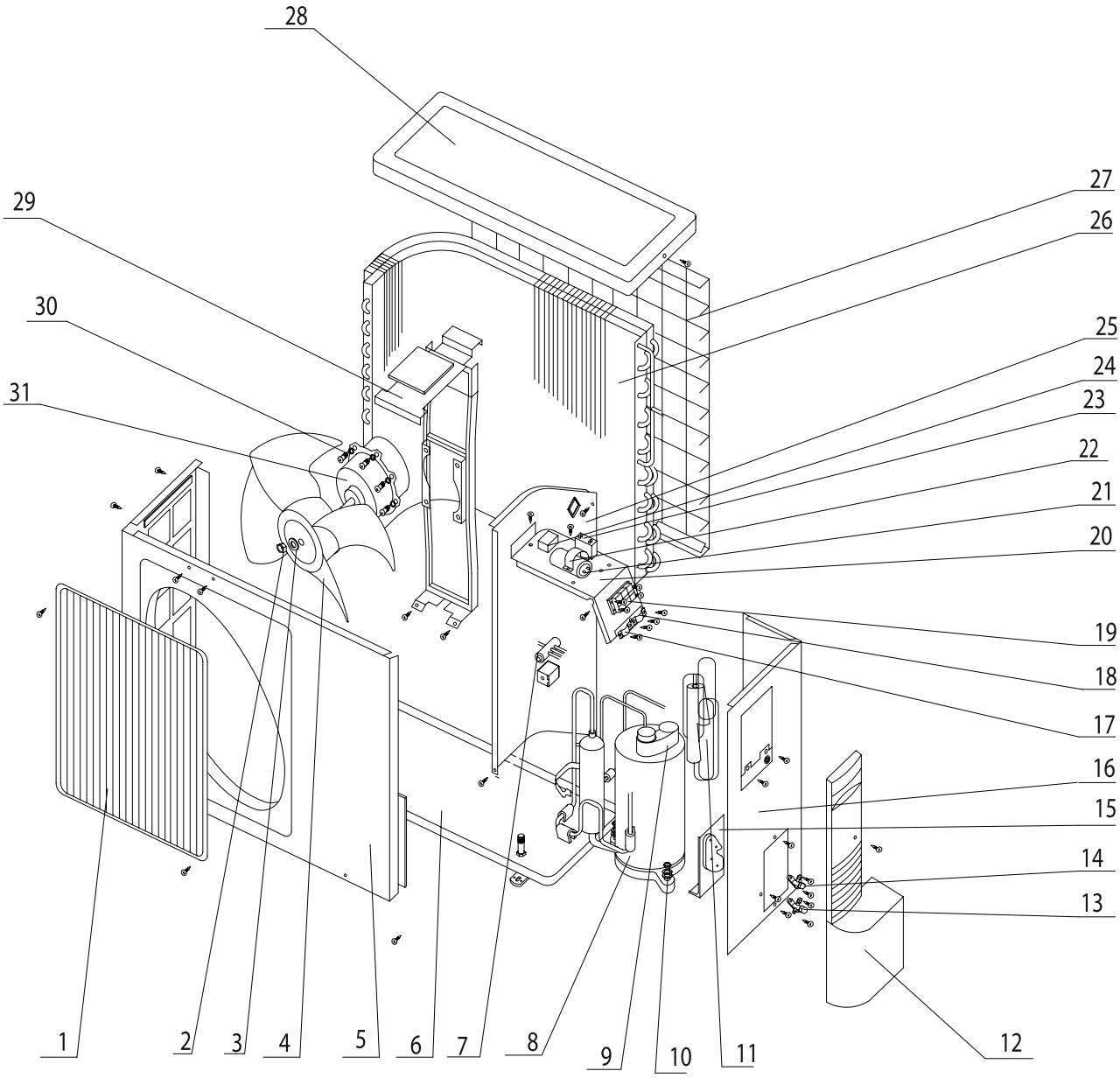

8. 10 Parts list of outdoor unit

No	Description	Part Code		Qty
		GWCN09B8NK3BA/O	GWHN09B8NK3BA/O	
1	Front Grill	22413431	22413431	1
2	Nut M6	70310132	70310131	1
3	Washer	70410224	70410221	1
4	Axial Flow Fan	10333413	10333413	1
5	Front Plate	01533012	015330121	1
6	Metal Base	01203169	01203514	1
7	4-way Valve	/	430004022	/
	4-way Valve Coil	/	43000400	/
8	Compressor	00100368	00120221	1
9	Overload Protector	00180019	00180085	1
10	81926920112000x	76710240	76710247	3
11	Capillary Assy	030033542	03103115	1
12	Handle	26233433	26233433	1
13	Valve 3/8"	07100005	07100005	1
14	Valve 1/4"	07100003	07100003	1
15	Valve Support	01713041	01713041	1
16	Right Side Plate Assy	01302004	01302004	1
17	Wire Clamp	71010103	71010103	1
18	Insulation Gasket	70410525	70410523	1
19	Terminal Board(3位)	42011241	42011241	1
20	Electric Plate	01413425	01413425	1
21	25uF/450V(440V)	33000017	33000018	1
22	Capacitor clamp	02143401	02143401	1
23	Fan Capacitor	33010025	33010026	1
24	Terminal Board 2-8	/	42011103	/
25	Isolation Sheet Assy	01233417	01233417	1
26	Condenser Assy	011032823	01103667	1
27	Rear Grill	01473030	01473030	1
28	Top Cover	01253443	01253443	1
29	Motor Support Assy	017033811	01703391	1
30	Self-tapping Screw	70140259	70140259	4
31	Motor FW30K	15013067	15013067	1

The above data are subject to change without notice.

No	Description	Part Code		Qty
		GWCN12B8NK3BA/O	GWHN12B8NK3BA/O	
1	Front Grill	22413431	22413431	1
2	Nut M6	70310131	70310131	1
3	Washer	70410252	70410252	1
4	Axial Flow Fan	10333413	10333413	1
5	Front Plate	01533012	01533012	1
6	Metal Base	01203179	01203179	1
7	4-way Valve	/	430004022	1
	4-way Valve Coil	/	43000400	1
	4-way Valve Assy	/	030230801	1
8	Capillary Assy	03003354	030033531	1
9	Compressor C-RV133H1A	00100378	00100378	1
10	Compressor Gasket	76710224	76710224	3
11	145－241E	00180043	00180043	1
12	Handle	26233433	26233433	1
13	Valve 1/2"	07100006	07100006	1
14	Valve 1/4"	07100003	07100003	1
15	Valve Support	01713041	01713041	1
16	Right Side Plate Assy	01302004	01302004	1
17	Wire Clamp	71010103	71010103	1
18	Insulation Gasket	70410523	70410523	1
19	Terminal Board T386A	42011241	42011241	1
20	Electric Plate	01413425	01413425	1
21	25uF/450V(440V)	33000017	33000017	1
22	Capacitor clamp	02143401	02143401	1
23	Fan Capacitor 2.5uF/450V	33010026	33010026	1
24	Terminal Board 2-8	/	42011103	1
25	Isolation Sheet Assy	01233417	01233417	1
26	Condenser Assy	01103282	011032813	1
27	Rear Grill	01473030	01473030	1
28	Top Cover	01253443	01253443	1
29	Motor Support	01703391	01703391	1
30	Self-tapping Screw	70140165	70140165	4
31	Motor FW30K	15013067	15013067	1

The above data are subject to change without notice.

8. 11 Explosive view of outdoor unit

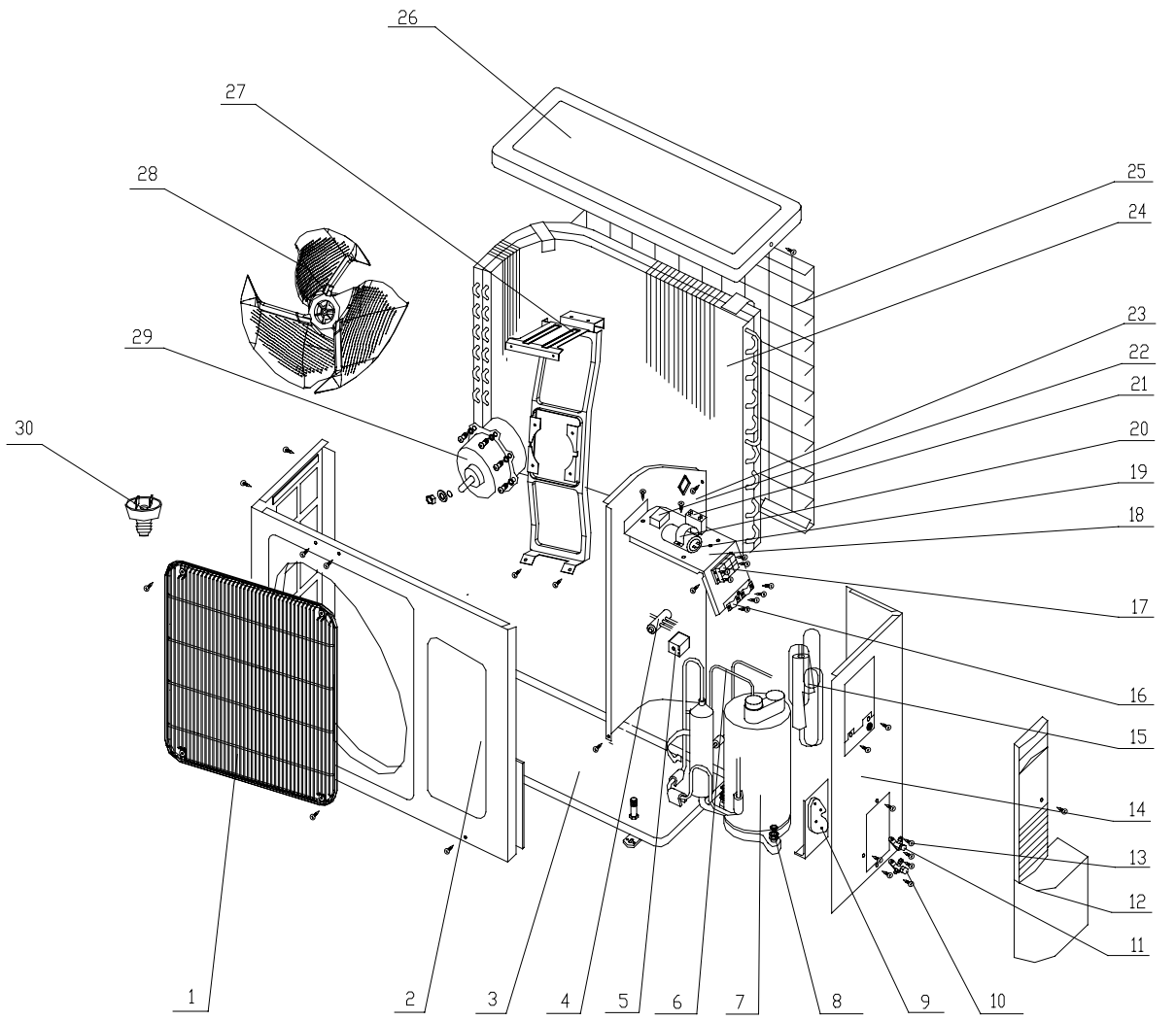

8.12 Parts list of outdoor unit

No	Description	Part Code		Qty
		GWCN12B7NK1CA/O	GWHN12B7NK1CA/O	
1	Front Grill	22413431	22413431	1
2	Front Plate	01533012	1533012	1
3	Metal Base	012032453	12030081	1
4	4-way valve	无	43000403	1
5	4-way valve coil	无	43000400	1
6	4-way rever -sing valve component	无	3023550	1
7	Compressor C-RV146H1A	00102002	100339	1
8	Compressor Gasket	自带	自带	3
9	Valve Support	01713041	1713041	1
10	Valve 1/2"	07100147	7100147	1
11	Valve 1/4"	07100024	7100120	1
12	Big Handle	26233433	26233433	1
13	Tapping Screw	70140165	70140165	1
14	Right Side Plate	01303048	1303048	1
15	Capillary Assy	03103074	3103072	1
16	Wire Clamp	71010103	71010103	1
17	Terminal Board	42011241	42011241	1
18	Electric Box	01413425	1413425	1
19	Comp Capacitor	33010743	33000018	1
20	Capacitor Clamp	02143401	2143401	1
21	Fan Capacitor	33010027	33010027	1
22	Terminal Board (2-8)	无	42011103	1
23	Isolation Sheet Assy	01233417	1233417	1
24	Condenser Assy	01103173	11350051	1
25	Rear Grill	01473030	1473030	1
26	Top Cover Plate	01253443	1253443	1
27	Motor Support	01703020	1703020	1
28	Axial Flow Fan	10333414	10333414	1
29	Motor FW30K	15013067	15013067	1
30	Drainage Connecter	无	6123401	1

The above data are subject to change without notice.

No	Description	Part Code		Qty
		GWCN12B7NK3CA/O	GWHN12B7NK3CA/O	
1	Front Grill	22413431	22413431	1
2	Front Plate	015330121	015330121	1
3	Metal Base	01203179	01203179	1
4	4-way valve	无	430004022	1
5	4-way valve coil	无	43000400	1
6	4-way rever -sing valve component	无	030230801	1
7	Compressor C-RV146H1A	00100369	00100369	1
8	Compressor Gasket	自带	自带	3
9	Valve Support	01713041	01713041	1
10	Valve 1/2"(R410A)	07100006	07100006	1
11	Valve 1/4"(R410A)	07100003	07100003	1
12	Big Handle	26233433	26233433	1
13	Tapping Screw	70140165	70140165	1
14	Right Side Plate	01303048	01303048	1
15	Capillary Assy	03003354	03003353	1
16	Wire Clamp	71010103	71010103	2
17	Terminal Board	42011241	42011241	1
18	Electric Box	01413425	01413425	1
19	Comp Capacitor	33000017	33000017	1
20	Capacitor Clamp	02143401	02143401	1
21	Fan Capacitor	33010027	33010027	1
22	Terminal Board (2-8)	无	42011103	1
23	Isolation Sheet Assy	01233417	01233417	1
24	Condenser	01133393	01133392	1
25	Rear Grill	01473030	01473030	1
26	Top Cover Plate	01253443	01253443	1
27	Motor Support	01703391	01703391	1
27	Motor Support	017030521	017030521	1
28	Axial Flow Fan	10333414	10333414	1
29	Motor FW48G	15013066	15013066	1
30	Drainage Connecter	无	06123401	1

The above data are subject to change without notice.

9 Failure and analysis

Air conditioner can not start up

- **Trip of breaker or blow of fuse**
  - The breaker trips at once when it is set to "ON". → Measure insulation resistance to ground to see if there is any leakage.
  - The breaker trips in few minutes when it is set to "ON" → The circuit or the part of the air conditioner has malfunction. They heat and break the insulation and lead to short circuit or creepage. Measure the insulation resistance or eliminate the malfunction one by one. If the breaker itself has malfunction, then replace the breaker.
- **The air conditioner does not react after it is powered (after the plug is inserted, the buzzer does not sound and the remote startup has no response)**
  - No power → Check power supply circuit.
  - Power plug is not well plugged in and poor connection → Check if the plug is properly plugged in and make the loose contact firm.
  - Fuse of controller burnt out → Change controller fuse
  - The transformer connection is loose or has bad contact or the transformer has malfunction → Fasten the wiring; measure the output voltage of the transformer, if it is incorrect, change the transformer
  - Controller is broken → Check remote controller
- **The remote controller does not receive signals (after it is powered, the buzzer will sound, unless it has malfunction)**
  - Remote controller is short of power → Change batteries
  - Remote controller malfunction
  - Receiver loose or poor connection
  - Receiver is broken

  → First, press the manual switch button AUTO, if there is no response,check based on the above methods. If it runs normally after pressing the button,check again whether the installation position and the connection wire of the reception head is correct. If it is correct,then replace the receiver or the remote controller.
- **Power voltage is too low** → Check the voltage. If it is lower than 10£¥ of the rated voltage, check the cause, improve the power supply condition and add the stabilized voltage power supply.

In cool, heat mode,the outdoor unit and compressor will not run.

- Controller malfunction (IC2003 broken, creepage of parallel capacitor of relay loop, relay is broken etc.) → Change controller
- Wire loose or wrong connection → Correctly wire according to the drawing
- Improper setting of temperature → Adjust setting temp.

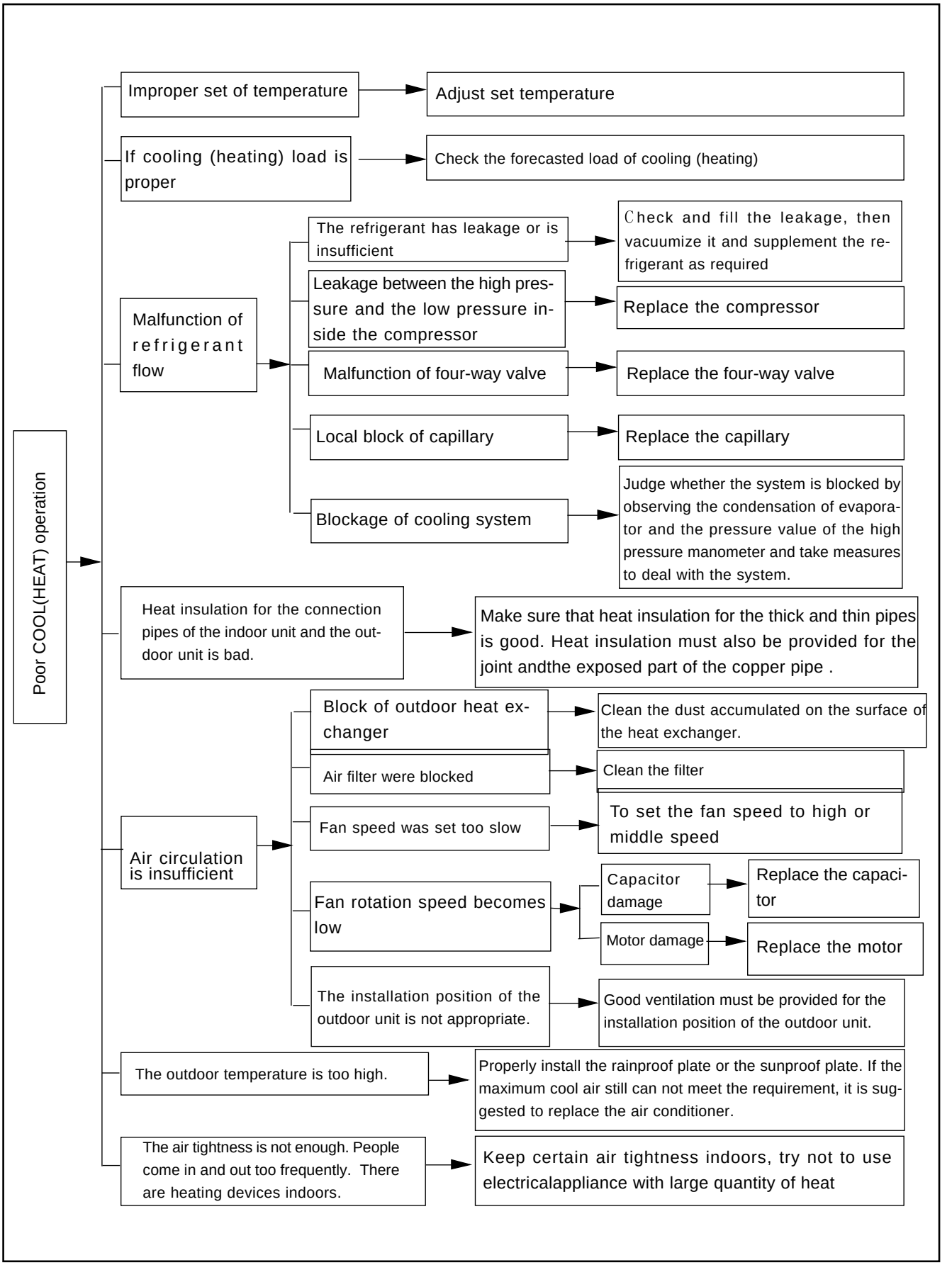
Poor COOL(HEAT) operation
Improper set of temperature
Adjust set temperature
If cooling (heating) load is proper
Check the forecasted load of cooling (heating)
Malfunction of refrigerant flow
The refrigerant has leakage or is insufficient
Check and fill the leakage, then vacuumize it and supplement the refrigerant as required
Leakage between the high pressure and the low pressure inside the compressor
Replace the compressor
Malfunction of four-way valve
Replace the four-way valve
Local block of capillary
Replace the capillary
Blockage of cooling system
Judge whether the system is blocked by observing the condensation of evaporator and the pressure value of the high pressure manometer and take measures to deal with the system.
Heat insulation for the connection pipes of the indoor unit and the outdoor unit is bad.
Make sure that heat insulation for the thick and thin pipes is good. Heat insulation must also be provided for the joint andthe exposed part of the copper pipe .
Air circulation is insufficient
Block of outdoor heat exchanger
Clean the dust accumulated on the surface of the heat exchanger.
Air filter were blocked
Clean the filter
Fan speed was set too slow
To set the fan speed to high or middle speed
Fan rotation speed becomes low
Capacitor damage
Replace the capacitor
Motor damage
Replace the motor
The installation position of the outdoor unit is not appropriate.
Good ventilation must be provided for the installation position of the outdoor unit.
The outdoor temperature is too high.
Properly install the rainproof plate or the sunproof plate. If the maximum cool air still can not meet the requirement, it is suggested to replace the air conditioner.
The air tightness is not enough. People come in and out too frequently. There are heating devices indoors.
Keep certain air tightness indoors, try not to use electricalappliance with large quantity of heat

The fan does not run when it is set to supply air.	The indoor fan motor is burned or breaks or has the heat protector malfunction.	Replace the fan motor or the defective part.
	The built-in heat protector of the motor breaks frequently because the motor is abnormal.	Replace the fan motor
	Wrong connection	Make the correction connection based on the circuit drawing.
	The fan capacitor has open circuit or is damaged.	Replace the fan capacitor of the same type and same specification.
In the cooling and heating mode, the compressor runs, but the outdoor fan does not run.	The outdoor fan motor is damaged.	Replace the fan motor
	Wrong connection	Make the correct connection based on the circuit drawing
	The outdoor fan capacitor is damaged.	Replace the fan capacitor
The compressor is too hot and leads to the action of the protector.	Malfunction of compressor	Replace the compressor
	Breakage of running capacitor of compressor	Replace the capacitor
	The voltage is too low or too high.	Manostat is recommended.
	Wrong wire connection	Connect the circuit diagram correctly
	The protector itself has malfunction.	Use the multimeter to check whether the contact of the compressor is on when it is not overheated. If it is not on, then replace the protector
The compressor is too hot and leads to the action of the protector.	The refrigerant is not enough or is too much.	Adjust the volume of the refrigerant
	The capillary is blocked and the temperature rises.	Replace the capillary
	The compressor does not run smoothly or is stuck. The air discharge valve is damaged	Replace the compressor
	The protector itself has malfunction.	Replace the protector
The swing fan does not run.	The torque of the swing motor is not enough	First, check whether the connection is wrong. If no, replace the parts
	Wrong connection	
	The controller is damaged(IC2003 is damaged, the swing relay can not close, etc)	

Water leakage	Drainage pipe blocked or broken	Change drainage pipe
	Wrap of refrigerant pipe joint is not close enough.	Re-wrap and make it tight.
Abnormal sound and shake	Fan of indoor unit contacts other parts	Adjust fan location.
	Foreign object in indoor unit	Take out the foreign object.
	Compressor shakes too much.	Adjust support washer of compressor, and tighten loosen screws.
	Touch of pipeline of outdoor unit	Separate the touching pipeline.
	Touch of inner plates	1. Tighten connect screw. 2. Stick absorbing clay between plates.
	Louver of outdoor unit touched outer case.	Adjust location of louver.
	Abnormal sound inside compressor	Change compressor
	Abnormal solenoid sound from 4-way valve when heating	Circuit-short inside solenoid of the valve and change the solenoid valve.

There are no heating malfunctions in the above for the cooling only unit.