Technical Sales Guide

DC INVERTER ROOFTOP PACKAGED AIR CONDITIONERS

(GC202010-I)

CAPACITY RANGE:22.0~105.0kW (75100~358300Btu/h)

OPERATION RANGE: COOLING:18~52°C

HEATING:-10~24°C

GREE ELECTRIC APPLIANCES, INC. OF ZHUHAI

CONTENTS

1 PRODUCT LIST

Model	Product Code	Nominal Capacity (Ton)	Refrigerant	Power Supply	Appearance
GK-H5.5TH/NaA-X(L)	EJ51001030	5.5	R410A	380-415V 3N~ 50/60Hz	
GK-H6.2TH/NaA-X(L)	EJ51000990	6.2	R410A	380-415V 3N~ 50/60Hz	
GK-H7.5TH/NaA-X(L)	EJ51001010	7.5	R410A	380-415V 3N~ 50/60Hz	
GK-H10TH/NaA-X(L)	EJ51001090	10	R410A	380-415V 3N~ 50/60Hz	
GK-H15TH/NaA-M(L)	EJ51001080	15	R410A	380-415V 3N~ 50Hz	
GK-H20TH/NaA-M(L)	EJ51001000	20	R410A	380-415V 3N~ 50Hz	

Model	Product Code	Nominal Capacity (Ton)	Refrigerant	Power Supply	Appearance
GK-H25TH/NaA-M(L)	EJ51000980	25	R410	380-415V 3N~ 50Hz	
GK-C30TH/NaA-M(L)	EJ51001100	30	R410	380-415V 3N~ 50Hz	

2 NOMENCLATURE

GK	-	H	10	T	H	Na	A	X	(L)
1	-	2	3	4	5	6	7	8	9

No.	Description	Options
1	Product Category	GK=GREE Rooftop Packaged Air-conditioner
2	Product Function Code	Product Function Code; C = Cooling only type; H = Heat pump type.
3	Cooling/Heating Capacity	05=5Ton; 10=10Ton.....
4	Operating Condition	T=T3 Condition; N=T1 Condition.
5	Airflow Options	H=Horizontal; C=Convertible.
6	Refrigerant Options	1=R22; 2=R407C; 3=R410A.
7	Design Code	A,B,C.....

No.	Description	Options
8	Voltage Options	M=380-415V,50Hz,3Ph X=380-415V,50/60Hz,3Ph
9	Sales Region	U=North America S=Saudi Arabia L=Latin America

3 PRODUCT FEATURES

3.1 Description

The Gree Rooftop C series are completely assembled, piped and wired at the factory to provide one-piece shipment and rigging. Each unit is pressurized with a holding charge of refrigerant-410A for storage and shipping. The Gree Rooftop C series can offer the perfect combination of superior product quality, high operating efficiency and cost efficiency. The compact design, outstanding anti-corrosive cabinet and quiet operation make these units suitable for both light commercial and residential applications. From dedicated design of each part to the unit assembling, together with complete test, the unit offers reliable operation and comfort experience. Comprehensive protections can guarantee the system safety and prevent damage of critical components such as compressor under harsh working conditions. All sheet metal parts are constructed of commercial grade galvanized steel. The unit external parts are coated with special paint to ensure anti-corrosion performance.

3.2 Features

3.2.1 High energy efficiency and performance

◆ DC inverter design

The Gree Rooftop unit meets CB requirements. The compressor and outdoor fan can adjust the operating frequency according to different room loads, and automatically adjust the capacity output to ensure the comfort of the room environment. At the same time, the power consumption of the unit changes along with the capacity output and the power consumption of unit is low in low-load operation. Compared with the fixed-speed unit, its annual power consumption is lower, which is high-efficiency and power-saving.

◆ DC inverter motor

The outdoor heat exchanger applies DC inverter motor with high back electromotive force. Power input of motor is lower and operating current is smaller, thus the efficiency is greatly improved compared with the AC motor.

◆ High efficiency fan blade

New high-efficiency fan blade design adopts CFD simulation technology to optimize the matching of blade type and blade angle. In addition to the special trail edge design, the working area of blade is effectively increased and the air volume is greatly increased.

3.2.2 High reliability

◆ Excellent grid adaptability

The Gree Rooftop C series adopts anti-grid fluctuations design, performs stably in ultra wide voltage range from 342V to 456V, which is perfectly adapted to the power grid fluctuation during peak hours or other conditions.

◆ Multiple protection design

The Gree Rooftop C series unit is designed with high voltage protection, low voltage protection, over-current protection, discharge protection, phase sequence protection and other protections. It can effectively protect key components such as compressor and motor in abnormal operation and harsh working conditions, extending the service life of the unit and ensuring safer and more reliable operation.

◆ Automatic adjustment of throttling

The Gree Rooftop C series unit adopts throttling of electronic expansion valve, and automatically adjusts the opening degree in throttling according to the system high pressure and discharge temperature. It makes sure that the system parameters are within a reasonable range when the unit operates under all working conditions, to improve the operation reliability and service life of the unit.

Anti-crossflow design of outdoor fan

The outdoor fan of the Gree Rooftop C series unit adopts Anti-crossflow startup design to solve the problem that the unit cannot start smoothly in the reverse operation under the high wind environment. The Anti-crossflow startup design allows the unit to fully adapt to the harsh windy environment and start reliably. The outdoor fan runs smoothly, which is safer and more reliable.

3.2.3 Anti-corrosive and dustproof

◆ Weather fastness fan blade

The fan blades of the condenser fan are directly injection molded with ABS+glass fiber material, which has excellent weather fastness and anti-corrosive performance.

3.2.4 Easy to use

◆ Non-polarity communication design

The Gree Rooftop C series unit adopts two-core Non-polarity communication. System anti-electromagnetic interference capability is strong, and the communication distance between the wired controller and the unit can reach 100m. The field wiring does not need to distinguish the positive and negative poles. Meanwhile, conventional communication wire and telephone wire can be adopted, with no need of special shielded communication wire.

◆ Auxiliary controller

The Gree Rooftop C series unit can be connected to centralized controller. One centralized controller can control up to 36 units, and realize single unit control or group control for multiple units. It can also be used with MODBUS gateway to remotely control the unit, or to be managed with other electrical equipment in the building.

4 PRODUCT DATA

4.1 Product Data at Rated Condition

Model		GK-H5.5TH/NaA-X(L)	GK-H6.2TH/NaA-X(L)
Ton		5.5	6.2
Capacity			
Cooling Capacity (T1)	Btu/h	75100	78500
Cooling Capacity (T1)	kW	22.0	23.0
Cooling Capacity (T3)	Btu/h	64800	68200
Cooling Capacity (T3)	kW	19.0	20
Heating Capacity	Btu/h	88700	95500
Heating Capacity	kW	26.0	28
COP	W/W	3.47	3.73
Electrical Data			
Power Supply		380-415V 3N~ 50/60Hz	380-415V 3N~ 50/60Hz
Cooling Power Input (T1)	kW	8.5	8.5
Cooling Power Input (T3)	kW	10.0	10.0
Heating Power Input	kW	7.5	7.5
Max. Power Input	kW	10.0	10.0
Max. Current	A	18.0	18.0
Sound			
Sound Pressure Level	dB(A)	66	66
Refrigerant			
Refrigerant Type	-	R410A	R410A
Refrigerant Weight	kg	5	5
Air Flow			
Air Flow Volume	CFM	1766	1766
Air Flow Volume	m^3/h	3000	3000
Pressure			
External Static Pressure	Pa	60	60
External Static Pressure	InWg	0.24	0.24
External Static Pressure Range	Pa	0-180	0-180
External Static Pressure Range	InWg	0-0.72	0-0.72
Evaporator			
Evaporator Material	-	Copper tube-Aluminum fin	Copper tube-Aluminum fin
Evaporator Face Area	sq.ft	4.31	4.31
Evaporator Face Area	m^2	0.40	0.40
Evaporator Fins per Inch	-	16	16
Drainage Connection Size	inch	3/4"(NPT)	3/4"(NPT)
Evaporator Number of Rows	-	4	4
Evaporator Fan			
Fan Motor Drive Type	-	Direct Drive	Direct Drive
Fan Motor Power Output	kW	0.75	0.75
Fan Type	-	Centrifugal	Centrifugal
Fan Quantity	-	2	2
Motor Safe Class	-	IP23	IP23
Condenser			
Condenser Material	-	Copper tube-Aluminum fin	Copper tube-Aluminum fin

Model		GK-H5.5TH/NaA-X(L)	GK-H6.2TH/NaA-X(L)
Ton		5.5	6.2
Condenser Face Area	sq.ft	13.89	13.89
Condenser Face Area	m^2	1.29	1.29
Condenser Fins per Inch	-	16	16
Condenser Number of Rows	-	3	3
Condenser Fan			
Fan Motor Drive Type	-	Direct Drive	Direct Drive
Fan Motor Power Output	kW	0.75	0.75
Fan Type	-	Axial-flow	Axial-flow
Fan Quantity	-	1	1
Motor Safe Class	-	IP56	IP56
Compressor			
Compressor Type	-	Inverter Rotary	Inverter Rotary
Compressor Quantity	-	1	1
Number of Refrigerant Circulation System	-	1	1
Filter			
Air Filter Material	-	PP	PP
Dimension			
Outline Dimension(W×D×H)	mm	1450×1120×815	1450×1120×815
Package Dimension(W×D×H)	mm	1463×1133×860	1463×1133×860
Weight			
Net Weight	kg	268	268
Gross Weight	kg	289	289
Loading			
Loading Quantity	20'GP	16	16
Loading Quantity	40'HQ	48	48

Model		GK-H7.5TH/NaA-X(L)	GK-H10TH/NaA-X(L)
Ton		7.5	10
Capacity			
Cooling Capacity (T1)	Btu/h	98900	116000
Cooling Capacity (T1)	kW	29.0	34.0
Cooling Capacity (T3)	Btu/h	78500	98900
Cooling Capacity (T3)	kW	23.0	29.0
Heating Capacity	Btu/h	109200	133100
Heating Capacity	kW	32.0	39.0
COP	W/W	3.63	3.4
Electrical Data			
Power Supply	-	380-415V 3N~ 50/60Hz	380-415V 3N~ 50/60Hz
Cooling Power Input (T1)	kW	9.0	13.5
Cooling Power Input (T3)	kW	10.0	14.0
Heating Power Input	kW	8.0	11.5
Max. Power Input	kW	10.0	15.0
Max. Current	A	18.0	23.0
Sound			
Sound Pressure Level	dB(A)	68	72

ROOFTOP PACKAGED AIR CONDITIONERS

Model		GK-H7.5TH/NaA-X(L)	GK-H10TH/NaA-X(L)
Ton		7.5	10
Refrigerant			
Refrigerant Type	-	R410A	R410A
Refrigerant Weight	kg	8.0	10.0
Air Flow			
Air Flow Volume	CFM	2589	3413
Air Flow Volume	m^3/h	4400	5800
Pressure			
External Static Pressure	Pa	80	90
External Static Pressure	InWg	0.32	0.36
External Static Pressure Range	Pa	0-210	0-210
External Static Pressure Range	InWg	0-0.84	0-0.84
Evaporator			
Evaporator Material	-	Copper tube-Aluminum fin	Copper tube-Aluminum fin
Evaporator Face Area	sq.ft	7.00	7.00
Evaporator Face Area	m^2	0.65	0.65
Evaporator Fins per Inch	-	16	16
Drainage Connection Size	inch	3/4"(NPT)	3/4"(NPT)
Evaporator Number of Rows	-	4	4
Evaporator Fan			
Fan Motor Drive Type	-	Direct Drive	Direct Drive
Fan Motor Power Output	kW	1.5	1.5
Fan Type	-	Centrifugal	Centrifugal
Fan Quantity	-	2	2
Motor Safe Class	-	IP20	IP20
Condenser			
Condenser Material	-	Copper tube-Aluminum fin	Copper tube-Aluminum fin
Condenser Face Area	sq.ft	25.19	25.19
Condenser Face Area	m^2	2.34	2.34
Condenser Fins per Inch	-	16	16
Condenser Number of Rows	-	3	3
Condenser Fan			
Fan Motor Drive Type	-	Direct Drive	Direct Drive
Fan Motor Power Output	kW	1.5	1.5
Fan Type	-	Axial-flow	Axial-flow
Fan Quantity	-	1	1
Motor Safe Class	-	IP24	IP24
Compressor			
Compressor Type	-	Inverter Rotary	Inverter Rotary
Compressor Quantity	-	1	1
Number of Refrigerant Circulation System	-	1	1
Filter			
Air Filter Material	-	PP	PP
Dimension			
Outline Dimension(W×D×H)	mm	1450×1120×1215	1450×1120×1215
Package Dimension(W×D×H)	mm	1463×1133×1260	1463×1133×1260
Weight			
Net Weight	kg	348	350

Model		GK-H7.5TH/NaA-X(L)	GK-H10TH/NaA-X(L)
Ton		7.5	10
Gross Weight	kg	368	370
Loading			
Loading Quantity	20'GP	7	7
Loading Quantity	40'HQ	32	32

Model		GK-H15TH/NaA-M(L)	GK-H20TH/NaA-M(L)
Ton		15	20
Capacity			
Cooling Capacity (T1)	Btu/h	170900	216700
Cooling Capacity (T1)	kW	50.1	63.5
Cooling Capacity (T3)	Btu/h	126200	175700
Cooling Capacity (T3)	kW	37.0	51.5
Heating Capacity	Btu/h	191100	264400
Heating Capacity	kW	56.0	75
COP	W/W	3.39	3.0
Electrical Data			
Power Supply	-	380-415V 3N~ 50Hz	380-415V 3N~ 50Hz
Cooling Power Input (T1)	kW	23.0	28.5
Cooling Power Input (T3)	kW	22.0	30.0
Heating Power Input	kW	16.5	25.0
Max. Power Input	kW	26.0	30.0
Max. Current	A	44.0	51.0
Sound			
Sound Pressure Level	dB(A)	74	76
Refrigerant			
Refrigerant Type	-	R410A	R410A
Refrigerant Weight	kg	12.0	16.0
Air Flow			
Air Flow Volume	CFM	5588	8824
Air Flow Volume	m^3/h	9500	15000
Pressure			
External Static Pressure	Pa	130	150
External Static Pressure	InWg	0.52	0.60
External Static Pressure Range	Pa	130/200	150 / 220
External Static Pressure Range	InWg	0.52/0.8	0.6/0.88
Evaporator			
-	-	Copper tube-Aluminum fin	Copper tube-Aluminum fin
Evaporator Face Area	sq.ft	10.12	12.32
Evaporator Face Area	m^2	0.94	1.15
Evaporator Fins per Inch	-	18	16
Drainage Connection Size	inch	3/4"(NPT)	3/4"(NPT)
Evaporator Number of Rows	-	4	4
Evaporator Fan			
Fan Motor Drive Type	-	Belt	Belt
Fan Motor Power Output	kW	4	5.5
Fan Type	-	Centrifugal	Centrifugal
Fan Quantity	-	1	2

ROOFTOP PACKAGED AIR CONDITIONERS

Model		GK-H15TH/NaA-M(L)	GK-H20TH/NaA-M(L)
Ton		15	20
Motor Safe Class	-	IP55	IP55
Condenser			
Condenser Material	-	Copper tube-Aluminum fin	Copper tube-Aluminum fin
Condenser Face Area	sq.ft	26.16	34.22
Condenser Face Area	m^2	2.43	3.18
Condenser Fins per Inch	-	16	16
Condenser Number of Rows	-	3	3
Condenser Fan			
Fan Motor Drive Type	-	Direct Drive	Direct Drive
Fan Motor Power Output	kW	1.5	1.5
Fan Type	-	Axial-flow	Axial-flow
Fan Quantity	-	1	2
Motor Safe Class	-	IP24	IP24
Compressor			
Compressor Type	-	Inverter Rotary	Inverter Rotary
Compressor Quantity	-	2	2
Number of Refrigerant Circulation System	-	1	1
Filter			
Air Filter Material	-	PP	PP
Dimension			
Outline Dimension(W×D×H)	mm	2260×1140×1245	2240×1880×1250
Package Dimension(W×D×H)	mm	2283×1163×1290	2258×1898×1300
Weight			
Net Weight	kg	590	820
Gross Weight	kg	618	870
Loading			
Loading Quantity	20'GP	4	3
Loading Quantity	40'HQ	20	12

Model		GK-H25TH/NaA-M(L)	GK-C30TH/NaA-M(L)
Ton		25	30
Capacity			
Cooling Capacity (T1)	Btu/h	303700	358300
Cooling Capacity (T1)	kW	89	105.0
Cooling Capacity (T3)	Btu/h	206400	296800
Cooling Capacity (T3)	kW	60.5	87.0
Heating Capacity	Btu/h	344600	/
Heating Capacity	kW	101	/
COP	W/W	3.31	/
Electrical Data			
Power Supply		380-415V 3N~ 50Hz	380-415V 3N~ 50Hz
Cooling Power Input (T1)	kW	38.0	34.0
Cooling Power Input (T3)	kW	32.5	36.0
Heating Power Input	kW	30.5	/
Max. Power Input	kW	43.0	43.0
Max. Current	A	73.0	73.0
Sound			
Sound Pressure Level	dB(A)	76	78

Model		GK-H25TH/NaA-M(L)	GK-C30TH/NaA-M(L)
Ton		25	30
Refrigerant			
Refrigerant Type	-	R410A	R410A
Refrigerant Weight	kg	25.0	15.0+15.0
Air Flow			
Air Flow Volume	CFM	9706	10887.25
Air Flow Volume	m^3/h	16500	18500
Pressure			
External Static Pressure	Pa	200	250
External Static Pressure	InWg	0.8	1
External Static Pressure Range	Pa	200 / 250	250/320
External Static Pressure Range	InWg	0.8/1	1/1.2
Evaporator			
Evaporator Face Area	sq.ft	27.45	21.313
Evaporator Face Area	m^2	2.55	1.98
Evaporator Fins per Inch	-	18	18
Drainage Connection Size	inch	3/4"(NPT)	3/4"(NPT)
Evaporator Number of Rows	-	4	4
Evaporator Fan			
Fan Motor Drive Type	-	Belt	Belt
Fan Motor Power Output	kW	5.5	5.5
Fan Type	-	Centrifugal	Centrifugal
Fan Quantity	-	1	1
Motor Safe Class	-	IP55	IP55
Condenser			
Condenser Material	-	Copper tube-Aluminum fin	Copper tube-Aluminum fin
Condenser Face Area	sq.ft	51.88	86.758
Condenser Face Area	m^2	4.82	8.06
Condenser Fins per Inch	-	17	16
Condenser Number of Rows	-	3	3
Condenser Fan			
Fan Motor Drive Type	-	Direct Drive	Direct Drive
Fan Motor Power Output	kW	1.5	1.5
Fan Type	-	Axial-flow	Axial-flow
Fan Quantity	-	2	4
Motor Safe Class	-	IP56	IP56
Compressor			
Compressor Type	-	Inverter Rotary	Inverter Scroll / Constant Speed Scroll
Compressor Quantity	-	2	2+2
Number of Refrigerant Circulation System	-	1	2
Filter			
Air Filter Material	-	PP	PP
Dimension			
Outline Dimension(W×D×H)	mm	2880×2240×1270	3800×2240×1250
Package Dimension(W×D×H)	mm	2893×2253×1290	3810×2250×1283
Weight			
Net Weight	kg	1180	1500
Gross Weight	kg	1224	1550
Loading			
Loading Quantity	20'GP	1	1
Loading Quantity	40'HQ	8	6

Notices:

- The T1 cooling capacity stated above is measured under following conditions.

  Indoor Conditions: 27°C (80.6 °F) DB/19°C (66.2 °F)WB;

  Outdoor Conditions: 35°C (95°F) DB/24°C (75.2°F)WB;
- The T3 cooling capacity stated above is measured under following conditions.

  Indoor Conditions: 29°C (84.2 °F) DB/19°C (66.2 °F)WB;

  Outdoor Conditions: 46°C (114.8°F) DB/24°C (75.2°F)WB;
- The air volume is measured at the relevant standard external static pressure.
- The technical parameters are changed along with the products improvement; please refer to the name plate of the unit for actual data.

4.2 Working Range

Mode	Range of Outdoor Temperature°C(°F)
Cooling	18(64.4) ~ 52(125.6)
Heating	-10(14) ~ 24(75.2)

5 CAPACITY CORRECTION

Model：GK-H5.5TH/NaA-X(L)

Outdoor Air DBT		Air Flow Rate		Entering Air DBT		Indoor Air Wet Bulb Temperature°C (°F)														
						17°C(62.6°F)					19°C(66.2°F)					22°C(71.6°F)				
						TC		SCC		PI	TC		SCC		PI	TC		SCC		PI
°C	°F	m³/hr	cfm	°C	°F	kW	Mbh	kW	Mbh	kW	kW	Mbh	kW	Mbh	kW	kW	Mbh	kW	Mbh	kW
27	80.6	3000	1766	24	75.2	20.66	70.51	17.77	60.64	7.40	22.22	75.81	17.11	58.38	7.48	23.11	78.85	16.18	55.19	7.55
				27	80.6	20.87	71.21	17.95	61.24	7.48	22.44	76.57	17.28	58.96	7.57	23.34	79.63	16.34	55.74	7.63
				29	84.2	20.87	71.21	17.95	61.24	7.57	22.44	76.57	17.28	58.96	7.65	23.34	79.63	16.34	55.74	7.72
				31	87.8	21.07	71.90	18.12	61.84	7.65	22.66	77.32	17.45	59.53	7.74	23.57	80.41	16.50	56.29	7.80
35	95	3000	1766	24	75.2	20.26	69.11	17.42	59.44	8.41	21.78	74.31	16.77	57.22	8.50	22.65	77.29	15.86	54.10	8.58
				27	80.6	20.46	69.81	17.60	60.04	8.41	22.00	75.06	16.94	57.80	8.50	22.88	78.07	16.02	54.65	8.58
				29	84.2	20.66	70.51	17.77	60.64	8.57	22.22	75.81	17.11	58.38	8.67	23.11	78.85	16.18	55.19	8.75
				31	87.8	20.87	71.21	17.95	61.24	8.74	22.44	76.57	17.28	58.96	8.84	23.34	79.63	16.34	55.74	8.92
46	114.8	3000	1766	24	75.2	17.80	60.73	15.31	52.23	9.67	19.14	65.31	14.74	50.29	9.78	19.91	67.92	13.93	47.54	9.86
				27	80.6	18.00	61.43	15.48	52.83	9.84	19.36	66.06	14.91	50.86	9.95	20.13	68.70	14.09	48.09	10.03
				29	84.2	18.00	61.43	15.48	52.83	9.92	19.36	66.06	14.91	50.86	10.03	20.13	68.70	14.09	48.09	10.12
				31	87.8	18.21	62.13	15.66	53.43	10.00	19.58	66.81	15.08	51.44	10.12	20.36	69.48	14.25	48.64	10.21
52	125.6	3000	1766	24	75.2	14.94	50.96	12.84	43.83	9.08	16.06	54.80	12.37	42.19	9.18	16.70	56.99	11.69	39.89	9.26
				27	80.6	15.35	52.36	13.20	45.03	9.16	16.50	56.30	12.71	43.35	9.27	17.16	58.55	12.01	40.98	9.35
				29	84.2	15.75	53.75	13.55	46.23	9.25	16.94	57.80	13.04	44.51	9.35	17.62	60.11	12.33	42.08	9.43
				31	87.8	16.37	55.85	14.08	48.03	9.33	17.60	60.05	13.55	46.24	9.44	18.30	62.45	12.81	43.72	9.52

Model：GK-H6.2TH/NaA-X(L)

Outdoor Air DBT		Air Flow Rate		Entering Air DBT		Indoor Air Wet Bulb Temperature°C (°F)														
						17°C(62.6°F)					19°C(66.2°F)					22°C(71.6°F)				
						TC		SCC		PI	TC		SCC		PI	TC		SCC		PI
°C	°F	m³/hr	cfm	°C	°F	kW	Mbh	kW	Mbh	kW	kW	Mbh	kW	Mbh	kW	kW	Mbh	kW	Mbh	kW
27	80.6	3000	1766	24	75.2	21.60	73.71	18.58	63.39	7.40	23.23	79.26	17.89	61.03	7.48	24.16	82.43	16.91	57.70	7.55
				27	80.6	21.82	74.44	18.76	64.02	7.48	23.46	80.05	18.06	61.64	7.57	24.40	83.25	17.08	58.27	7.63
				29	84.2	21.82	74.44	18.76	64.02	7.57	23.46	80.05	18.06	61.64	7.65	24.40	83.25	17.08	58.27	7.72
				31	87.8	22.03	75.17	18.95	64.65	7.65	23.69	80.83	18.24	62.24	7.74	24.64	84.06	17.25	58.84	7.80
35	95	3000	1766	24	75.2	21.18	72.25	18.21	62.14	8.41	22.77	77.69	17.53	59.82	8.50	23.68	80.80	16.58	56.56	8.58
				27	80.6	21.39	72.98	18.40	62.77	8.41	23.00	78.48	17.71	60.43	8.50	23.92	81.62	16.74	57.13	8.58
				29	84.2	21.60	73.71	18.58	63.39	8.57	23.23	79.26	17.89	61.03	8.67	24.16	82.43	16.91	57.70	8.75
				31	87.8	21.82	74.44	18.76	64.02	8.74	23.46	80.05	18.06	61.64	8.84	24.40	83.25	17.08	58.27	8.92
46	114.8	3000	1766	24	75.2	18.61	63.49	16.00	54.61	9.67	20.01	68.27	15.41	52.57	9.78	20.81	71.01	14.57	49.70	9.86
				27	80.6	18.82	64.22	16.19	55.23	9.84	20.24	69.06	15.58	53.18	9.95	21.05	71.82	14.73	50.27	10.03
				29	84.2	18.82	64.22	16.19	55.23	9.92	20.24	69.06	15.58	53.18	10.03	21.05	71.82	14.73	50.27	10.12
				31	87.8	19.04	64.95	16.37	55.86	10.00	20.47	69.84	15.76	53.78	10.12	21.29	72.64	14.90	50.85	10.21
52	125.6	3000	1766	24	75.2	15.61	53.28	13.43	45.82	9.08	16.79	57.29	12.93	44.11	9.18	17.46	59.58	12.22	41.71	9.26
				27	80.6	16.04	54.74	13.80	47.07	9.16	17.25	58.86	13.28	45.32	9.27	17.94	61.21	12.56	42.85	9.35
				29	84.2	16.47	56.20	14.16	48.33	9.25	17.71	60.43	13.64	46.53	9.35	18.42	62.84	12.89	43.99	9.43
				31	87.8	17.11	58.39	14.72	50.21	9.33	18.40	62.78	14.17	48.34	9.44	19.14	65.29	13.40	45.70	9.52

Model：GK-H7.5TH/NaA-X(L)

Outdoor Air DBT		Air Flow Rate		Entering Air DBT		Indoor Air Wet Bulb Temperature°C (°F)														
						17°C(62.6°F)					19°C(66.2°F)					22°C(71.6°F)				
						TC		SCC		PI	TC		SCC		PI	TC		SCC		PI
°C	°F	m³/hr	cfm	°C	°F	kW	Mbh	kW	Mbh	kW	kW	Mbh	kW	Mbh	kW	kW	Mbh	kW	Mbh	kW
27	80.6	4400	2590	24	75.2	27.24	92.94	23.43	79.93	7.83	29.29	99.94	22.55	76.95	7.92	30.46	103.93	21.32	72.75	7.99
				27	80.6	27.51	93.86	23.66	80.72	7.92	29.58	100.93	22.78	77.71	8.01	30.76	104.96	21.53	73.47	8.08
				29	84.2	27.51	93.86	23.66	80.72	8.01	29.58	100.93	22.78	77.71	8.10	30.76	104.96	21.53	73.47	8.17
				31	87.8	27.78	94.78	23.89	81.51	8.10	29.87	101.92	23.00	78.48	8.19	31.06	105.99	21.75	74.20	8.26
35	95	4400	2590	24	75.2	26.70	91.10	22.96	78.35	8.90	28.71	97.96	22.11	75.43	9.00	29.86	101.88	20.90	71.31	9.08
				27	80.6	26.97	92.02	23.19	79.14	8.90	29.00	98.95	22.33	76.19	9.00	30.16	102.91	21.11	72.03	9.08
				29	84.2	27.24	92.94	23.43	79.93	9.08	29.29	99.94	22.55	76.95	9.18	30.46	103.93	21.32	72.75	9.26
				31	87.8	27.51	93.86	23.66	80.72	9.26	29.58	100.93	22.78	77.71	9.36	30.76	104.96	21.53	73.47	9.44
46	114.8	4400	2590	24	75.2	23.46	80.06	20.18	68.85	10.24	25.23	86.08	19.43	66.29	10.35	26.24	89.53	18.37	62.67	10.44
				27	80.6	23.73	80.98	20.41	69.64	10.41	25.52	87.07	19.65	67.05	10.53	26.54	90.56	18.58	63.39	10.62
				29	84.2	23.73	80.98	20.41	69.64	10.50	25.52	87.07	19.65	67.05	10.62	26.54	90.56	18.58	63.39	10.72
				31	87.8	24.00	81.90	20.64	70.43	10.59	25.81	88.06	19.87	67.81	10.71	26.84	91.59	18.79	64.11	10.81
52	125.6	4400	2590	24	75.2	19.69	67.18	16.93	57.77	9.61	21.17	72.23	16.30	55.62	9.72	22.02	75.12	15.41	52.58	9.81
				27	80.6	20.23	69.02	17.40	59.35	9.70	21.75	74.21	16.75	57.14	9.81	22.62	77.18	15.83	54.03	9.90
				29	84.2	20.77	70.86	17.86	60.94	9.79	22.33	76.19	17.19	58.67	9.90	23.22	79.24	16.26	55.47	9.99
				31	87.8	21.58	73.62	18.56	63.31	9.88	23.20	79.16	17.86	60.95	9.99	24.13	82.32	16.89	57.63	10.08

ROOFTOP PACKAGED AIR CONDITIONERS

Model：GK-H10TH/NaA-X(L)

Outdoor Air DBT		Air Flow Rate		Entering Air DBT		Indoor Air Wet Bulb Temperature°C (°F)														
						17°C(62.6°F)					19°C(66.2°F)					22°C(71.6°F)				
						TC		SCC		PI	TC		SCC		PI	TC		SCC		PI
°C	°F	m³/hr	cfm	°C	°F	kW	Mbh	kW	Mbh	kW	kW	Mbh	kW	Mbh	kW	kW	Mbh	kW	Mbh	kW
27	80.6	5800	3413	24	75.2	34.28	116.97	27.77	94.75	11.76	35.34	120.59	27.57	94.06	11.88	36.76	125.41	25.73	87.79	12.00
				27	80.6	34.63	118.15	28.05	95.70	11.89	35.70	121.81	27.85	95.01	12.02	37.13	126.68	25.99	88.68	12.14
				29	84.2	35.32	120.52	28.61	97.62	12.03	36.41	124.24	28.40	96.91	12.15	37.87	129.21	26.51	90.45	12.27
				31	87.8	36.01	122.88	29.17	99.53	12.16	37.13	126.68	28.96	98.81	12.29	38.61	131.75	27.03	92.22	12.41
35	95	5800	3413	24	75.2	32.65	111.40	26.45	90.24	13.10	33.66	114.85	26.25	89.58	13.23	35.01	119.44	24.50	83.61	13.36
				27	80.6	32.98	112.53	26.71	91.15	13.37	34.00	116.01	26.52	90.49	13.50	35.36	120.65	24.75	84.45	13.64
				29	84.2	33.64	114.78	27.25	92.97	13.63	34.68	118.33	27.05	92.30	13.77	36.07	123.06	25.25	86.14	13.91
				31	87.8	34.30	117.03	27.78	94.79	13.90	35.36	120.65	27.58	94.11	14.04	36.77	125.47	25.74	87.83	14.18
46	114.8	5800	3413	24	75.2	29.06	99.15	23.54	80.31	14.97	29.96	102.21	23.37	79.73	15.12	31.16	106.30	21.81	74.41	15.27
				27	80.6	29.35	100.15	23.78	81.12	15.24	30.26	103.25	23.60	80.53	15.39	31.47	107.38	22.03	75.16	15.54
				29	84.2	29.94	102.15	24.25	82.74	15.37	30.87	105.31	24.07	82.14	15.53	32.10	109.52	22.47	76.67	15.68
				31	87.8	30.53	104.16	24.73	84.37	15.64	31.47	107.38	24.55	83.75	15.80	32.73	111.67	22.91	78.17	15.95
52	125.6	5800	3413	24	75.2	22.86	77.98	18.51	63.17	14.57	23.56	80.39	18.38	62.71	14.72	24.50	83.61	17.15	58.53	14.86
				27	80.6	23.09	78.77	18.70	63.80	14.70	23.80	81.21	18.56	63.34	14.85	24.75	84.45	17.33	59.12	15.00
				29	84.2	23.55	80.34	19.07	65.08	14.84	24.28	82.83	18.94	64.61	14.99	25.25	86.14	17.67	60.30	15.13
				31	87.8	24.01	81.92	19.45	66.36	14.97	24.75	84.45	19.31	65.87	15.12	25.74	87.83	18.02	61.48	15.27

Model：GK-H15TH/NaA-M(L)

Outdoor Air DBT		Air Flow Rate		Entering Air DBT		Indoor Air Wet Bulb Temperature°C (°F)														
						17°C(62.6°F)					19°C(66.2°F)					22°C(71.6°F)				
						TC		SCC		PI	TC		SCC		PI	TC		SCC		PI
°C	°F	m³/hr	cfm	°C	°F	kW	Mbh	kW	Mbh	kW	kW	Mbh	kW	Mbh	kW	kW	Mbh	kW	Mbh	kW
27	80.6	9500	5592	24	75.2	47.06	160.57	40.47	138.1	20.02	50.60	172.65	38.96	132.9	20.24	52.63	179.56	36.84	125.7	20.42
				27	80.6	47.52	162.15	40.87	139.5	20.24	51.10	174.36	39.35	134.3	20.47	53.15	181.33	37.20	126.9	20.65
				29	84.2	47.52	162.15	40.87	139.5	20.47	51.10	174.36	39.35	134.3	20.70	53.15	181.33	37.20	126.9	20.89
				31	87.8	47.99	163.74	41.27	140.8	20.70	51.60	176.07	39.73	135.6	20.93	53.67	183.11	37.57	128.2	21.12
35	95	9500	5592	24	75.2	46.13	157.39	39.67	135.4	22.75	49.60	169.23	38.19	130.3	23.00	51.58	176.00	36.11	123.2	23.21
				27	80.6	46.59	158.98	40.07	136.7	22.75	50.10	170.94	38.58	131.6	23.00	52.10	177.78	36.47	124.5	23.21
				29	84.2	47.06	160.57	40.47	138.1	23.20	50.60	172.65	38.96	132.9	23.46	52.63	179.56	36.84	125.7	23.67
				31	87.8	47.52	162.15	40.87	139.5	23.66	51.10	174.36	39.35	134.3	23.92	53.15	181.33	37.20	126.9	24.14
46	114.8	9500	5592	24	75.2	40.54	138.31	34.86	118.9	26.16	43.59	148.72	33.56	114.5	26.45	45.33	154.67	31.73	108.3	26.69
				27	80.6	41.00	139.90	35.26	120.3	26.61	44.09	150.43	33.95	115.8	26.91	45.85	156.45	32.10	109.5	27.15
				29	84.2	41.00	139.90	35.26	120.3	26.84	44.09	150.43	33.95	115.8	27.14	45.85	156.45	32.10	109.5	27.38
				31	87.8	41.47	141.49	35.66	121.7	27.07	44.59	152.14	34.33	117.2	27.37	46.37	158.22	32.46	110.8	27.62
52	125.6	9500	5592	24	75.2	34.01	116.05	29.25	99.80	24.57	36.57	124.79	28.16	96.09	24.84	38.04	129.78	26.63	90.84	25.06
				27	80.6	34.94	119.23	30.05	102.5	24.79	37.58	128.21	28.93	98.72	25.07	39.08	133.33	27.35	93.33	25.30
				29	84.2	35.88	122.41	30.85	105.3	25.02	38.58	131.62	29.70	101.4	25.30	40.12	136.89	28.08	95.82	25.53
				31	87.8	37.27	127.18	32.06	109.4	25.25	40.08	136.75	30.86	105.3	25.53	41.68	142.22	29.18	99.56	25.76

Model：GK-H20TH/NaA-M(L)

Outdoor Air DBT		Air Flow Rate		Entering Air DBT		Indoor Air Wet Bulb Temperature°C (°F)														
						17°C(62.6°F)					19°C(66.2°F)					22°C(71.6°F)				
						TC		SCC		PI	TC		SCC		PI	TC		SCC		PI
°C	°F	m³/hr	cfm	°C	°F	kW	Mbh	kW	Mbh	kW	kW	Mbh	kW	Mbh	kW	kW	Mbh	kW	Mbh	kW
27	80.6	15000	8829	24	75.2	59.65	203.51	51.30	175.0	24.80	64.14	218.83	49.38	168.5	25.08	66.70	227.58	46.69	159.3	25.31
				27	80.6	60.24	205.53	51.80	176.7	25.09	64.77	221.00	49.87	170.2	25.37	67.36	229.84	47.15	160.9	25.59
				29	84.2	60.24	205.53	51.80	176.7	25.37	64.77	221.00	49.87	170.2	25.65	67.36	229.84	47.15	160.9	25.88
				31	87.8	60.83	207.54	52.31	178.5	25.65	65.41	223.16	50.36	171.8	25.94	68.02	232.09	47.61	162.5	26.17
35	95	15000	8829	24	75.2	58.46	199.48	50.28	171.5	28.19	62.87	214.50	48.41	165.2	28.50	65.38	223.08	45.77	156.1	28.76
				27	80.6	59.06	201.50	50.79	173.3	28.19	63.50	216.66	48.90	166.8	28.50	66.04	225.33	46.23	157.7	28.76
				29	84.2	59.65	203.51	51.30	175.0	28.75	64.14	218.83	49.38	168.5	29.07	66.70	227.58	46.69	159.3	29.33
				31	87.8	60.24	205.53	51.80	176.7	29.31	64.77	221.00	49.87	170.2	29.64	67.36	229.84	47.15	160.9	29.91
46	114.8	15000	8829	24	75.2	51.38	175.30	44.18	150.8	32.41	55.25	188.50	42.54	145.1	32.78	57.45	196.04	40.22	137.2	33.07
				27	80.6	51.97	177.32	44.69	152.5	32.98	55.88	190.66	43.03	146.8	33.35	58.12	198.29	40.68	138.8	33.65
				29	84.2	51.97	177.32	44.69	152.5	33.26	55.88	190.66	43.03	146.8	33.63	58.12	198.29	40.68	138.8	33.93
				31	87.8	52.56	179.33	45.20	154.2	33.54	56.52	192.83	43.52	148.5	33.92	58.78	200.54	41.14	140.4	34.22
52	125.6	15000	8829	24	75.2	43.11	147.09	37.07	126.5	30.44	46.36	158.16	35.69	121.8	30.78	48.21	164.49	33.75	115.1	31.06
				27	80.6	44.29	151.12	38.09	129.9	30.72	47.63	162.50	36.67	125.1	31.07	49.53	169.00	34.67	118.3	31.34
				29	84.2	45.47	155.15	39.11	133.4	31.01	48.90	166.83	37.65	128.5	31.35	50.85	173.50	35.60	121.4	31.63
				31	87.8	47.24	161.20	40.63	138.6	31.29	50.80	173.33	39.12	133.4	31.64	52.83	180.26	36.98	126.2	31.92

Model：GK-H25TH/NaA-M(L)

Outdoor Air DBT		Air Flow Rate		Entering Air DBT		Indoor Air Wet Bulb Temperature°C (°F)														
						17°C(62.6°F)					19°C(66.2°F)					22°C(71.6°F)				
						TC		SCC		PI	TC		SCC		PI	TC		SCC		PI
°C	°F	m³/hr	cfm	°C	°F	kW	Mbh	kW	Mbh	kW	kW	Mbh	kW	Mbh	kW	kW	Mbh	kW	Mbh	kW
27	80.6	16500	9712	24	75.2	83.60	285.24	71.89	245.3	33.07	89.89	306.70	69.22	236.2	33.44	93.49	318.97	65.44	223.3	33.74
				27	80.6	84.43	288.06	72.61	247.7	33.45	90.78	309.74	69.90	238.5	33.82	94.41	322.13	66.09	225.5	34.12
				29	84.2	84.43	288.06	72.61	247.7	33.82	90.78	309.74	69.90	238.5	34.20	94.41	322.13	66.09	225.5	34.51
				31	87.8	85.25	290.88	73.32	250.2	34.20	91.67	312.78	70.59	240.8	34.58	95.34	325.29	66.74	227.7	34.89
35	95	16500	9712	24	75.2	81.94	279.59	70.47	240.4	37.58	88.11	300.63	67.84	231.5	38.00	91.63	312.66	64.14	218.9	38.34
				27	80.6	82.77	282.41	71.18	242.9	37.58	89.00	303.67	68.53	233.8	38.00	92.56	315.81	64.79	221.1	38.34
				29	84.2	83.60	285.24	71.89	245.3	38.33	89.89	306.70	69.22	236.2	38.76	93.49	318.97	65.44	223.3	39.11
				31	87.8	84.43	288.06	72.61	247.7	39.09	90.78	309.74	69.90	238.5	39.52	94.41	322.13	66.09	225.5	39.88
46	114.8	16500	9712	24	75.2	72.01	245.70	61.93	211.3	43.22	77.43	264.19	59.62	203.4	43.70	80.53	274.76	56.37	192.3	44.09
				27	80.6	72.84	248.52	62.64	213.7	43.97	78.32	267.23	60.31	205.8	44.46	81.45	277.92	57.02	194.5	44.86
				29	84.2	72.84	248.52	62.64	213.7	44.35	78.32	267.23	60.31	205.8	44.84	81.45	277.92	57.02	194.5	45.24
				31	87.8	73.67	251.35	63.35	216.2	44.72	79.21	270.26	60.99	208.1	45.22	82.38	281.08	57.66	196.7	45.63
52	125.6	16500	9712	24	75.2	60.42	206.16	51.96	177.3	40.59	64.97	221.68	50.03	170.7	41.04	67.57	230.54	47.30	161.4	41.41
				27	80.6	62.08	211.81	53.39	182.2	40.96	66.75	227.75	51.40	175.4	41.42	69.42	236.86	48.59	165.8	41.79
				29	84.2	63.73	217.46	54.81	187.0	41.34	68.53	233.82	52.77	180.0	41.80	71.27	243.18	49.89	170.2	42.18
				31	87.8	66.22	225.93	56.95	194.3	41.72	71.20	242.93	54.82	187.1	42.18	74.05	252.65	51.83	176.9	42.56

Model：GK-C30TH/NaA-M(L)

Outdoor Air DBT		Air Flow Rate		Entering Air DBT		Indoor Air Wet Bulb Temperature°C (°F)														
						17°C(62.6°F)					19°C(66.2°F)					22°C(71.6°F)				
						TC		SCC		PI	TC		SCC		PI	TC		SCC		PI
°C	°F	m³/hr	cfm	°C	°F	kW	Mbh	kW	Mbh	kW	kW	Mbh	kW	Mbh	kW	kW	Mbh	kW	Mbh	kW
27	80.6	18500	10889	24	75.2	98.63	336.51	84.82	289.4	29.59	106.0	361.84	81.66	278.6	29.92	110.2	376.32	77.20	263.4	30.19
				27	80.6	99.60	339.85	85.66	292.2	29.93	107.1	365.43	82.47	281.3	30.26	111.3	380.04	77.97	266.0	30.53
				29	84.2	99.60	339.85	85.66	292.2	30.26	107.1	365.43	82.47	281.3	30.60	111.3	380.04	77.97	266.0	30.88
				31	87.8	100.5	343.18	86.50	295.1	30.60	108.1	369.01	83.28	284.1	30.94	112.4	383.77	78.73	268.6	31.22
35	95	18500	10889	24	75.2	96.67	329.85	83.14	283.6	33.63	103.9	354.68	80.04	273.1	34.00	108.1	368.86	75.68	258.2	34.31
				27	80.6	97.65	333.18	83.98	286.5	33.63	105.0	358.26	80.85	275.8	34.00	109.2	372.59	76.44	260.8	34.31
				29	84.2	98.63	336.51	84.82	289.4	34.30	106.0	361.84	81.66	278.6	34.68	110.2	376.32	77.20	263.4	34.99
				31	87.8	99.60	339.85	85.66	292.2	34.97	107.1	365.43	82.47	281.3	35.36	111.3	380.04	77.97	266.0	35.68
46	114.8	18500	10889	24	75.2	84.96	289.87	73.06	249.2	38.67	91.35	311.69	70.34	240.0	39.10	95.00	324.15	66.50	226.9	39.45
				27	80.6	85.93	293.20	73.90	252.1	39.34	92.40	315.27	71.15	242.7	39.78	96.10	327.88	67.27	229.5	40.14
				29	84.2	85.93	293.20	73.90	252.1	39.68	92.40	315.27	71.15	242.7	40.12	96.10	327.88	67.27	229.5	40.48
				31	87.8	86.91	296.53	74.74	255.0	40.01	93.45	318.85	71.96	245.5	40.46	97.19	331.61	68.03	232.1	40.82
52	125.6	18500	10889	24	75.2	71.28	243.22	61.30	209.1	36.32	76.65	261.53	59.02	201.3	36.72	79.72	271.99	55.80	190.3	37.05
				27	80.6	73.24	249.89	62.98	214.9	36.65	78.75	268.70	60.64	206.9	37.06	81.90	279.44	57.33	195.6	37.39
				29	84.2	75.19	256.55	64.66	220.6	36.99	80.85	275.86	62.25	212.4	37.40	84.08	286.89	58.86	200.8	37.74
				31	87.8	78.12	266.55	67.18	229.2	37.32	84.00	286.61	64.68	220.6	37.74	87.36	298.07	61.15	208.6	38.08

Notices:

- DBT: Dry Bulb Temperature.
- TC：Total Cooling Capacity
- SCC：Sensible Cooling Capacity
- PI：Power Input

6 AIR VOLUME STATIC PRESSURE CURVE

Model：GK-H5.5TH/NaA-X(L),GK-H6.2TH/NaA-X(L)

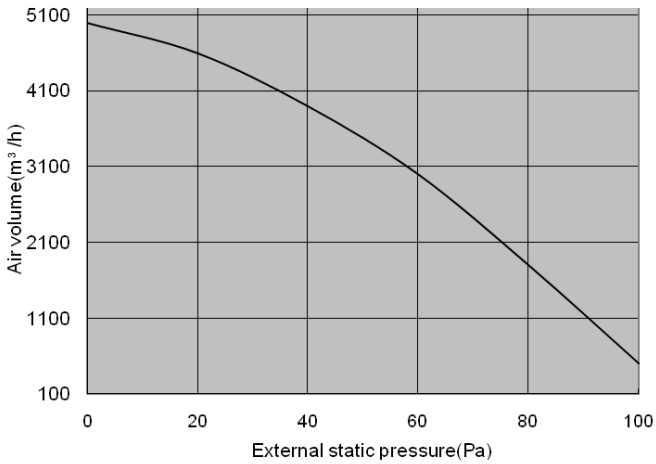

Model：GK-H7.5TH/NaA-X(L)

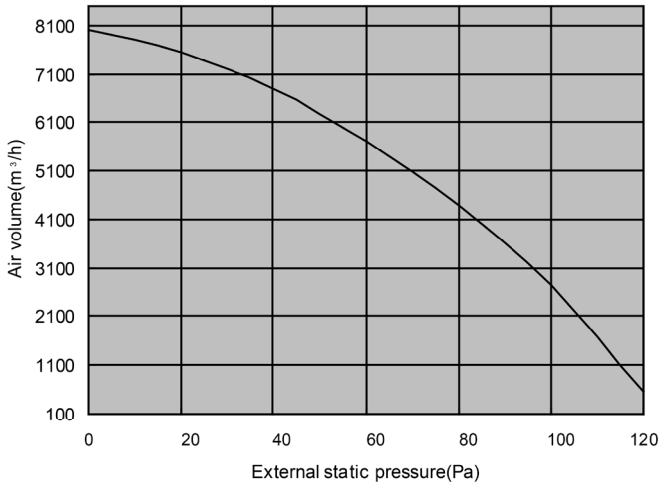

Model：GK-H10TH/NaA-X(L)

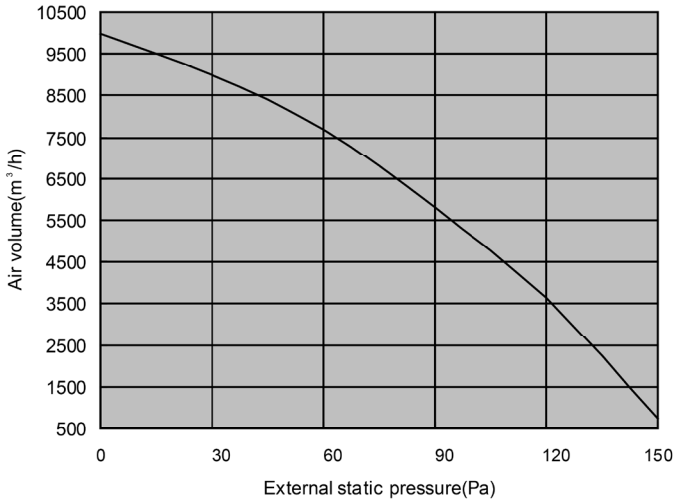

Model：GK-H15TH/NaA-M(L)

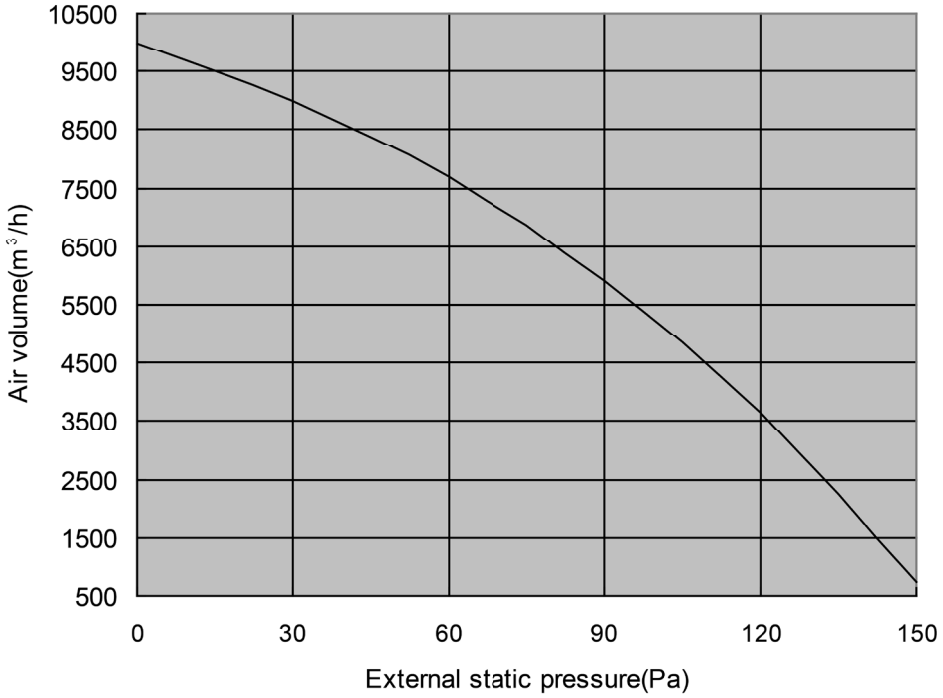

Model：GK-H20TH/NaA-M(L)

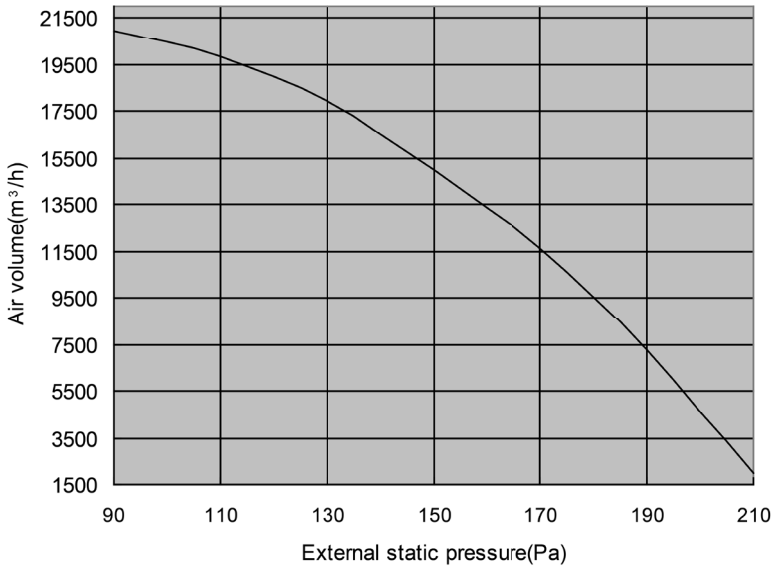

Model：GK-H25TH/NaA-M(L)

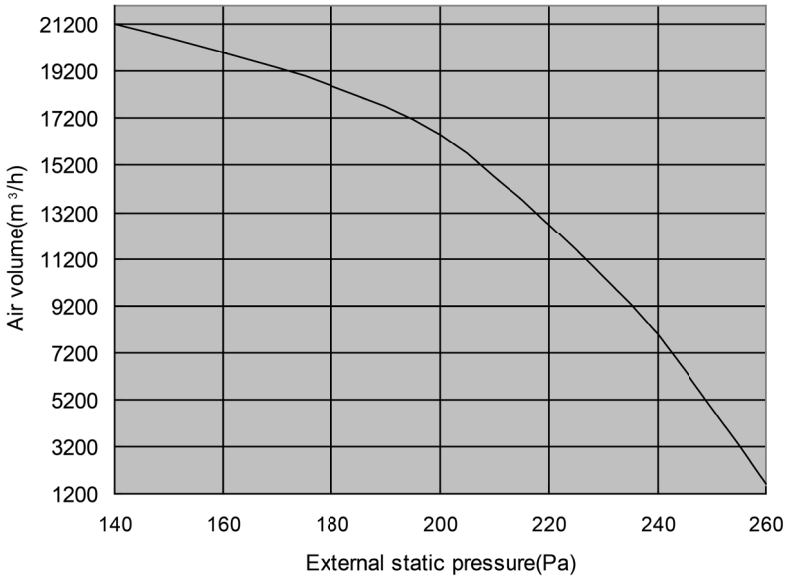

Model：GK-C30TH/NaA-M(L)

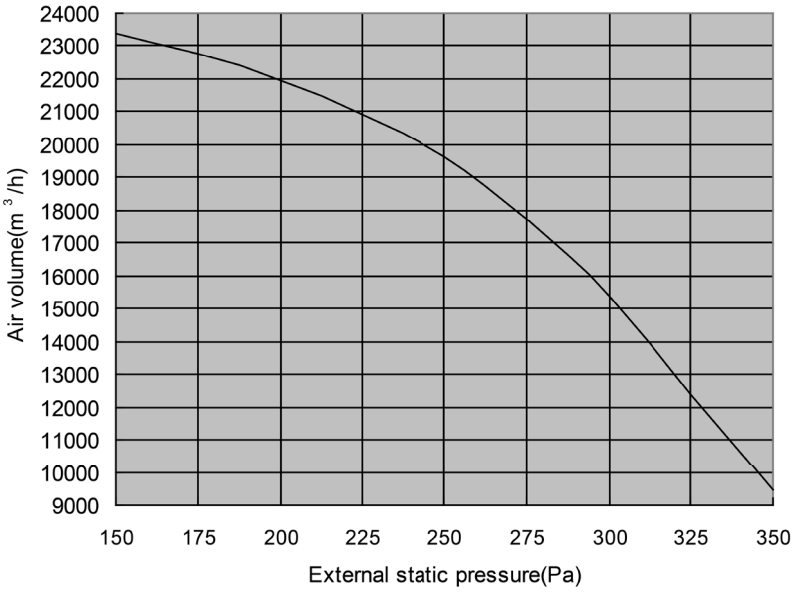

7 CLEARANCE DATA

7.1 Installation Positions

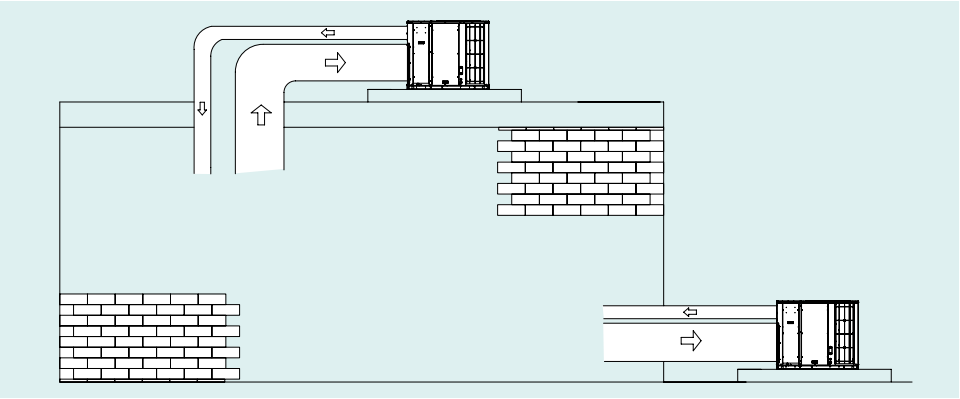

7.2 Installation Clearances

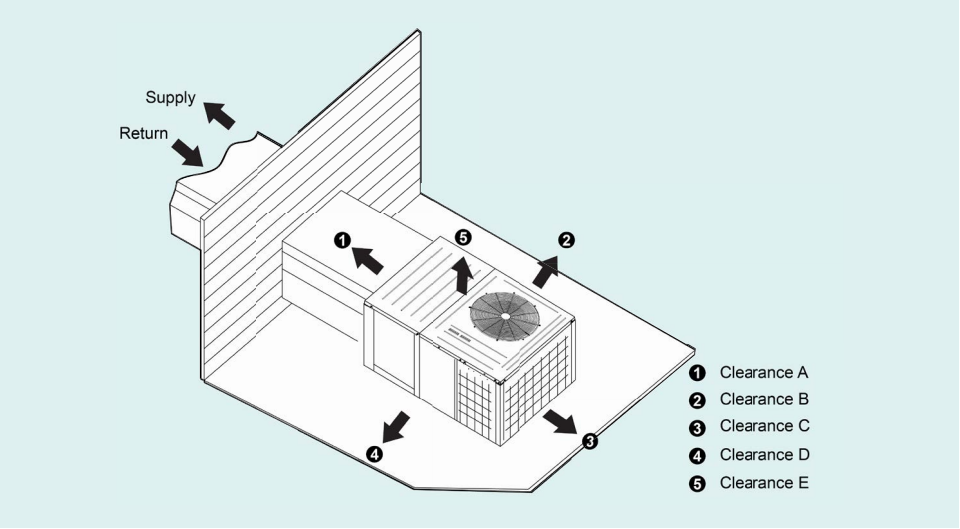

GK-H5.5TH/NaA-X(L),GK-H6.2TH/NaA-X(L)

Installation Clearances		
Dimension(Minimum)	mm	inch
A	600	24
B	1100	43
C	860	34
D	1100	43
E	1100	43

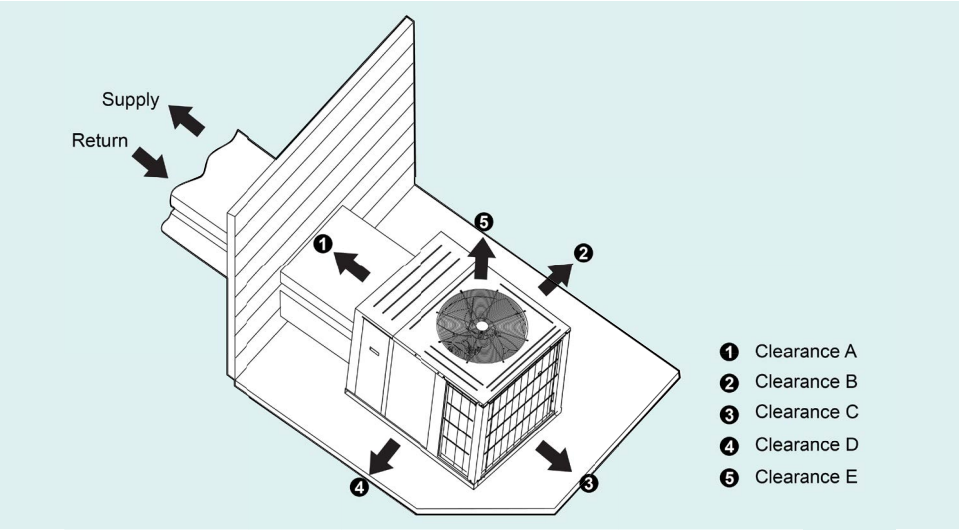

GK-H7.5TH/NaA-X(L),GK-H10TH/NaA-X(L)

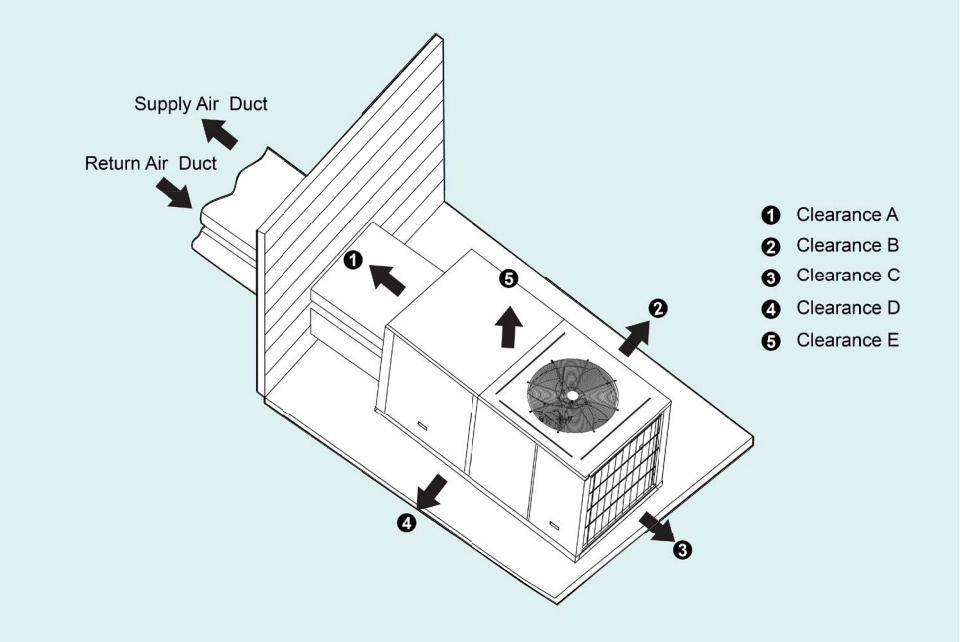

GK-H15TH/NaA-M(L)

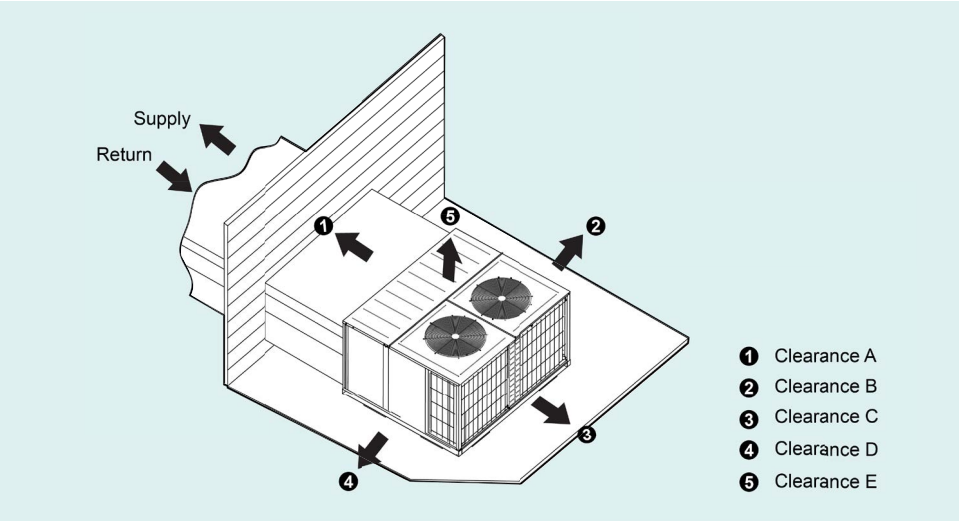

GK-H20TH/NaA-M(L)

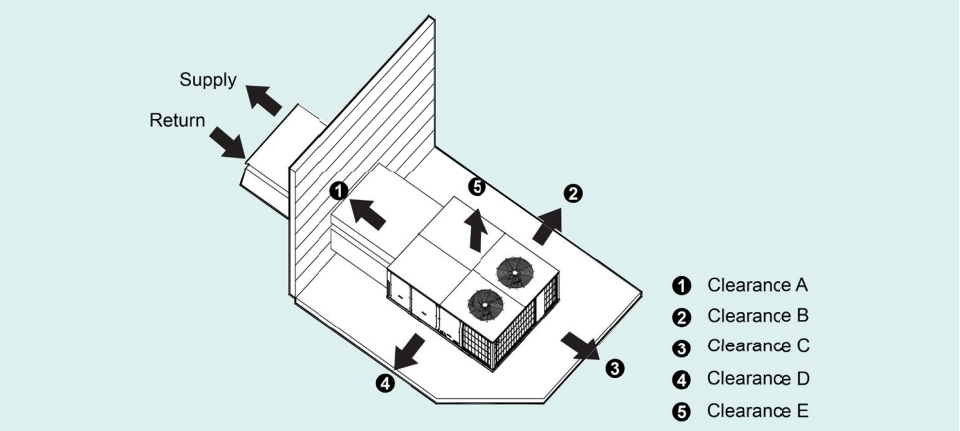

GK-H25TH/NaA-M(L)

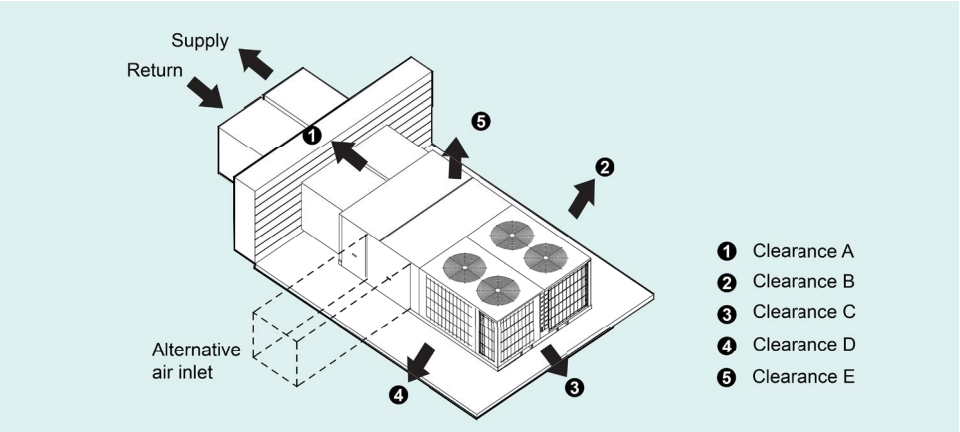

GK-C30TH/NaA-M(L)

Installation clearances		
Dimension (minimum)	mm	inch
A	1000	39
B	1500	59
C	1100	43
D	1100	43
E	1830	72

8 DIMENSIONAL DATA

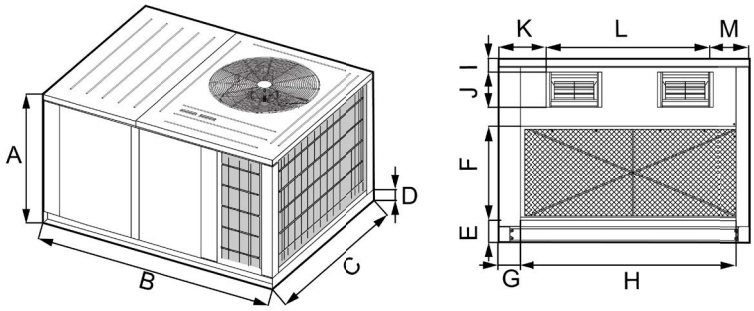

GK-H5.5TH/NaA-X(L),GK-H6.2TH/NaA-X(L)

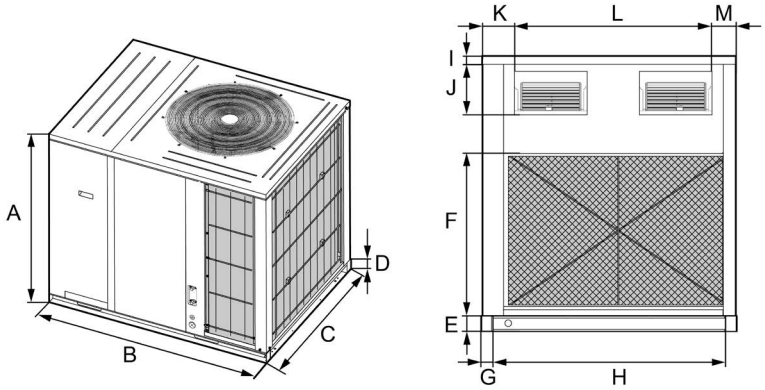

GK-H7.5TH/NaA-X(L),GK-H10TH/NaA-X(L)

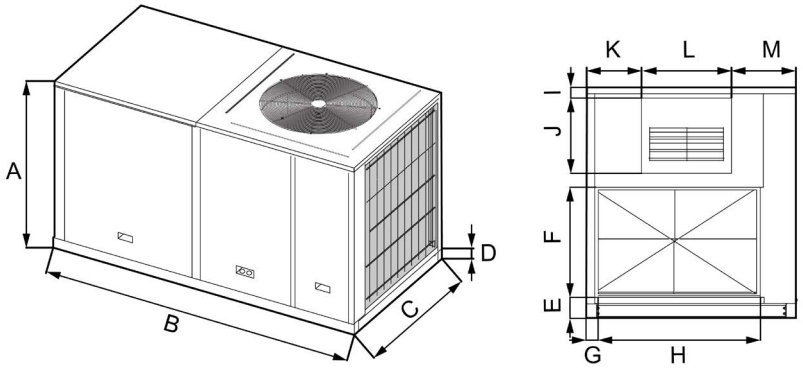

GK-H15TH/NaA-M(L)

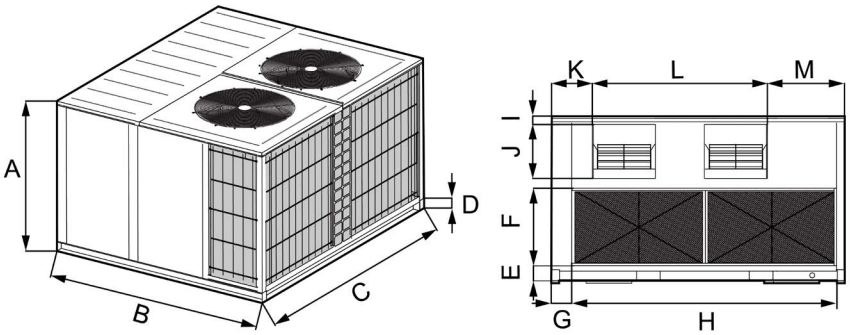

GK-H20TH/NaA-M(L)

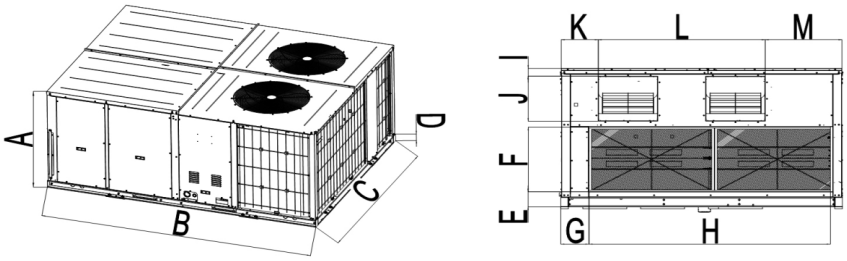

GK-H25TH/NaA-M(L)

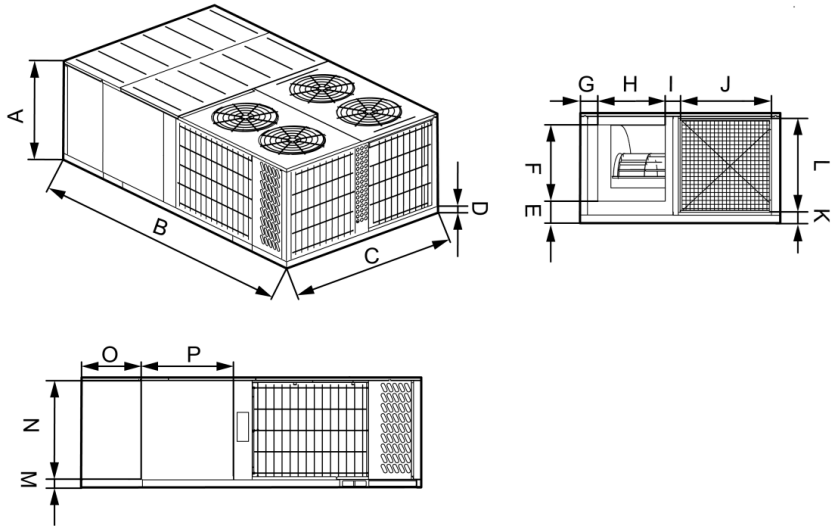

GK-C30TH/NaA-M(L)

Dimension(mm)	A	B	C	D	E	F	G	H	I	J	K	L	M
GK-H5.5TH/NaA-X(L)	815	1450	1120	70	98	417	94	916	65	190	144	866	105
GK-H6.2TH/NaA-X(L)	815	1450	1120	70	98	417	94	916	65	190	144	866	105
GK-H7.5TH/NaA-X(L)	1215	1450	1120	70	98	686	94	916	70	190	144	866	105
GK-H10TH/NaA-X(L)	1215	1450	1120	70	98	686	94	916	70	190	144	866	105
GK-H15TH/NaA-M(L)	1245	2260	1140	80	111	595	50	914	58	406	298	487	349
GK-H20TH/NaA-M(L)	1250	1880	2240	85	115	590	158	2021	45	412	311	1336	588
GK-H25TH/NaA-M(L)	1270	2880	2240	90	138	585	224	1920	71	407	294	1329	610

Dimension(mm)	A	B	C	D	E	F	G	H	I	J	K	L	M	N	O	P
GK-C30TH/NaA-M(L)	1250	3800	2240	90	252	868	192	753	169	1015	147	1024	147	1024	664	1035

Note: Above diagrams may be different from actual model.

9 CONTROLLER

Wired Controller (Standard)

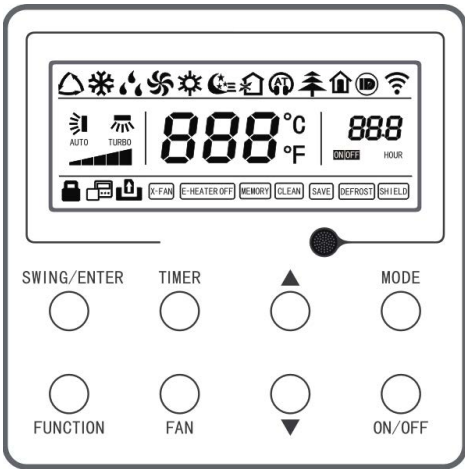

Central Controller

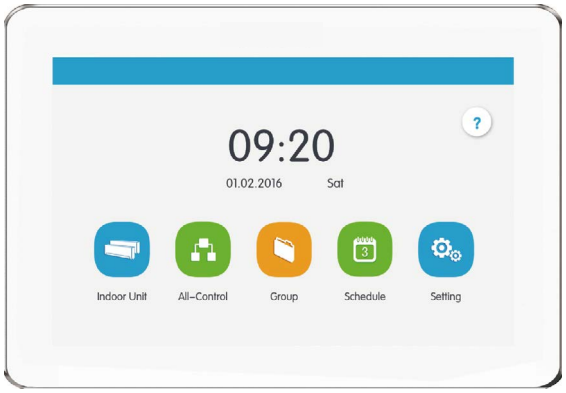

Modbus Gateway

Dry contact gateway

Wireless Remote Controller

10 WIRING DIAGRAM

Model：GK-H5.5TH/NaA-X(L),GK-H6.2TH/NaA-X(L), GK-H7.5TH/NaA-X(L),GK-H10TH/NaA-X(L)

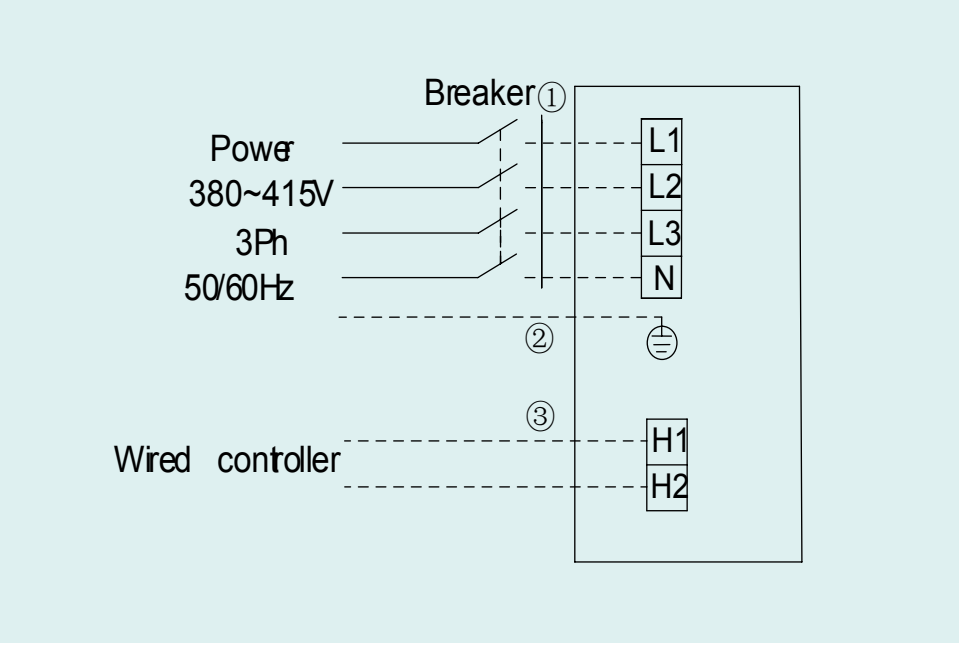

Model：GK-H15TH/NaA-M(L),GK-H20TH/NaA-M(L), GK-H25TH/NaA-M(L),GK-C30TH/NaA-M(L)

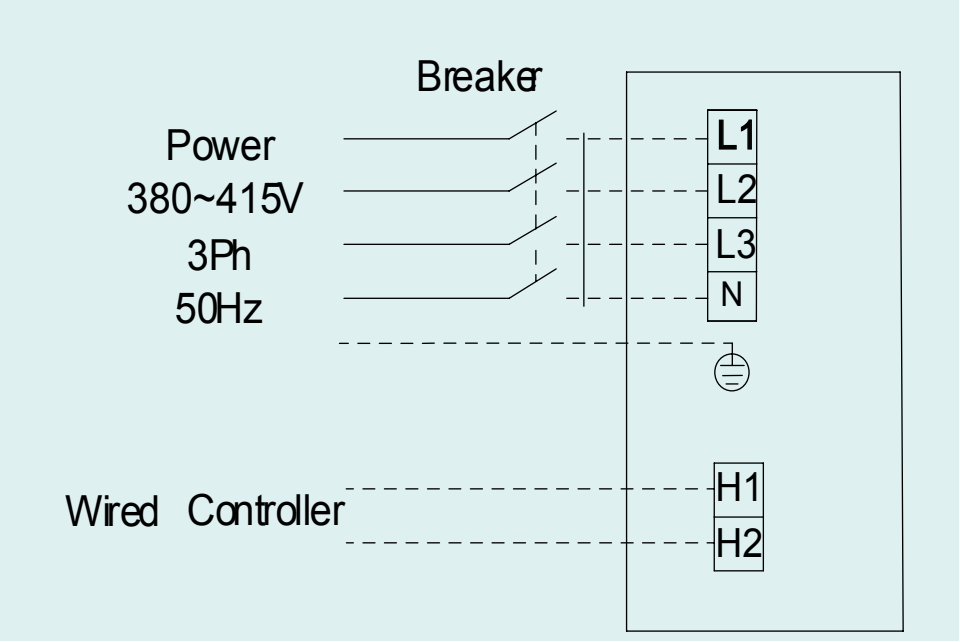

① Power cord
② Earth wire
③ Communication Cord

10.1 Specification of Power Supply Wire and Circuit Breaker

Model name	Power supply	Capability of circuit breaker (A)	Min. sectional area of earth wire(mm²)	Min. sectional area of power cord(mm²)
GK-H5.5TH/NaA-X(L)	380-415V 3N~,50/60Hz	25	2.5	2.5
GK-H6.2TH/NaA-X(L)	380-415V 3N~,50/60Hz	25	2.5	2.5
GK-H7.5TH/NaA-X(L)	380-415V 3N~,50/60Hz	32	4.0	4.0
GK-H10TH/NaA-X(L)	380-415V 3N~,50/60Hz	32	4.0	4.0
GK-H15TH/NaA-M(L)	380-415V 3N~,50Hz	63	10.0	10.0
GK-H20TH/NaA-M(L)	380-415V 3N~,50Hz	63	10.0	10.0
GK-H25TH/NaA-M(L)	380-415V 3N~,50Hz	80	16.0	25.0
GK-C30TH/NaA-M(L)	380-415V 3N~,50Hz	80	16.0	25.0

Notice:

- An all-pole disconnection switch having a contact separation of at least 3mm in all poles should be connected in fixed wiring.
- The circuit breaker and power cord specification in above sheet is based on max power (max current) of the unit.
- The power cord specification in above sheet is based on ambient temperature of 40°C.
- If the supply cord is damaged, it must be replaced by the manufacturer or its service agent or a similarly qualified person in order to avoid a hazard.
- The circuit breaker specification in above sheet is based on ambient temperature of 40°C. If the working condition is different, please adjust it according to the specification sheet of circuit breaker.

11 ACCESSORIES

Part Name	Model	Product Code	Model
			GK-H5.5TH/NaA-X(L),GK-H6.2TH/NaA-X(L),GK-H7.5TH/NaA-X(L), GK-H10TH/NaA-X(L),GK-H15TH/NaA-M(L),GK-H20TH/NaA-M(L), GK-H25TH/NaA-M(L),GK-C30TH/NaA-M(L)
Wired Controller	XK117	MC20700730	●
Central controller with Weekly Timer	CE52-24/F(C)	MC207052	○
Electric heating	GKRd36/A-X	EN02000070	○
Dry contact gateway	ME30-42/E1	NC20000020	○
Wireless Remote Controller	YB1FA	/	○
Modbus Gateway	XK117	/	○

Note:

- "●"means standard, "○"means optional, Electric heating is only suitable for 30Ton.
- Gree reserves the right to modify the specifications without prior notice. Please confirm the final specifications with sales representative.

Note:

Gree is committed to continuously improving its products to ensure the highest quality and reliability standards, and to meet local regulations and market requirements.

All features and specifications are subject to change without prior notice.

All images provided in this catalogue are used for illustration purposes only.

GREE ELECTRIC APPLIANCES, INC. OF ZHUHAI 519070

Add: West Jinji Rd,Qianshan Zhuhai,Guangdong,China
Tel: (+86-756)8522218
Fax: (+86-756)8669426
E-mail: gree@cn.gree.com www.gree.com
Code： SJ00553239