Owner's Manual

Original Instructions

BACnet Gateway

Models:
ME30-44/D1(B)

Thank you for choosing commercial air conditioners. Please read this Owner' s Manual carefully before operation and retain it for future reference.

If you have lost the Owner's Manual,please contact the local agent or visit www.gree.com or send an email to global@gree.com.cn for the electronic version.

GREE ELECTRIC APPLIANCES, INC. OF ZHUHAI

User Notice

Dear customer：

Please read this manual carefully prior to installation and operation and strictly observe all installation and operation instructions covered in the manual.

Special attentions shall be paid to the following marks：

⚠ WARNING!	This mark indicates operation, which if improperly performed, might lead to the death or serious injury of the users.
❗ CAUTION!	This mark indicates operation, which if improperly performed, might possibly result in damage to the device.

⚠ WARNING!
(1) Installation shall be performed by the qualified personnel; otherwise it would result in a fire hazard or electric shock.
(2) Do not place the plug of the power supply into the socket before it is dried and cleaned.
(3) Cut off the power supply before touching the electric element.
(4) Do not touch this device with wet hands; otherwise it would result in electric shock.
(5) Do use the power cable specified in this manual; otherwise it would result in a fire hazard.
(6) When the power cable is reversely connected or the power supply is beyond the rated range, it would result in a fire hazard or even damages to this device.
(7) For PLUGGABLE EQUIPMENT,the socket-outlet shall be installed near the equipment and shall be easily accessible.
(8) Do install this device inside the electric control cabinet which is located indoor and then is locked.
(9) Do install this device where it will not be subject to the electromagnetic interference or heavy dust.

CAUTION!
(1) Be sure the specified adaptor is used; otherwise this device would work improperly or even be damaged.
(2) Be sure this device is setup in place; otherwise it would result in communication fault.
(3) Be sure the communication line is connected to the correct interface; otherwise it would result in communication fault.
(4) After connection, lines should be protected with insulating tape to avoid oxidation and short circuits.
(5) Risk of explosion if battery is replaced by an incorrect type,dispose of used batteries according to the instructions.
(6) Normal working conditions for BACnet gateway： ① Temperature : 0~55℃; ② Humidity: less than 85%,except for the condensation of dew; ③ Location: indoor (it is highly recommended to install this product in the electric control cabinet), not subject to direct sunlight, rain and snow etc.
(7) Graphics in the instruction manual are for reference only.
(8) Before energizing BACnet gateway, the unit shall be in energizing status, and normal communication between units.
(9) For the first time energizing BACnet gateway, enter the gateway configuration page settings, restart the gateway after setting up, and operation gateway after wait for 10 minutes(Generally, it is related to the number of units. The more units, the longer the time).

Contents

1 Function and Parameter

1.1 Functional Overview

Gree BACnet gateway ME30-44/D1(B) is intended to realize the data exchange between the air conditioning unit and BMS system, and providing standard BACnet/IP building interface and 10 I/Os (five inputs are DI1, DI2, DI3, DI4, DI5 and five outputs are DO1, DO2, DO3, DO4, DO5). DI1 is the fire alarm interface. The status of other I/Os are mapped to the specific objects of the BACnet/IP bus and are defined by the user. Applicable models for this gateway are listed in Attachment B.

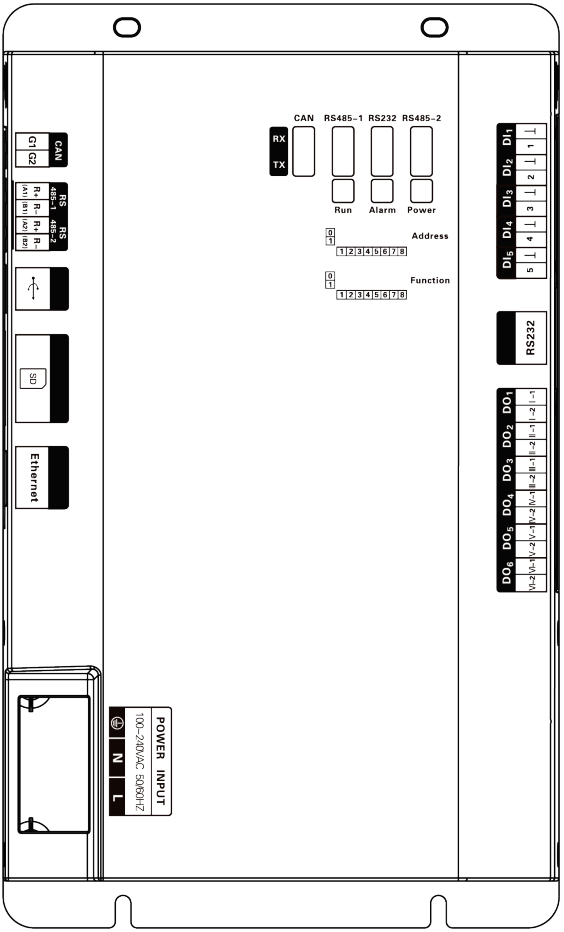

1.2 Parameter Specifications

1.2.1 BACnet gateway TCP/IP Parameter (Default)

IP Address：192.168.1.150

Subnet Mask：255.255.255.0

Default gateway：192.168.1.1

CAUTION!

Please reenergize the gateway to make the modified TCP/IP data effective.

1.2.2 BACnet Gateway Building Interface Parameter

Parameters of all kinds of supportive air conditioners shall refer to Attachment A: Parameter of Air Conditioner.

2 Parts and Assembly

This kit includes the following parts. Please check before installation.

BACnet gateway	1 set
Instruction manual	1 set

3 Introduction for BACnet Gateway

3.1 Interface

3.1.1 Diagram of Interface Function

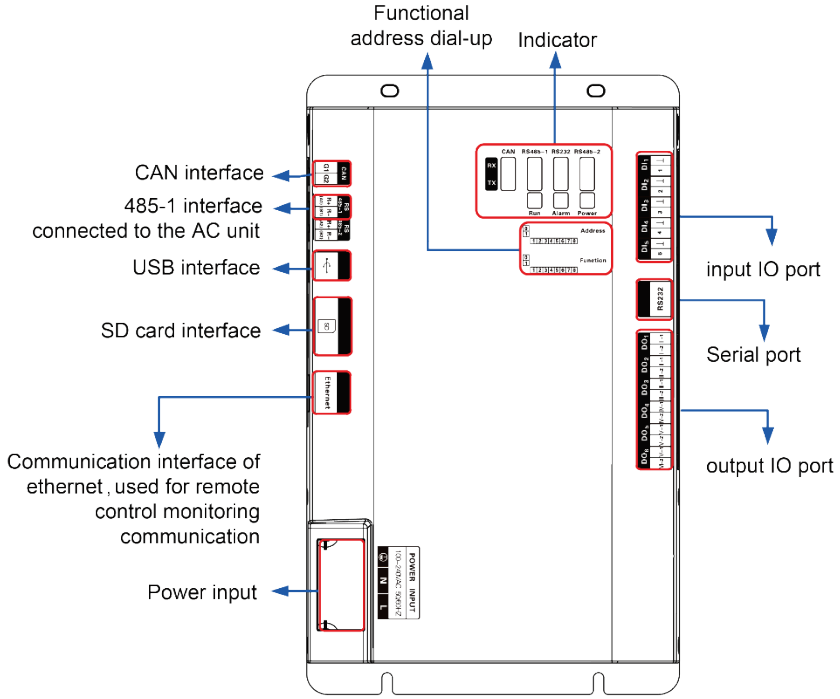

3.1.2 Power

The input power is 100VAC-240VAC and 50/60Hz.

⚠ **WARNING!**The ground protection of power input port must be connected, otherwise it might be dangerous; besides, when the gateway is energized, don't touch the power input.

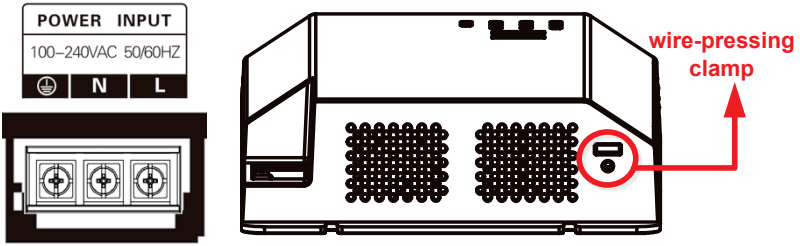

Notice ! The power cord should pass through the wire-pressing clamp for fixing.The power cord with the diameter of 3×1.0mm² is suggested to be used.As shown in the figure.

3.1.3 Communication Interface

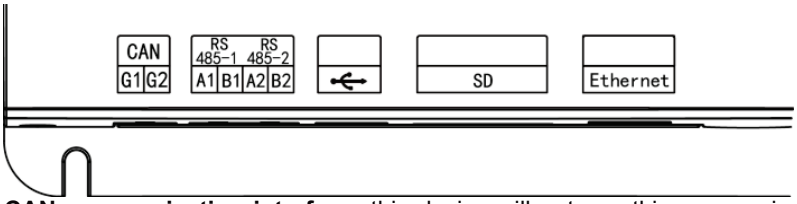

CAN communication interface: this device will not use this communication interface temporarily.

RS485-1 communication interface: connect it to the AC unit through the 2-core communication line to realize the communication between BACnet gateway and the AC which adopts 485 bus.

RS485-2 communication interface: this device will not use this communication interface temporarily.

USB and SD card interface: this device will not use this interface temporarily.

Ethernet interface: realize communication through network cable and BMS.

3.1.4 Input/Output of DI/DO Digital Quantity

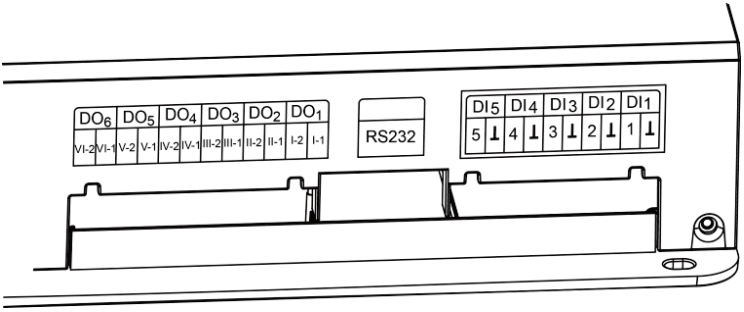

So far, this gateway supports 5 DIs (digital input) and 5 Dos (digital output), DO6 is reserved.

(1) DI1...DI5

Digital input 0/1 digital signal (binary system), apply to active input.

DI 1: In 485 network, fire alarm signal, connect “1” to the power of 12V, input fire alarm signal “1” in DI 1 port, then BACnet gateway will give out control, all units stop operation immediately; disconnect “1” or connect to “0”, input signal “0” in DI 1 port,

resume operation of IDUs manually.

DI 2...DI 5: Defined by the user.

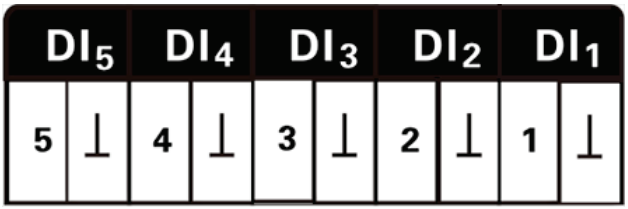

(2) DO1...DO5

Digital output Relay output, turn on the contactor oftentimes.

Maximum admissible electric quantity: 250VAC, 3A; 30VDC, 3A

Usage example: Input “1” in DO 5 of BACnet protocol, the two contactors of DO5 relay will close; input “0” in DO 5 of BACnet, the two contactors of DO 5 will cut off.

3.2 LED Display

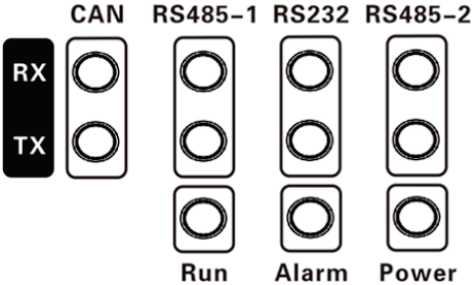

The above LED indicator is mainly consist of two parts: status indicator (run, alarm, power) and communication indicator (CAN, RS485, RS2332). The following table is the working status of each indicator.

CAN	RX	This device does not use this LED indicator.
CAN	TX	This device does not use this LED indicator.
RS485-1	RX	When receiving the data of equipment (eg. AC unit) which connects to BACnet gateway, it blinks.
RS485-1	TX	When transmitting data to the equipment (eg. AC unit) which connects to BACnet gateway, it blinks.
RS232	RX	This device does not use this LED indicator.
RS232	TX	This device does not use this LED indicator.
RS485-2	RX	This device does not use this LED indicator.
RS485-2	TX	This device does not use this LED indicator.
Power		When power supply of BACnet gateway is normal, it is on.
Run		When BACnet gateway is running normally, it blinks.
Alarm		This device does not use this LED indicator.

3.3 Dial-Up

Notice! Before using this device, please conduct dial-up setting first, otherwise the unit will not function normally!

Gateway dial-up setting area is consisting of address dial-up machine and function dial-up machine.

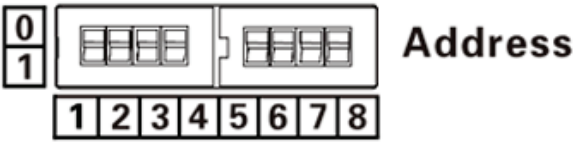

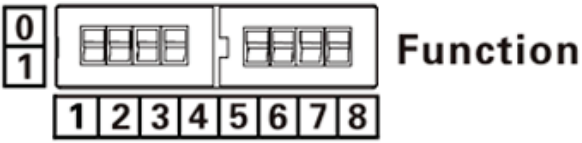

3.3.1 Diagram of dial-up machine

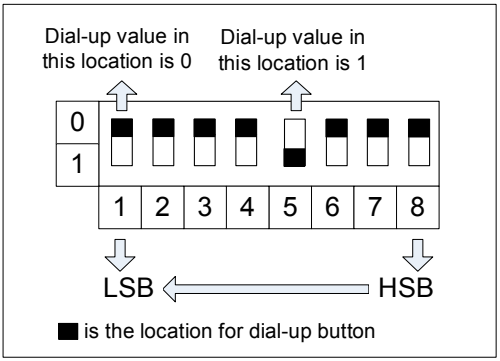

3.3.2 8 Address dial-up buttons--Gateway reset configuration

If information such as BACnet gateway IP address configured on the webpage, subnet mask, default gateway, gateway name, gateway ID and model configuration are mistaken, and the webpage cannot be visited, dial up the 8 address dial-up buttons to “1”, after all indicating lights (except power indicating light) are blinking, reset the dial-up button and restart the gateway, then the default information in gateway manufacture setting can be restored.

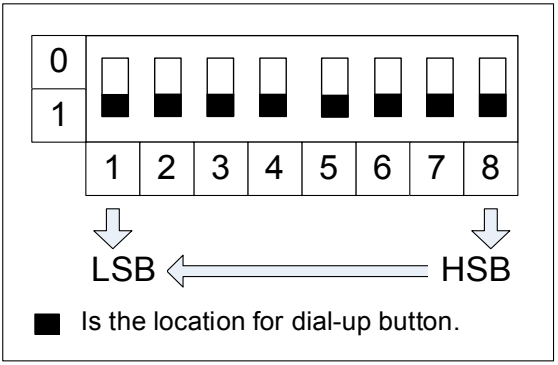

3.3.3 Function DIP Switch-RS485 Bus Matched Resistance Setting

Notice! If any fault is found during engineering debugging, please set the unit or gateway under the front and end systems of 485 bus as with matched resistance, otherwise, it cannot communicate normally. Detailed situation depends on the actual project!

485 bus: specific meaning shall refer to the specification Internet topological graph.

The No.7 dial-up button in function dial-up machine shall be used in the setting in the matched resistance of 485 bus in this gateway.

When the gateway is at the top/end of 485 bus, the gateway shall be with the matched resistance, then dial the No.7 function dial-up machine to 0;

When the gateway is not at the top/end of 485 bus, the gateway is not with the matched resistance, then dial it to 1.

Setting of gateway network position and matched resistance:

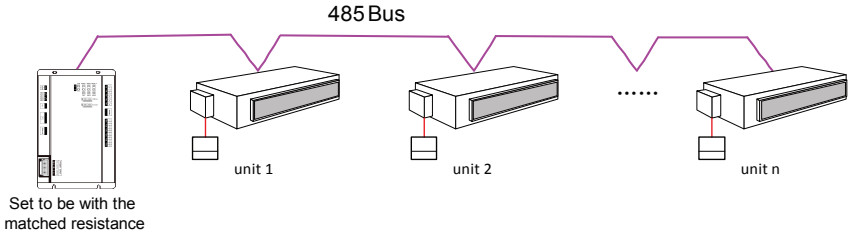

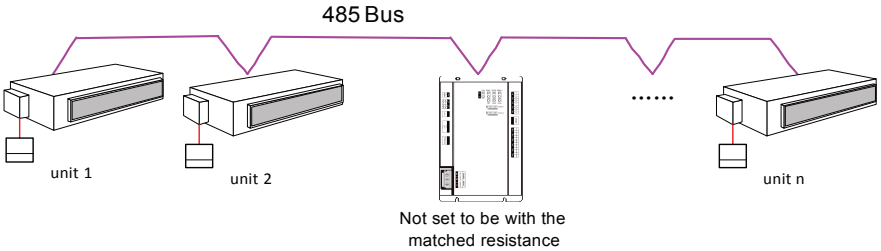

n is the unit quantity (refer to Chapter 4.2).

Dial-up setting graph for the matched resistance：

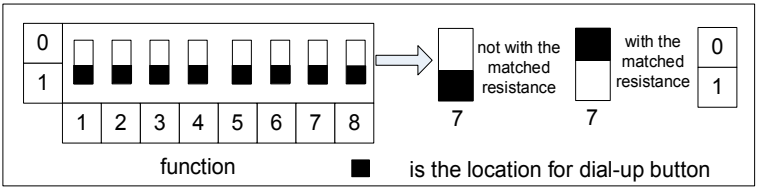

4 Application

Generally, the application occasion for BACnet gateway is building management system.

4.1 Building Management System (BMS)

This gateway adops BACnet standard protocol. It can connect to BAS system or Builidng Management System（BMS，Building Management System). It realizes the monitor of building management system to unit (RS485 Bus) through BACnet gateway.

4.2 Internet Topological Graph

Network topology instruction of 485 bus:

Internet for RS485 bus: the black wire is RS485 bus, which is consisting of BACnet gateway and all IDUs and ODUs of the system. One RS485 Bus internet can be connected to maximum N unit(s).

System: one system is a bus internet, consisting of one gateway and 1-N unit(s) (including the subordinate IDU and ODU).

The admissible unit quantity for BACnet gateway: one BACnet gateway can be connected to a maximum of N unit(s) (including the subordinate IDU and ODU).

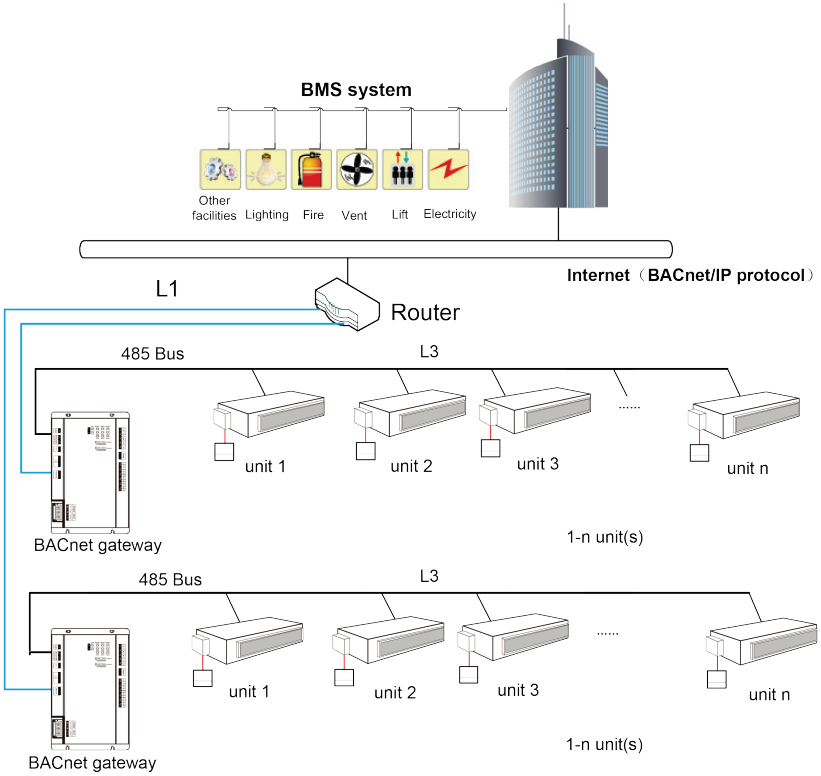

Notice:

1. L1 is the standard network cable and L3 is the twisted pair line.
   1) Residential split type unit can be connected with 255 wired controllers in maximum;
   2) U-Match/Rooftop unit can be connected with 255 indoor units in maximum (new models need transition through Modbus gateway, please refer to Chapter 5.2.3);
   3) Centrifugal chiller can be connected with 8 touch screens in maximum;
   4) Air-cooled screw chiller can be connected with 9 wired controllers in maximum;
   5) Water-cooled screw chiller can be connected with 9 touch screens in maximum;

5 Product Installation

5.1 Product Size and Spatial Size for Electric Control Cabinet Installation

5.1.1 Product Size

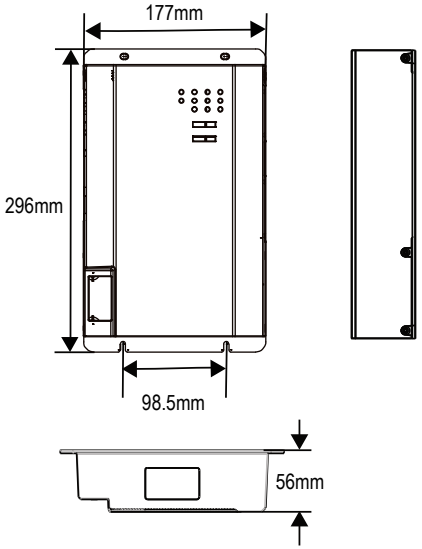

L × W × H：296×177×56（mm）

5.1.2 Spatial Size for Electric Control Cabinet Installation

BACnet gateway shall be installed in electric control cabinet; the front of gateway shall be hung upward and fixed with 4 screws. See the following fig (for reference).

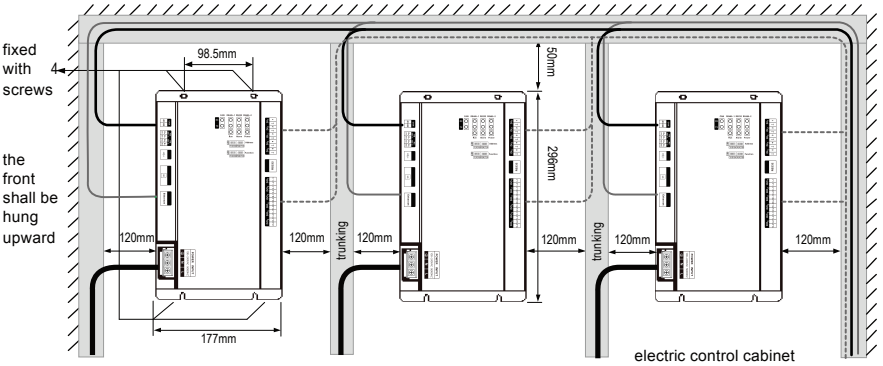

⚠**Warning!** Power cord and communication line of BACnet gateway must conduct routing separately(the distance shall be over 15cm); otherwise, it might lead to BACnet gateway communication malfunction!

The thin dotted line is communication line and the thick dotted line is the heavy current wire, the routing shown is for reference only.

5.2 Communication Connection

BACnet gateway communication system includes：

(1) The communication between BACnet gateway and BMS;

(2) The communication between BACnet gateway and AC units.

5.2.1 Material Selection for Communication Line

(1) Model selection of BACnet gateway and BMS communication line shall use standard Ethernet communication line, the length of network cable between gateway and router (computer, switchboard, etc.) shall not exceed 80m;

(2) Communication line model selection for BACnet gateway and AC unit：

Wire type	L(m)Communication line between gateway and AC units	Wire diameter (mm^2)	Wire standard	Remark
Shielding light/general PVC sleeve twisted pair copper core soft wire (RVVSP)	L≤500	≥2×0.75	IEC6022 7-5:2007	Total communication length shall not exceed 500m

5.2.2 Communication Connection Method

(1) Communication connection between BACnet gateway and BMS;

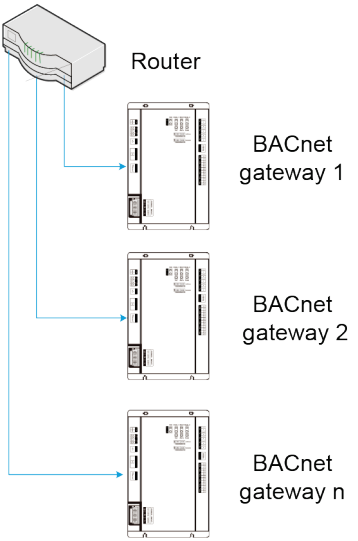

(2) Communication connection between BACnet gateway and AC units.

Notice! All communication connection lines under BACnet gateway must be in series connection, star connection shall not be adopted.

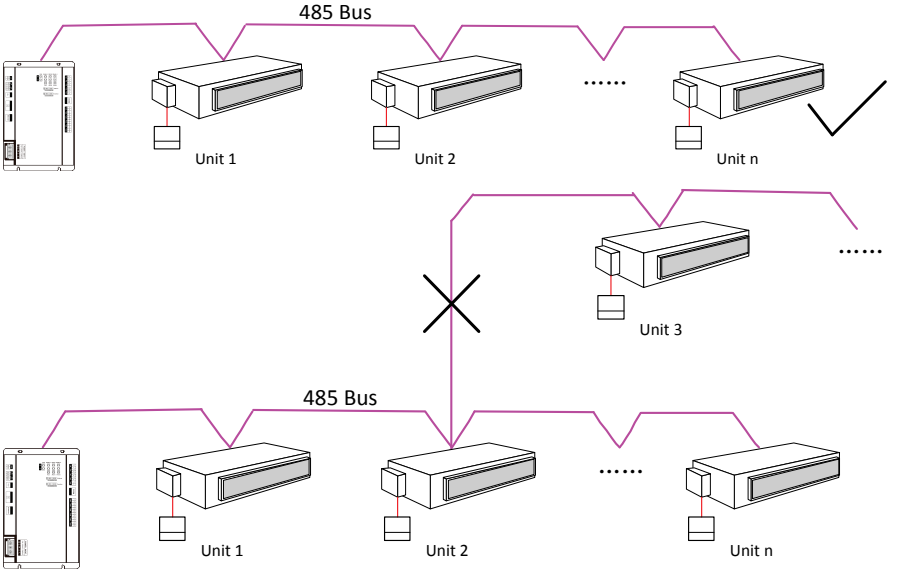

5.2.3 Communication Connection Configuration

(1) Communication line connection between BACnet gateway and PC:

Connection diagram between BACnet gateway and PC user side:

1) Adopt cross connection (or parallel) network cable, BACnet gateway shall directly connect to PC.

10BASE-T or 100BASE-TX cross network cable

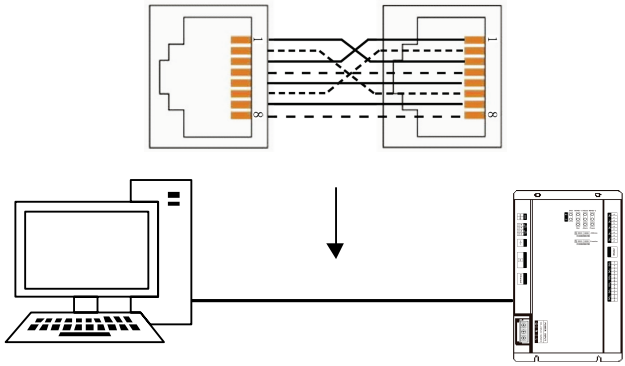

2) Adopt parallel(or cross)network cable, BACnet gateway shall go through router to connect to PC.

10BASE-T or 100BASE-TX parallel network cable

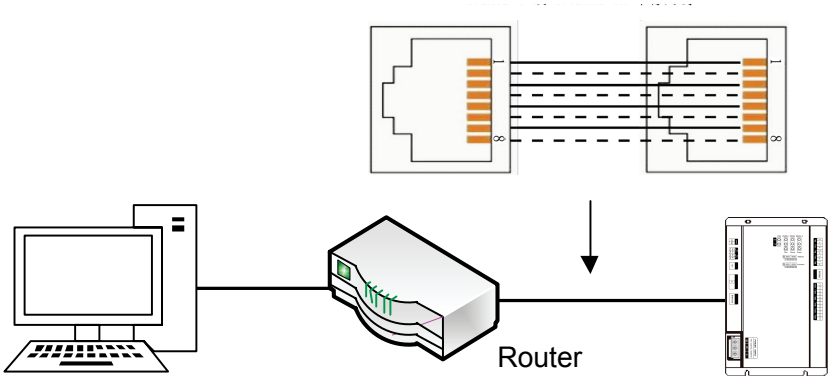

(2) Communication line connection between BACnet gateway and AC units:

Model for residential split type:

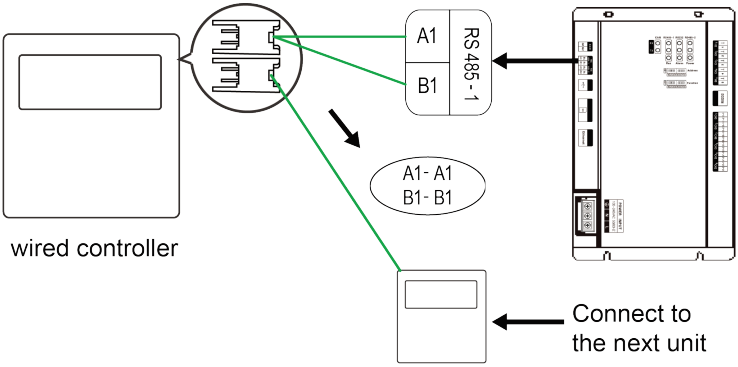

Models of U-Match/Rooftop unit (old models, please refer to Annex B):

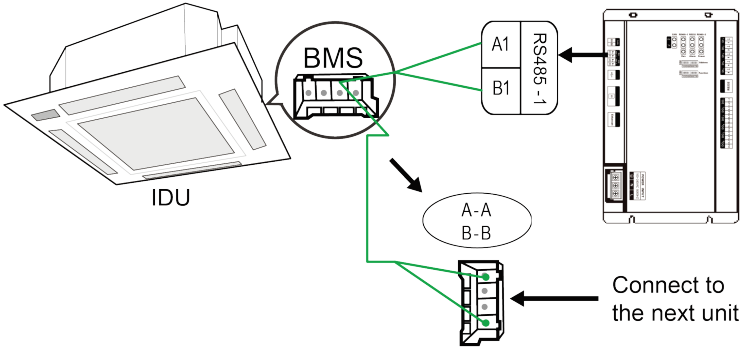

Models of U-Match/Rooftop unit (new models, please refer to Annex B):

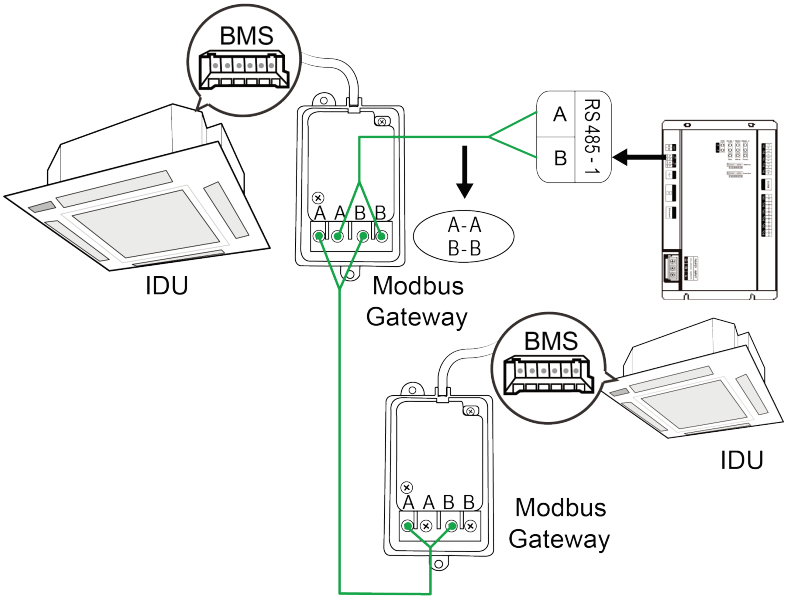

Model for Centrifugal chiller and Water-cooled Screw Chiller:

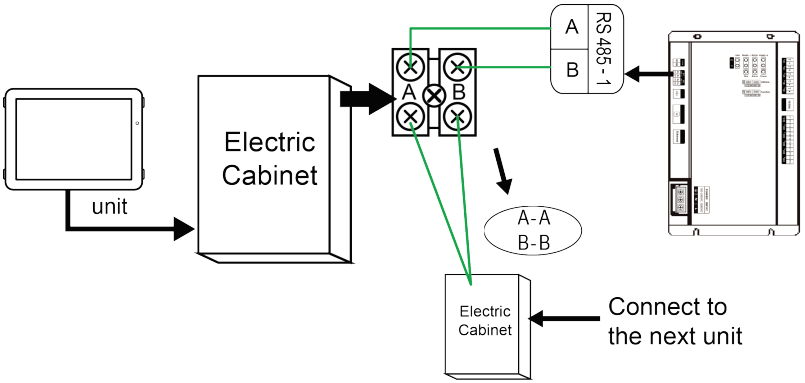

Model for Air-cooled Screw Chiller:

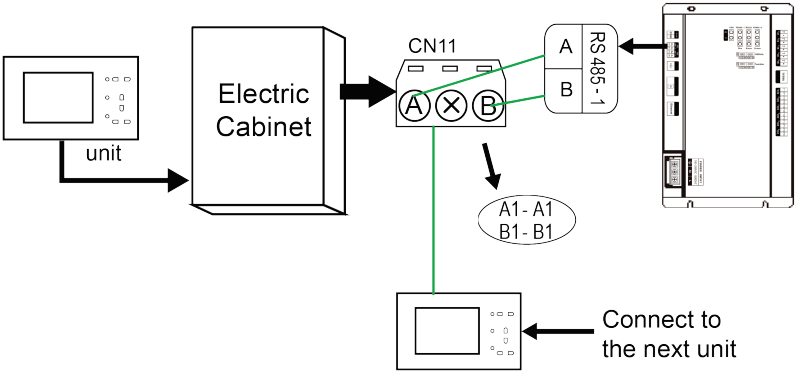

(3) BACnet gateway configuration：

One BACnet gateway connects units at the same time. The gateway parameter shall be configured after its installation, however, before this please set the IP address of the PC the same with that of the BACnet gateway, see Attachment A; then open the browser (IE10 or higher, red fox or Google), input the default IP address into the address field: http://192.168.1.150, the default user name and password are both “config”; refer to the following fig.

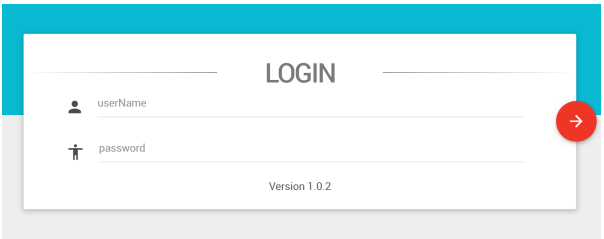

After input, press the button to go to the setting page.

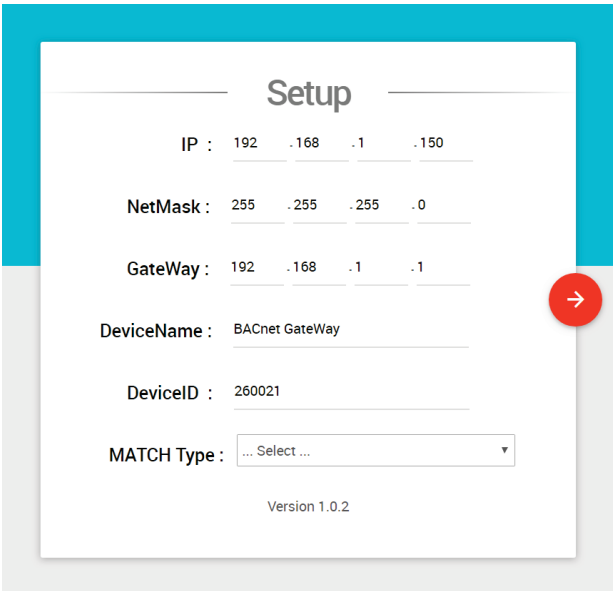

The configurable parameters include gateway IP, subnet mask, defaulted gateway, gateway name, gateway ID and model configuration. The user can conduct configuration at his will, after that, click “arrow” button to restart the gateway.

Notice! This model configuration of BACnet Gateway is mutually exclusive.

6 BACnet Protocol

6.1 Structure of BACnet Protocol

The structure of BACnet standard protocol is specific to building self-control system characteristics, a simplified 4-layer structure from OSI 7-layer structure; this 4-layer is corresponding to the application layer, network layer, data link and physical layer in OSI model. BACnet standard protocol defines its application layer and network layer, and provides the following 5 solutions to its data link and physical layers.

<table>
<tr><th colspan="5">BACnet Layers</th><th>Equivalent OSI Layers</th></tr>
<tr><td colspan="5">BACnet Application Layer</td><td>Application</td></tr>
<tr><td colspan="5">BACnet Network Layer</td><td>Network</td></tr>
<tr><td colspan="2">ISO8802-2
(IEEE802.2) Type1</td><td>MS/TP</td><td>PTP</td><td rowspan="2">LonTalk</td><td>Data Link</td></tr>
<tr><td>ISO8802-3
(IEEE802.3)</td><td>ARCNET</td><td>EIA-485
(RS485)</td><td>EIA-232
(RS232)</td><td>Physical</td></tr>
</table>

6.2 Object and Property of BACnet Protocol

6.2.1 Definition of BACnet Object

BACnet defines a group of objects with property to represent any functions of building self-control equipment, thus provide a standard method to represent building self-control equipment. The BACnet gateway defines 9 objects, the enumeration number, name and application sample of these objects are introduced as follows.

No.	Object name	Application sample
0	Analog Input	Sensor input.
1	Analog Output	Control output.
2	Analog Value	The set valve value or other analog control system parameter.
3	Binary Input	Switch input.
4	Binary Output	Relay output.
5	Binary Value	Digital control system parameter.
13	Multi-state Input	Indicate a multi-state processing program situation, such as open/close refrigerator and defrosting cycle etc.
14	Multi-state Output	Indicate a multi-state processing program expectation status, e.g. started cooling time for refrigerator.
19	Multi-state Value	Indicate a multi-state processing program parameter, such as AC fan speed setting and mode setting, etc.
40	CharacterString Value	Represent a character parameter, for example, the unlock password and serial number

Each object has a set of property,the property value describes the features and functions of the objects.

6.2.2 Table of BACnet Protocol Point

One BACnet object ID is consist of the following 5 parts:

BACnet object ID(32bits)				
10 bits	3 bits	2 bits	9 bits	8 bits
Reserved	Model series (assigned to be 0) (M)	Equipment type (01,02,03) (D)	Equipment migration(N)	Parameter No.(P)

Model series:

Including Gree VRF(0), split type unit (1) and U-Match series (2)…

Equipment type:

Include the gateway itself (0), IDU(1), ODU(2) and others (3)(I0 module). **Equipment migration:** for IDU object, it means the IDU No.;

Parameter number:

The sequence of parameter number after data conversion;

ID value of BACnet object:

BACnet ID = P+N*256+D*256*512+M*256*512*4;

For example indoor ambient temperature of object;

(IndoorUnitAmbientTemp_01_01_01), its BACnet object ID is.

(IndoorUnitAmbientTemp_01_01_01) with the following meaning:

BACnet object ID(32bits)				
10 bits	3 bits	2 bits	9 bits	8 bits
Reserved	Model series (assigned to be 0)(M)	Equipment type(01,02,03)(D)	Equipment migration(N)	Parameter No.(P)
0	0:Multi VRF	1:IDU	1	1

If the value of initial IDU engineering code object.

(FirstIndoorUnitNum_01_00_00 with object ID of 1) of this BACnet gateway is M, then IndoorUnitAmbientTemp_01_01_01(131329)represents a IDU parameter with the engineering code of (M+1).

Notice: for unit(RS485 Bus), equipment type 1 is the unit, 2 is for reservation.

Attachment A TCP/IP Setting

Take Windows 7 as an example to demonstrate the configuration process of TCP/IP.

(1) Conduct property configuration of local connection.

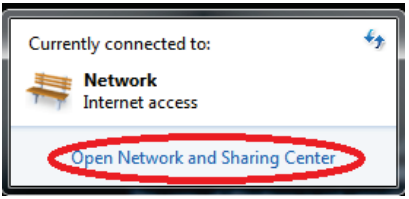

↓

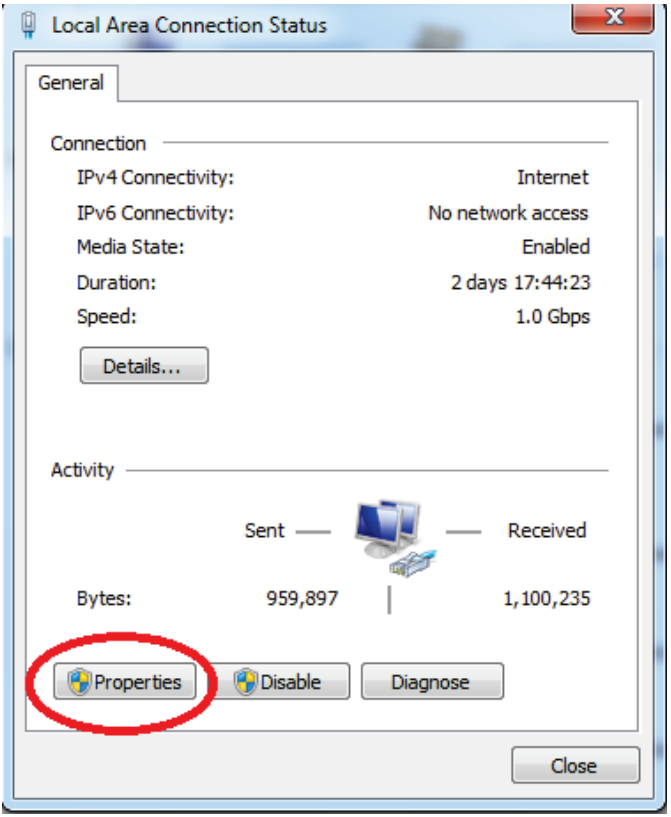

(2) Choose the item: Internet protocol (TCP/IP).

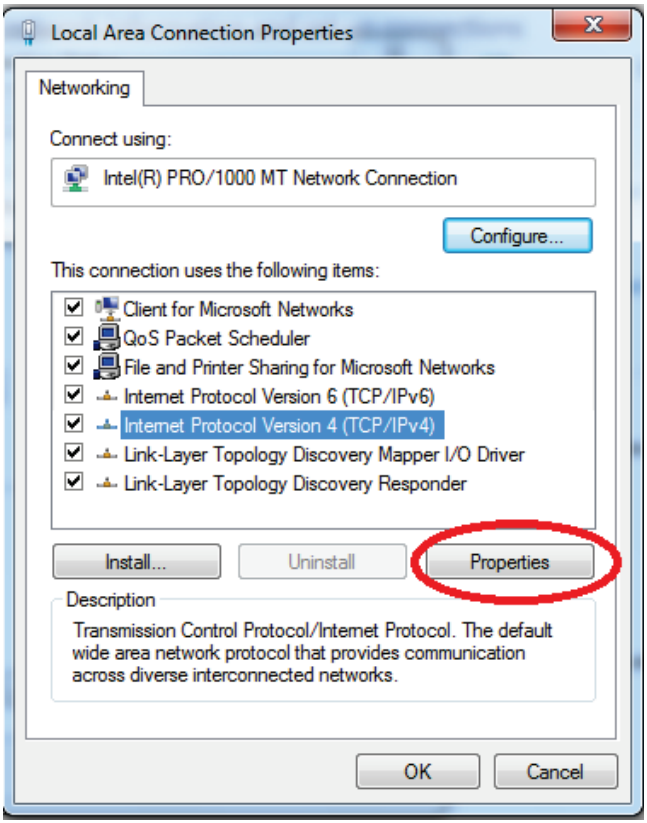

(3) Conduct TCP/IP property setting as shown in the fig(The device that connects network gateway must be consistent with the network address of the gateway).

(4) No additional configuration for DNS server, computer default setting can be retained.

(5) Click “Yes” to complete the configuration.

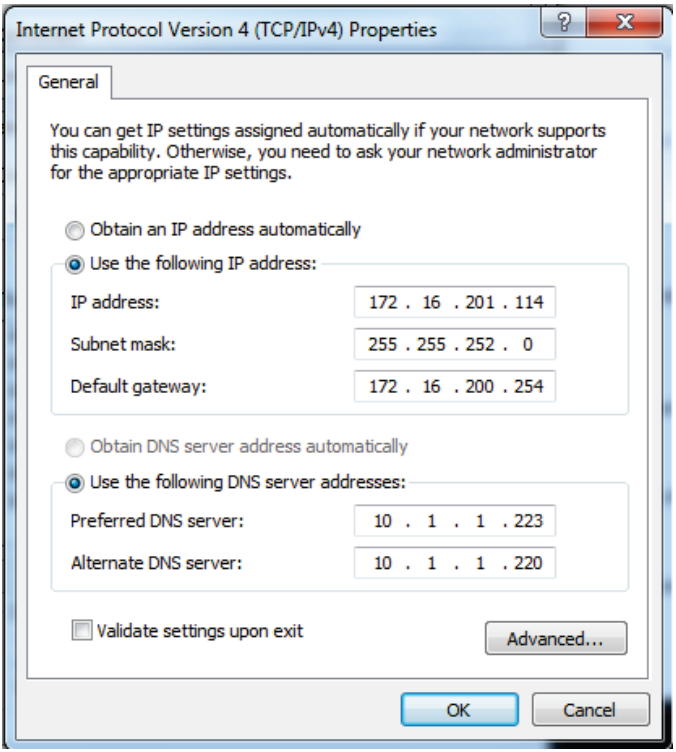
Internet Protocol Version 4 (TCP/IPv4) Properties
General
You can get IP settings assigned automatically if your network supports this capability. Otherwise, you need to ask your network administrator for the appropriate IP settings.
Obtain an IP address automatically
Use the following IP address:
IP address: 172 . 16 . 201 . 114
Subnet mask: 255 . 255 . 252 . 0
Default gateway: 172 . 16 . 200 . 254
Obtain DNS server address automatically
Use the following DNS server addresses:
Preferred DNS server: 10 . 1 . 1 . 223
Alternate DNS server: 10 . 1 . 1 . 220
Validate settings upon exit
Advanced...
OK
Cancel

Attachment B Applicable Model

Model for residential split type:

Model	Indoor unit finished product code	Indoor unit model
Hansol	CB412N02103	GWH09TB-D3DNA3A/I(WIFI)
	CB412N02203	GWH12TB-D3DNA3A/I(WIFI)
	CB412N02802	GWH18TC-D3DNA3D/I(WIFI)
	CB412N02702	GWH24TD-D3DNA3D/I(WIFI)
Lomo 16	CB425N06500	GWC09QB-A3DNA5E/I top(display on the right)(WIFI)(wired controller reserved)
	CB425N06400	GWH09QB-A3DNA5E/I top(display on the right)(WIFI)(wired controller reserved)
	CB425N06201	GWC12QC-A3DNA5E/I(display on the right)(WIFI)(wired controller reserved)
	CB425N06300	GWH12QC-A3DNA5E/I top(display on the right)(WIFI)(wired controller reserved)
	CB425N04302	GWH09QB-D3DNA5E/I(WIFI)(display on the right)(wired controller reserved)
	CB425N04601	GWC09QB-D3DNA5E/I(display on the right)(WIFI)(wired controller reserved)
	CB425N04503	GWH12QC-D3DNA5E/I(display on the right)(WIFI)(wired controller reserved)
	CB425N04402	GWC12QC-D3DNA5E/I(wifi)(display on the right)(wired controller reserved)
	CB425N04703	GWH18QD-D3DNA5E/I(display on the right)(WIFI)(wired controller reserved)
	CB425N04802	GWC18QD-D3DNA5E/I(WIFI)(display on the right)(wired controller reserved)
	CB425N05003	GWH24QE-D3DNA5E/I(display on the right)(wired controller reserved)(WIFI)
	CB425N04902	GWC24QE-D3DNA5E/I(display on the right)(wired controller reserved)(WIFI)
	CB433N00202	GWH30LB-D3DNB2G/I(wired controller reserved)(WIFI)
	CB433N00102	GWC30LB-D3DNB2G/I(wired controller reserved)(WIFI)
	CB433N00402	GWH36LB-D3DNB2G/I(wired controller reserved)(WIFI)
	CB433N00302	GWC36LB-D3DNB2G/I(wired controller reserved)(WIFI)

Model	Indoor unit finished product code	Indoor unit model
Lomo 23	CB425N04001	GWH09QC-A3DNA5D/I(WIFI)(display on the right)(wired controller reserved)
	CB425N05600	GWC09QC-A3DNA5D/I top(WIFI)(display on the right)
	CB425N04101	GWH12QC-A3DNA5D/I(WIFI)(display on the right)(wired controller reserved)
	CB425N05500	GWC12QC-A3DNA5D/I top(display on the right)(WIFI)
	CB425N05900	GWH09QC-D3DNA5D/I top(WIFI)(display on the right)(wired controller reserved)
	CB425N05800	GWC09QC-D3DNA5D/I top(WIFI)(display on the right)
	CB425N05700	GWH12QC-D3DNA5D/I top(WIFI)(display on the right)(wired controller reserved)
	CB425N01901	GWC12QC-D3DNA5D/I(display on the right)(wifi)
	CB425N06000	GWH18QD-D3DNA5G/I top(display on the right)(wired controller reserved)(new E-star)(WIFI)
	CB425N02001	GWC18QD-D3DNA5D/I(display on the right)(WIFI)
	CB425N03901	GWH24QE-D3DNA5D/I(display on the right)(WIFI)(wired controller reserved)
	CB425N06100	GWC24QE-D3DNA5G/I top(display on the right)(wired controller reserved)(new E-star)(WIFI)
MW-Series Free Match 2&3	CN610N0060	GTH(09)BA-D3DNA1A/I top
	CN610N0070	GTH(12)BA-D3DNA1A/I top
	CN610N0050	GTH(18)BA-D3DNA1A/I top
	CN610N0080	GTH(24)BA-D3DNA1A/I top
	CN210N0070	GFH(09)EA-D3DNA1A/I top
	CN210N0060	GFH(12)EA-D3DNA1A/I top
	CN210N0080	GFH(18)EA-D3DNA1A/I top
	CN210N0090	GFH(21)EA-D3DNA1A/I top
	CN210N0100	GFH(24)EA-D3DNA1A/I top
	CN510N0060	GKH(12)BA-D3DNA2A/I(main body) top
	CN510N0070	GKH(18)BA-D3DNA2A/I(main body) top
	CN510N0080	GKH(24)BA-D3DNA1A/I(main body) top

Notice: This gateway with the above models to use, must match the latest XK76 wired controller that can access to BACnet Gateway.

Model for U-Match：

	Duct type	Floor ceiling type	Cassette type
Old models (additional modbus gateway is not needed)	GFH****	GTH****	GKH****
	GFH***	GUD60ZD/A-T(S)	GUD60T/A-T(S)
	GFH***		
	GUD60PHS/A-T(S)		
	GUD60PH/A-T(S)		
New models (additional modbus gateway is needed)	GUD**P****	GUD**ZD***	GUD**T***
	GU**P***	GU**ZD***	GU**T***

Model for Rooftop unit:

	unit model	finished product code
Old models (additional modbus gateway is not needed)	GK-C05TC3AH	EJ51000500
	GK-H05TH3AX	EJ51000520
	GK-H08TH3AX	EJ51000540
	GK-H15TH3AX	EJ51000530
New models (additional modbus gateway is needed)	GK-H25TH3AX	EJ51000690
	GK-H03NH3AS	EJ51000660
	GK-H5.5NH3AF	EJ51000650
	GK-H5.5NH3AS	EJ51000740
	GK-H10NH3AF	EJ51000710
	GK-H15NH3AF	EJ51000700
	GK-H20NH3AF	EJ51000720

Modbus Gateway:

unit model	finished product code
ME50-00/EG(M)	NC20000010

Model for Centrifugal Chiller：

unit model
N81 C Series Centrifugal Chiller
N82 CC Series Magnetic Suspension Inverter Centrifugal Chiller
N83 CT Series High-efficiency Centrifugal Chiller
N84 CVE Permanent-magnet Synchronous Inverter Centrifugal Chiller
N85 CVT High-efficiency Permanent-magnet Synchronous Inverter Centrifugal Chiller
N86 CVP Permanent-magnet Synchronous Inverter Centrifugal Heat Pump Air Conditioner
N87 CVS PV Direct-driven Inerter Centrifugal Chiller
N88 Magnetic Suspension Centrifugal Water-cooled Chiller
N89 CE Series Centrifugal Chiller
N8A CVI Permanent-magnet Synchronous Inverter Centrifugal Ice-storage Chiller
N8BCI Series Centrifugal Ice-storage Chiller

Model for Air-cooled Screw Chillers：

unit model	finished product code
LSBLGRF440MH/NbA-M	EL03500960
LSBLGF470MH/NbA-M	EL03500760

Model for Water-cooled Screw Chiller：

LHE High-efficiency Cooling Only		LHI High-efficiency Ice-storage		LSHE High-efficiency Energy Recovery		LSHE High-efficiency Heat Pump	
Old model	New model	Old model	New model	Old model	unit model	Old model	Unit model
LSBLG 270HE/ Nb	LHE353 CE5AE2/ Nb	/	LHI443C E5AE2/N b	LSBLG2 70HQE/ Nb	LHE433 CE5EE3 Q/Nb	SSD290 0DHE/Nb	/
LSBLG 300HE/ Nb	LHE353 CE4AE1 E/Nb	/	LHI443C E4AE1E/ Nb	LSBLG2 90HQE/ Nb	LHE443 CE4EE2 Q/Nb	SSD315 0DHE/Nb	/
LSBLG 350HE/ Nb	LHE533 CE3CE3/ Nb	/	LHI523C E3CE3/N b	LSBLG3 00HQE/ Nb	LHE443 CE4EE1 EQ/Nb	SSD350 0DHE/Nb	/
LSBLG 380HE/ Nb	LHE553 CE2CE2/ Nb	/	LHI533C E2CE2/N b	LSBLG3 60HQE/ Nb	LHE523 CE3EE3 Q/Nb	SSD400 0DHE/Nb	/
LSBLG 430HE/ Nb	LHE553 CE1CE1 E/Nb	/	LHI533C E1CE1E/ Nb	LSBLG4 00HQE/ Nb	LHE533 CE2EE2 Q/Nb	SSD420 0DHE/Nb	/
LSBLG 460HE/ Nb	LHE643 EE7EE7/ Nb	/	LHI723E E7EE7/N b	LSBLG4 20HQE/ Nb	LHE533 CE1EE1 EQ/Nb	SSD460 0DHE/Nb	/
LSBLG 490HE/ Nb	LHE653 EE6EE6/ Nb	/	LHI743E E6EE6/N b	LSBLG4 60HQE/ Nb	LHE723 EE6GE3 Q/Nb	SSD490 0DHE/Nb	/
LSBLG 550HE/ Nb	LHE653 EE5EE5 E/Nb	/	LHI743E E5EE5E/ Nb	LSBLG5 10HQE/ Nb	LHE743 EE5GE2 Q/Nb	SSD540 0DHE/Nb	/

LHE High-efficiency Cooling Only		LHI High-efficiency Ice-storage		LSHE High-efficiency Energy Recovery		LSHE High-efficiency Heat Pump	
Old model	New model	Old model	New model	Old model	unit model	Old model	Unit model
LSBLG 600HE/ Nb	LHE822 EE4EE4/ Nb	/	LHI833E E4EE4/N b	LSBLG5 30HQE/ Nb	LHE743 EE4GE1 EQ/Nb	SSD600 0DHE/Nb	/
LSBLG 670HE/ Nb	LHE832 EE3EE3/ Nb	/	LHI843E E3EE3/N b	LSBLG5 90HQE/ Nb	LHE833 EE3GE3 Q/Nb	SSD630 0DHE/Nb	/
LSBLG 705HE/ Nb	LHE832 EE2EE2 E/Nb	/	LHI523G F2EF2-2/Nb	LSBLG6 20HQE/ Nb	LHE843 EE2GE2 Q/Nb	SSD670 0DHE/Nb	/
LSBLG 750HE/ Nb	LHE862 EE1EE1 E/Nb	/	LHI533G F2EF2-2/Nb	LSBLG6 50HQE/ Nb	LHE843 EE1GE1 EQ/Nb	SSD730 0DHE/Nb	/
LSBLG 700HE/ Nb	LHE533 GF2EF2-2/Nb	/	LHI533G F1EF1E-2/Nb	LSBLG7 20HQE/ Nb	LHE523 GF2HF3 Q-2/Nb	SSD780 0DHE/Nb	/
LSBLG 760HE/ Nb	LHE553 GF2EF2-2/Nb	/	LHI723G H3GH6-2/Nb	LSBLG7 90HQE/ Nb	LHE533 GF1HF2 Q-2/Nb	SSD840 0DHE/Nb	/
LSBLG 850HE/ Nb	LHE553 GF1EF1 E-2/Nb	/	LHI743G H2GH5-2/Nb	LSBLG8 20HQE/ Nb	LHE533 GF1HF1 EQ-2/Nb	SSD930 0DHE/Nb	/
LSBLG 920HE/ Nb	LHE643 GH3GH6 -2/Nb	/	LHI743G H1GH4E -2/Nb	LSBLG9 20HQE/ Nb	LHE723 GH3JH3 Q-2/Nb	SSD970 0DHE/Nb	/
LSBLG 980HE/ Nb	LHE653 GH2GH5 -2/Nb	/	LHI833H J3GJ3-2/Nb	LSBLG1 020HQE/ Nb	LHE743 GH2JH2 Q-2/Nb	SSD110 00DHE/N b	/
LSBLG 1100H E/Nb	LHE653 GH1GH4 E-2/Nb	/	LHI843H J2GJ2-2/Nb	LSBLG1 100HQE/ Nb	LHE743 GH1JH1 EQ-2/Nb	SSD120 00DHE/N b	/
LSBLG 1200H/ Nb	LHE822 HJ3GJ3-2/Nb	/	LHI843H J1GJ1E-2/Nb	LSBLG1 180HQE/ Nb	LHE833 HJ3KJ3 Q-2/Nb	SSD125 00DHE/N b	/
LSBLG 1300H/ Nb	LHE832 HJ2GJ2-2/Nb			LSBLG1 250HQE/ Nb	LHE843 HJ2KJ2 Q-2/Nb	SSD135 00DHE/N b	/
LSBLG 1400H/ Nb	LHE832 HJ1GJ1 E-2/Nb			LSBLG1 320HQE/ Nb	LHE843 HJ1KJ1E Q-2/Nb	SSD150 00DHE/N b	/
LSBLG 1480H/ Nb	LHE842 HJ1GJ1 E-2/Nb						
/	LHE932 EE9EE9 E/Nb						
/	LHE942 HE3GE3/ Nb						
/	LHE952 HE2GE2/ Nb						

LHE High-efficiency Cooling Only		LHI High-efficiency Ice-storage		LSHE High-efficiency Energy Recovery		LSHE High-efficiency Heat Pump	
Old model	**New model**	**Old model**	**New model**	**Old model**	**unit model**	**Old model**	**Unit model**
/	LHE952 HE1GE1 E/Nb						
/	LHE932 KK3JK3-2/Nb						
/	LHE932 KK4JK4-2/Nb						
/	LHE942 KK2JK2-2/Nb						
/	LHE952 KK1JK1 E-2/Nb						
/	LHE952L K1JK5E-2/Nb						

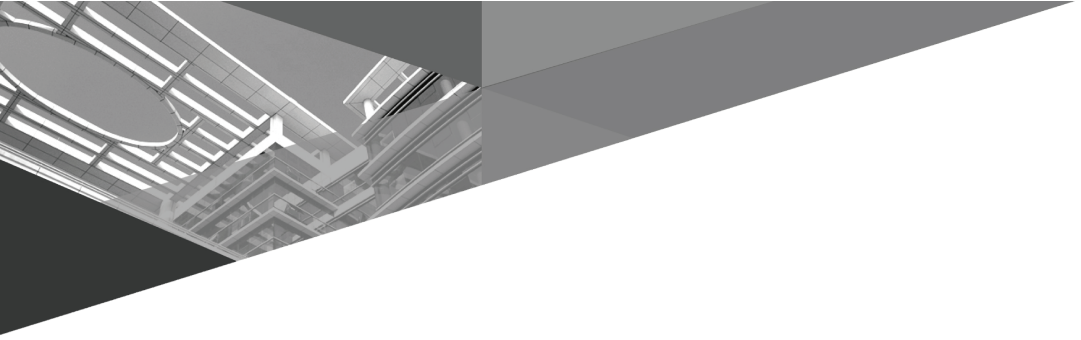

GREE ELECTRIC APPLIANCES, INC. OF ZHUHAI

Add: West Jinji Rd, Qianshan, Zhuhai,Guangdong, China, 519070
Tel: (+86-756) 8522218
Fax: (+86-756) 8669426
E-mail: gree@gree.com.cn www.gree.com

600005000894